March 4, 1958

A. J. MARON, JR

WEATHERPROOF ENCLOSURE PRIMARILY FOR ELECTRICAL APPARATUS

2,825,483

Filed Feb. 1, 1956

2 Sheets-Sheet 1

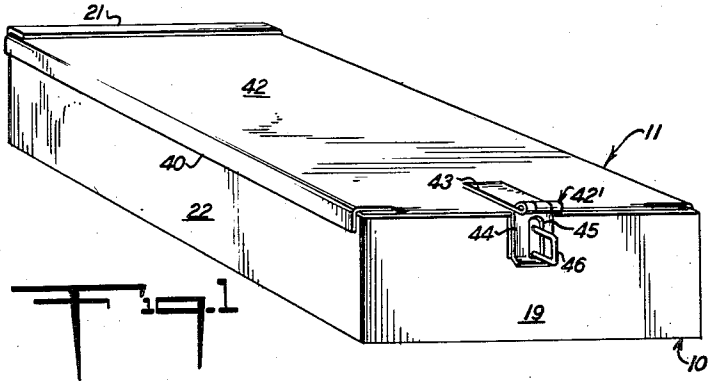

Fig. 1

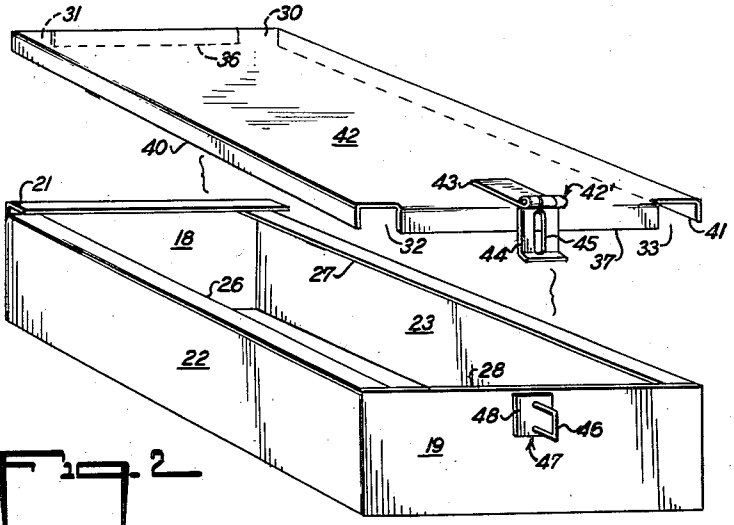

Fig. 2

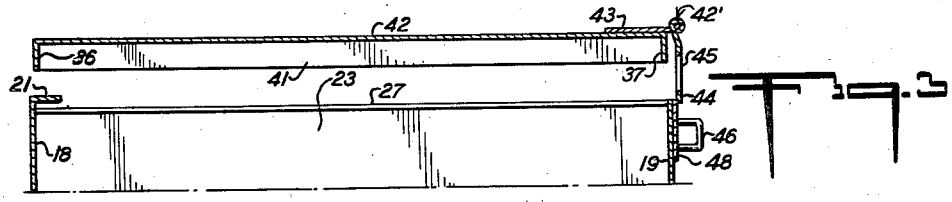

Fig. 3

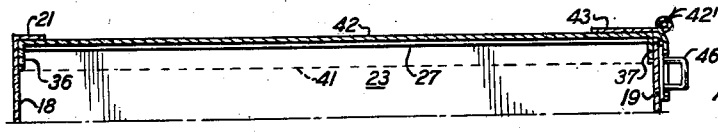

Fig. 4

INVENTOR

ANDREW J. MARON JR

BY

Jacobi & Jacobi

ATTORNEYS

March 4, 1958 A. J. MARON, JR 2,825,483

WEATHERPROOF ENCLOSURE PRIMARILY FOR ELECTRICAL APPARATUS

Filed Feb. 1, 1956 2 Sheets-Sheet 2

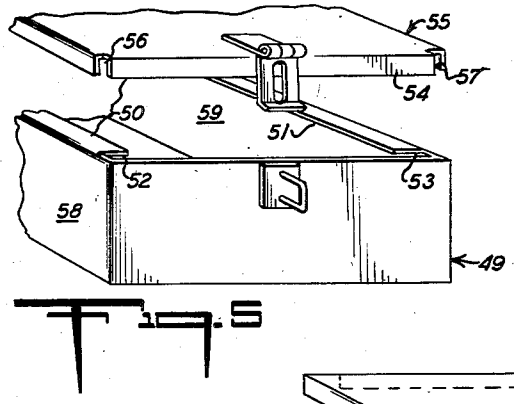

FIG. 5

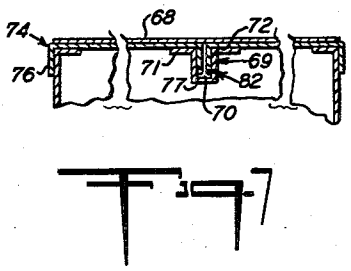

FIG. 7

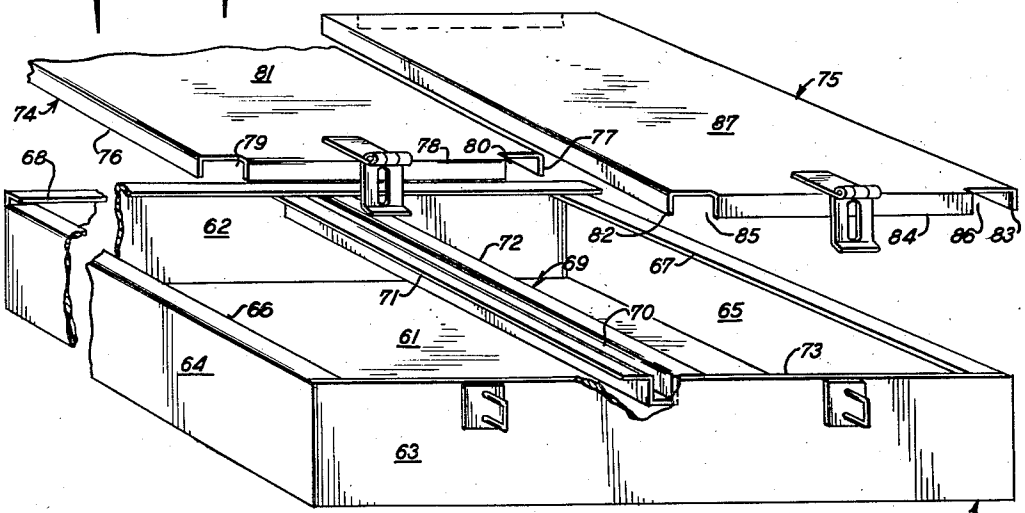

FIG. 6

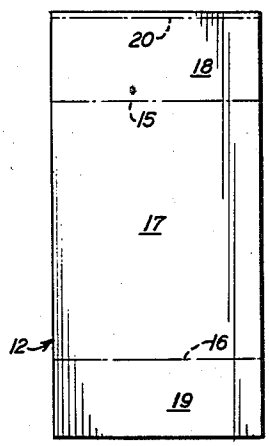

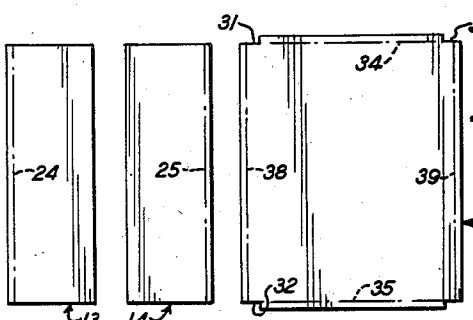

FIG. 8

INVENTOR

ANDREW J. MARON JR

BY Jacobi & Jacobi

ATTORNEYS

United States Patent Office 2,825,483 Patented Mar. 4, 1958

2,825,483

WEATHERPROOF ENCLOSURE PRIMARILY FOR ELECTRICAL APPARATUS

Andrew J. Maron, Jr., Bordentown, N. J.

Application February 1, 1956, Serial No. 562,801

12 Claims. (Cl. 220—29)

This invention relates to protective devices and more particularly to a weatherproof enclosure primarily intended to receive electrical apparatus to protect the same from the weather and to prevent unauthorized access thereto and although the same is primarily intended for electrical apparatus, nevertheless, if desired, other devices may be mounted therein where protection and unauthorized access is of importance.

Heretofore, numerous types of weatherproof enclosures have been designed and utilized, but many of these were relatively complex and costly and access thereto was rendered difficult by the fact that the covers were frequently secured in place by screw threaded fasteners, such as bolts or the like, and also it was necessary to carefully preserve the gaskets which were utilized to render the enclosure weatherproof.

It is accordingly an object of this invention to provide a weatherproof enclosure which may be conveniently and economically constructed from metal blanks which are stamped and formed in relatively simple stamping operations and requiring relatively simple and inexpensive dies.

A further object of the invention is the provision of a weatherproof enclosure in which a container is formed of three blanks welded together to provide a unitary structure and in which a cover is conveniently assembled therewith and removably held in position to provide a weatherproof enclosure and to prevent unauthorized access to the interior thereof.

A still further object of the invention is the provision of a weatherproof enclosure incorporating a container formed of three generally rectangular metal blanks welded together to provide a unitary structure and a generally rectangular cover formed from a single metal blank and with notches of uniform size and shape formed in the corners of the cover blank.

Another object of the invention is the provision of a weatherproof enclosure, including a container and a cover and in which the cover may be retained in closing position and unauthorized access prevented by means of a single easily removable blocking device.

A further object of the invention is the provision of a weatherproof enclosure including a container which may be of any desired size to accommodate the required apparatus and in which a plurality of covers of convenient size may be provided and applied to the container to close the same and in which, such covers may be removed and applied independently, in order to afford access to a portion only of the container.

Further objects and advantages of the invention will be apparent from the following description taken in conjunction with the accompanying drawing wherein;

Fig. 1 is a view in perspective showing a weatherproof enclosure constructed in accordance with this invention;

Fig. 2, an exploded perspective view showing the container with the cover removed and the configuration of the cover which adapts the same with assembly with the container;

Fig. 3, a longitudinal sectional view showing the container and cover prior to assembly;

Fig. 4, a longitudinal sectional view, similar to Fig. 3, but showing the cover assembled with the container;

Fig. 5, a fragmentary perspective exploded view showing a slightly modified form of the invention;

Fig. 6, an exploded perspective view showing a further modified form of the invention in which a plurality of covers are utilized to close the container and in which a bridging member is installed in the container to receive the side flanges of the covers;

Fig. 7, a transverse sectional view of the form of the invention shown in Fig. 6 and showing the position occupied by the covers in closing position and the manner in which the bridging member cooperates with the side flanges of the cover to provide a weatherproof enclosure; and

Fig. 8, a plan view of the blanks utilized to construct the enclosure shown in Fig. 1.

With continued reference to the drawing there is shown a weatherproof enclosure constructed in accordance with this invention and primarily intended to receive electrical apparatus, although, if desired, other types of apparatus may be enclosed therein. The enclosure of this invention may well comprise a container 10 and a removable cover 11 and, as shown in Fig. 8, the container may be formed from three generally rectangular metallic blanks 12, 13 and 14. It is to be noted, that the blanks 12, 13 and 14 may be cut from flat sheet material and that the same are merely rectangular in shape requiring no special dies for cutting or forming the same. The blank 12 may be bent along the lines 15 and 16 to provide a rear wall 17, a top wall 18 and a bottom wall 19. The top wall 18 may be bent along a line 20 to provide a cover retaining flange 21, as best shown in Figs. 2, 3 and 4. The blanks 13 and 14 provide side walls 22 and 23 and are bent along lines 24 and 25 respectively, to provide front flanges 26 and 27, as best shown in Fig. 2. It is to be noted, that the cover retaining flange 21 overhangs the front flanges 26 and 27 and is spaced forwardly thereof for a purpose to be presently described. The blanks 13 and 14 are preferably welded to the blank 12 along the side edges thereof, to provide a water-tight unitary container structure 10.

As will be seen from an inspection of Fig. 2, the front surfaces of the front flanges 26 and 27 are substantially in alignment with the front edge 28 of the bottom wall 19 and it is further to be noted, that while for convenience, the enclosure of this invention is shown in the drawing in horizontal position, it is to be understood, that the same is normally mounted in a vertical position with the wall 19 located at the bottom and the wall 18 located at the top and the enclosure may be conveniently mounted by suitable fastening means, not shown, extending through the rear wall 17, although the enclosure may, of course, be mounted in any other desired or suitable manner. Also, electrical apparatus, not shown, or any other devices may be mounted in any desired manner within the container 10 and access thereto may be had through the open front of the container.

The open front of the container 10 may be conveniently closed by a removable cover 11 and, as shown in Fig. 8, such cover may be formed from a single metallic blank 29 which may comprise a stamping with similar uniform rectangular notches 30, 31, 32 and 33 provided at each corner. The blank 29 may be bent along lines 34 and 35 to provide top and bottom rearwardly extending flanges 36 and 37 respectively and also the blank 29 may be bent along lines 38 and 39 to provide rearwardly extending side flanges 40 and 41. The central portion of the blank 29 provides a front wall 42 for the container 10 when the cover 11 is in place thereon.

The cover 11 may be assembled with the container 10

by placing the upper edge thereof in contact with the front flanges 26 and 27 below the overhanging cover retaining flange 21 and with the front flanges 26 and 27 received in the notches 30 and 31 of the cover 11. The cover is held in an outwardly and downwardly inclined position and moved upwardly between the cover retaining flange 21 and the front flanges 26 and 27. When the upper edge of the cover 11 contacts the top wall 18 of the container 10, the cover may be swung inwardly with the notches 32 and 33 receiving the front flanges 26 and 27 and with the bottom flange 37 extending within the container 10 and contacting the inner upper surface of the bottom wall 28.

The cover 11 may be held in position on the container 10 and prevent unauthorized access thereto by means of a hasp 42' having a butt portion 43 secured to the front wall 42 of the cover 11 by welding or any other suitable means and having a hinged portion 44 provided with a slot 45 therein to receive a loop 46 of an eye portion 47 having a base 48 secured to the lower surface of the bottom wall 19 in any suitable manner, such as by welding. If desired, a padlock or other suitable locking means may be received on the loop 46 to prevent movement of the hinged portion 44 of the hasp 42' and removal of the cover 11 from the container 10.

It is to be noted that the side flanges 40 and 41 of the cover 11 embrace the side walls 22 and 23 of the container 10 and since, the upper edge of the cover 11 is completely covered by the overhanging cover retaining flange 21, a weatherproof enclosure is provided. The notches 32 and 33 serve to permit ventilation of the interior of the container 10 and also permit drainage of any moisture which may be formed by condensation or the like within such container. The cover 11 may, of course, be conveniently removed from the container by releasing the hinged portion 44 of the hasp 42' and moving the lower portion of the cover 11 forwardly and thereafter downwardly to free the same from the overhanging cover retaining flange 21, at which time the cover may be entirely removed from the container 10.

With particular reference to Fig. 5, there is shown a slightly modified form of weatherproof enclosure constructed in accordance with this invention and in which a container 49 is provided which is substantially similar to the container 10 as described above, except that front flanges 50 and 51 are provided with notches 52 and 53 adjacent the lower ends thereof. The bottom flange 54 of the cover 55 is provided with notches 56 and 57 at each end thereof and it is to be noted, that these notches 56 and 57 are of sufficient length to accommodate the side walls 58 and 59 of the container 49 and that the notches 52 and 53 in the front flanges 50 and 51 are of sufficient length to accommodate the bottom flange 54 of the cover 55. The upper end of the container 49 and of the cover 55 are formed in the same manner as described above, in connection with the first form of the invention and the application and removal of the cover 55 to the container 49 is the same as described above. The main advantage of this form of the invention is the fact that the notches 52 and 53 in the front flanges 50 and 51 permit more adequate drainage from the lower portion of the container 49 and prevent the formation of pockets rearwardly of the front flanges 50 and 51, as might be the case in the first form of the invention.

Since, it is sometimes desirable to provide a relatively large container in which may be installed different types of electrical apparatus or other devices and in which it may only be necessary to have access to one or more of such devices at any given time, it is also contemplated by this invention to provide such a container and a plurality of covers, any one of which may be removed at any given time. As best shown in Figs. 6 and 7, a container 60 of any desired size may be provided and such container may be formed with a rear wall 61, top and bottom walls 62 and 63 respectively and side walls 64 and 65. The container 60 is formed in the same manner as described above in connection with the first form of the invention and there may be provided front flanges 66 and 67 on the front edges of the side walls 64 and 65 respectively, as well as a downwardly extending overhanging cover retaining flange 68 formed on the front edge of the top wall 62.

A bridging member 69 extends between the top wall 62 and bottom wall 63 within the container 60 and may be secured to such top and bottom wall by welding or any other suitable means. While one bridging member 69 is shown for purposes of illustration, it is to be understood, that as many such bridging members as necessary may be provided within the container 60. The bridging member 69 is provided with a forwardly opening channel 70 extending throughout the length thereof and also with laterally extending cover supporting flanges 71 and 72. It is to be noted, that the cover supporting flanges 71 and 72 are substantially in the same plane as the front flanges 66 and 67 and substantially in alignment with the front edge 73 of the bottom wall 63.

A pair of removable covers 74 and 75 are provided, each of which is identical with the cover 11 described above in connection with the first form of the invention and the cover 74 may be provided with rearwardly extending side flanges 76 and 77 and a bottom flange 78 with the bottom flange provided at each end thereof with notches 79 and 80. The central portion 81 of the cover 74 provides a front wall for a portion of the container 60. Similarly, the cover 75 is provided with side flanges 82 and 83 and a bottom flange 84 and the bottom flange 84 is provided at each end thereof with notches 85 and 86. The central portion 87 of the cover 75 provides a front wall for the remainder of the container 60.

The covers 74 and 75 are applied to the container 60 in the same manner as described above in connection with the first form of the invention and it is to be noted, that the notch 79 in the cover 74 serves to receive the front flange 66, while the notch 80 in the cover 74 serves to receive the cover supporting flange 71 on the bridge member 69 with the side flange 77 of the cover 74 received in the channel 70 of the bridge member 69. Similarly, the cover 75 is applied to the container 60 with the front flange 67 received in the notch 86 and with the cover supporting flange 72 of the bridge member 69 received in the notch 85. The side flange 82 of the cover 75 is received in the channel 70 of the bridge member 69, as clearly shown in Fig. 7. The side flange 76 of the cover 74 overlaps and embraces the side wall 64 of the container 60 and the side flange 83 of the cover 75 overlaps and embraces the side wall 65 in the same manner as described above in connection with the first form of the invention. As stated above, as many bridge members 69 as desired may be installed in the container 60 and as many covers as necessary utilized to close the front thereof. In this way, the covers may be kept to a reasonable size and where desired, only one cover need be removed in order to provide access to that portion of the container.

It will be seen that by the above described invention, there has been provided a relatively simple and economical weatherproof enclosure, yet one which adequately protects apparatus or devices installed therein and which, at the same time, permits convenient access to the interior of the enclosure and likewise prevents unauthorized access thereto. The enclosure may be manufactured by relatively simple, stamping, bending and welding operations thereby permitting large scale production and sale in a highly competitive market.

It will be obvious to those skilled in the art that various changes may be made in the invention without departing from the spirit and scope thereof and therefore the invention is not limited by that which is shown in the drawing and described in the specification, but only as indicated in the appended claims.

What is claimed is:

1. A weatherproof enclosure comprising a generally rectangular container for vertical mounting and open at the front, top, rear and bottom walls of one-piece integral construction, side walls secured to said top, rear and bottom walls along the side edges thereof, inwardly extending front flanges on the front edges of said side walls, the front surfaces of said flanges being substantially in alignment with the front edge of said bottom wall, an overhanging downwardly extending cover retaining flange on the front edge of said top wall, said retaining flange being spaced forwardly of said front flanges, a removable cover for the open front of said container providing a front wall, said cover comprising a flat plate disposed between said retaining flange and said front flanges, side flanges on said plate embracing the side walls of said container, top and bottom rearwardly extending flanges on said plate engaging the inner surfaces of said top and bottom walls, notches at each end of said top and bottom flanges for receiving said front flanges and means for releasably retaining said cover in closed position on said container.

2. A weatherproof enclosure comprising a generally rectangular container for vertical mounting and open at the front, top, rear and bottom walls, side walls secured to said top, rear and bottom walls along the side edges thereof, inwardly extending front flanges on the front edges of said sidewalls, the front surfaces of said flanges being substantially in alignment with the front edge of said bottom wall, an overhanging downwardly extending cover retaining flange on the front edge of said top wall, said retaining flange being spaced forwardly of said front flanges, a removable cover for the open front of said container providing a front wall, said cover comprising a flat plate disposed between said retaining flange and said front flanges, side flanges on said plate embracing the side walls of said container, top and bottom rearwardly extending flanges on said plate engaging the inner surfaces of said top and bottom walls, notches at each end of said top and bottom flanges for receiving said front flanges and means for releasably retaining said cover in closed position on said container.

3. A weatherproof enclosure comprising a generally rectangular container for vertical mounting and open at the front, top, rear and bottom walls, side walls secured to said top, rear and bottom walls along the side edges thereof, inwardly extending front flanges on the front edges of said side walls, an overhanging downwardly extending cover retaining flange on the front edge of said top wall, said retaining flange being spaced forwardly of said front flanges, a removable cover for the open front of said container providing a front wall, said cover comprising a flat plate disposed between said retaining flange and said front flanges, side flanges on said plate embracing the side walls of said container, top and bottom rearwardly extending flanges on said plate engaging the inner surfaces of said top and bottom walls, notches at each end of said top and bottom flanges for receiving said front flanges and means for releasably retaining said cover in closed position on said container.

4. A weatherproof enclosure comprising a generally rectangular container for vertical mounting and open at the front, top, rear and bottom walls of one-piece integral construction, side walls secured to said top, rear and bottom walls along the side edges thereof, inwardly extending front flanges on the front edges of said side walls, the front surfaces of said flanges being substantially in alignment with the front edge of said bottom wall, an overhanging downwardly extending cover retaining flange on the front edge of said top wall, said retaining flange being spaced forwardly of said front flanges, a removable cover for the open front of said container providing a front wall, said cover comprising a front plate disposed between said retaining flange and said front flanges, side flanges on said plate embracing the side walls of said container, top and bottom rearwardly extending flanges on said plate engaging the inner surface of said top and bottom walls, notches at each end of said top flange for receiving said front flanges, notches at the lower ends of said front flanges for receiving said bottom flange, notches at each end of said bottom flange for receiving said side walls and means for releasably retaining said cover in closed position on said container.

5. A weatherproof enclosure comprising a generally rectangular container for vertical mounting and open at the front, top, rear and bottom walls, side walls secured to said top, rear and bottom walls along the side edges thereof, inwardly extending front flanges on the front edges of said side walls, the front surfaces of said flanges being substantially in alignment with the front edge of said bottom wall, an overhanging downwardly extending cover retaining flange on the front edge of said top wall, said retaining flange being spaced forwardly of said front flanges, a removable cover for the open front of said container providing a front wall, said cover comprising a front plate disposed between said retaining flange and said front flanges, side flanges on said plate embracing the side walls of said container, top and bottom rearwardly extending flanges on said plate engaging the inner surfaces of said top and bottom walls, notches at each end of said top flange for receiving said front flanges, notches at the lower ends of said front flanges for receiving said bottom flange, notches at each end of said bottom flange for receiving said side walls and means for releasably retaining said cover in closed position on said container.

6. A weatherproof enclosure comprising a generally rectangular container for vertical mounting and open at the front, top, rear and bottom walls, side walls secured to said top, rear and bottom walls along the side edges thereof, inwardly extending front flanges on the front edges of said side walls, an overhanging downwardly extending cover retaining flange on the front edge of said top wall, said retaining flange being spaced forwardly of said front flanges, a removable cover for the open front of said container providing a front wall, said cover comprising a front plate disposed between said retaining flange and said front flanges, side flanges on said plate embracing the side walls of said container, top and bottom rearwardly extending flanges on said plate engaging the inner surface of said top and bottom walls, notches at each end of said top flange for receiving said front flanges, notches at the lower ends of said front flanges for receiving said bottom flange, notches at each end of said bottom flange for receiving said side walls and means for releasably retaining said cover in closed position on said container.

7. A weatherproof enclosure comprising a generally rectangular container for vertical mounting and open at the front, top, rear and bottom walls, side walls secured to said top, rear and bottom walls along the side edges thereof, inwardly extending front flanges on the front edges of said side walls, an overhanging downwardly extending cover retaining flange on the front edge of said top wall, said retaining flange being spaced forwardly of said front flanges, a removable cover for the open front of said container providing a front wall, said cover comprising a front plate disposed between said retaining flange and said front flanges, side flanges on said plate embracing the side walls of said container, top and bottom rearwardly extending flanges on said plate, notches at each end of said top flange for receiving said front flanges, notches at the lower end of said front flanges for receiving said bottom flange, notches at each end of said bottom flange for receiving said side walls and means for releasably retaining said cover in closed position on said container.

8. A weatherproof enclosure comprising a generally rectangular container for vertical mounting and open at the front, top, rear and bottom walls of one-piece integral construction, side walls secured to said top, rear and bottom walls along the side edges thereof, inwardly ex-

tending front flanges on the front edges of said side walls, the front surfaces of said flanges being substantially in alignment with the front edge of said bottom wall, an overhanging downwardly extending cover retaining flange on the front edge of said top wall, said retaining flange being spaced forwardly of said front flanges, a bridge member extending between said top and bottom walls and secured thereto substantially midway between said side walls, said member having a forwardly opening channel and laterally extending cover supporting flanges, said cover supporting flanges being substantially in the same plane as said front flanges, a pair of removable covers for the open front of said container providing a front wall, each cover comprising a flat plate disposed between said retaining flange and one of said front flanges and one of said cover supporting flanges, side flanges on each plate with one side flange embracing a side wall of said container and the other side flange received in the channel of said member, top and bottom rearwardly extending flanges on each plate engaging the inner surfaces of said top and bottom walls, notches at each end of said top and bottom flanges for receiving said front flanges and said cover supporting flanges and means for releasably retaining said covers in closed position on said container.

9. A weatherproof enclosure comprising a generally rectangular container for vertical mounting and open at the front, top, rear and bottom walls, side walls secured to said top, rear and bottom walls along the side edges thereof, inwardly extending front flanges on the front edges of said side walls, the front surfaces of said flanges being substantially in alignment with the front edge of said bottom wall, an overhanging downwardly extending cover retaining flange on the front edge of said top wall, said retaining flange being spaced forwardly of said front flanges, a bridge member extending between said top and bottom walls and secured thereto substantially midway between said side walls, said member having a forwardly opening channel and laterally extending cover supporting flanges, said cover supporting flanges being substantially in the same plane as said front flanges, a pair of removable covers for the open front of said container providing a front wall, each cover comprising a flat plate disposed between said retaining flange and one of said front flanges and one of said cover supporting flanges, side flanges on each plate with one side flange embracing a side wall of said container and the other side flange received in the channel of said member, top and bottom rearwardly extending flanges on each plate engaging the inner surfaces of said top and bottom walls, notches at each end of said top and bottom flanges for receiving said front flanges and said cover supporting flanges and means for releasably retaining said covers in closed position on said container.

10. A weatherproof enclosure comprising a generally rectangular container for vertical mounting and open at the front, top, rear and bottom walls, side walls secured to said top, rear and bottom walls along the side edges thereof, inwardly extending front flanges on the front edges of said side walls, an overhanging downwardly extending cover retaining flange on the front edge of said top wall, said retaining flange being spaced forwardly of said front flanges, a bridge member extending between said top and bottom walls and secured thereto substantially midway between said sidewalls, said member having a forwardly opening channel and laterally extending cover supporting flanges, said cover supporting flanges being substantially in the same plane as said front flanges, a pair of removable covers for the open front of said container providing a front wall, each cover comprising a flat plate disposed between said retaining flange and one of said front flanges and one of said cover supporting flanges, side flanges on each plate with one side flange embracing a side wall of said container and the other side flange received in the channel of said member, top and bottom rearwardly extending flanges on each plate engaging the inner surfaces of said top and bottom walls, notches at each end of said top and bottom flanges for receiving said front flanges and said cover supporting flanges and means for releasably retaining said covers in closed position on said container.

11. A weatherproof enclosure comprising a generally rectangular container for vertical mounting and open at the front, top, rear and bottom walls, side walls secured to said top, rear and bottom walls along the side edges thereof, inwardly extending front flanges on the front edges of said side walls, an overhanging downwardly extending cover retaining flange on the front edge of said top wall, said retaining flange being spaced forwardly of said front flanges, a bridge member extending between said top and bottom walls and secured thereto substantially midway between said side walls, said member having a forwardly opening channel and laterally extending cover supporting flanges, said cover supporting flanges being substantially in the same plane as said front flanges, a pair of removable covers for the open front of said container providing a front wall, each cover comprising a flat plate disposed between said retaining flange and one of said front flanges and one of said cover supporting flanges, side flanges on each plate with one side flange embracing a side wall of said container and the other side flange received in the channel of said member, top and bottom rearwardly extending flanges on each plate, notches at each end of said top and bottom flanges for receiving said front flanges and said cover supporting flanges and means for releasably retaining said covers in closed position on said container.

12. A weatherproof enclosure comprising a generally rectangular container for vertical mounting and open at the front, top, rear and bottom walls, side walls secured to said top, rear and bottom walls along the side edges thereof, inwardly extending front flanges on the front edges of said sidewalls, an overhanging downwardly extending cover retaining flange on the front edge of said top wall, said retaining flange being spaced forwardly of said front flanges, a bridge member extending between said top and bottom walls and secured thereto, said member having a forwardly opening channel and laterally extending cover supporting flange, said cover supporting flanges being substantially in the same plane as said front flanges, a plurality of removable covers for the open front of said container providing a front wall, each cover comprising a flat plate disposed between said retaining flange and one of said front flanges and one of said cover supporting flanges, side flanges on each plate with one side flange embracing a side wall of said container and the other side flange received in the channel of said member, top and bottom rearwardly extending flanges on each plate, notches at each end of said top and bottom flanges for receiving said front flanges and said cover supporting flanges and means for releasably retaining said covers in closed position on said container.

References Cited in the file of this patent

UNITED STATES PATENTS

2,131,641	Sachs	Sept. 27, 1938
2,246,347	Catherwood	June 17, 1941
2,488,710	Cooper	Nov. 22, 1949
2,695,923	Lajeunesse et al.	Nov. 30, 1954
2,779,812	Rowe	Jan. 29, 1957