Sept. 24, 1963 E. J. BARR 3,104,617

DIAPHRAGM PUMP

Filed Aug. 8, 1960 2 Sheets-Sheet 1

FIG. 1.

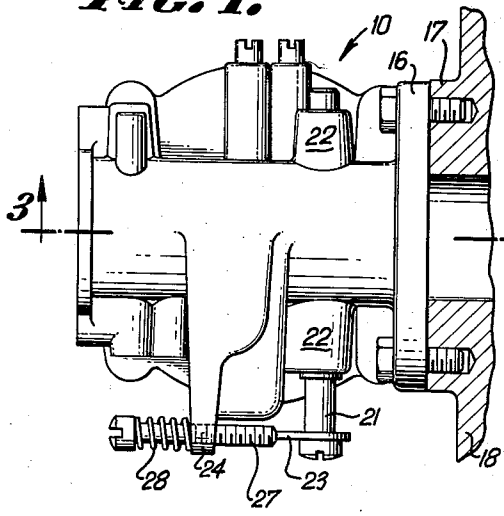

FIG. 2.

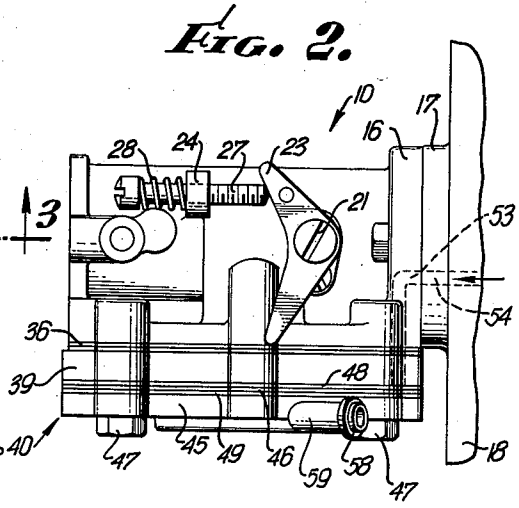

FIG. 3.

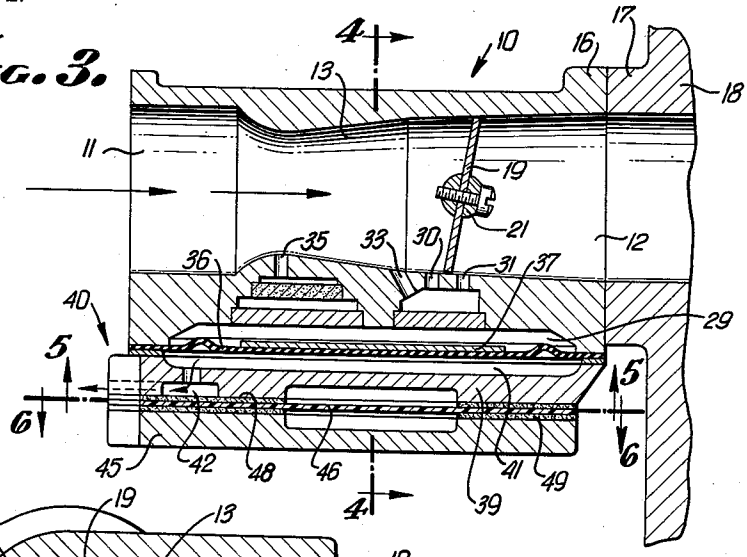

FIG. 4.

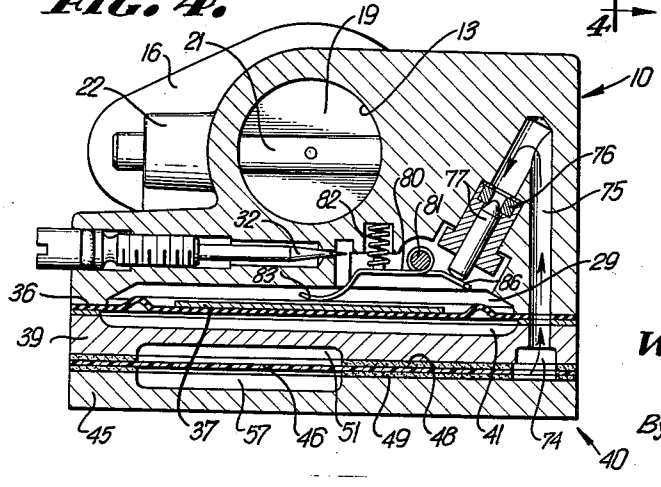

EDWARD J. BARR
INVENTOR.
WHANN & MCMANIGAL
Attorneys for Applicant
By Robert M. McManigal

Sept. 24, 1963 E. J. BARR 3,104,617

DIAPHRAGM PUMP

Filed Aug. 8, 1960 2 Sheets-Sheet 2

FIG. 5.

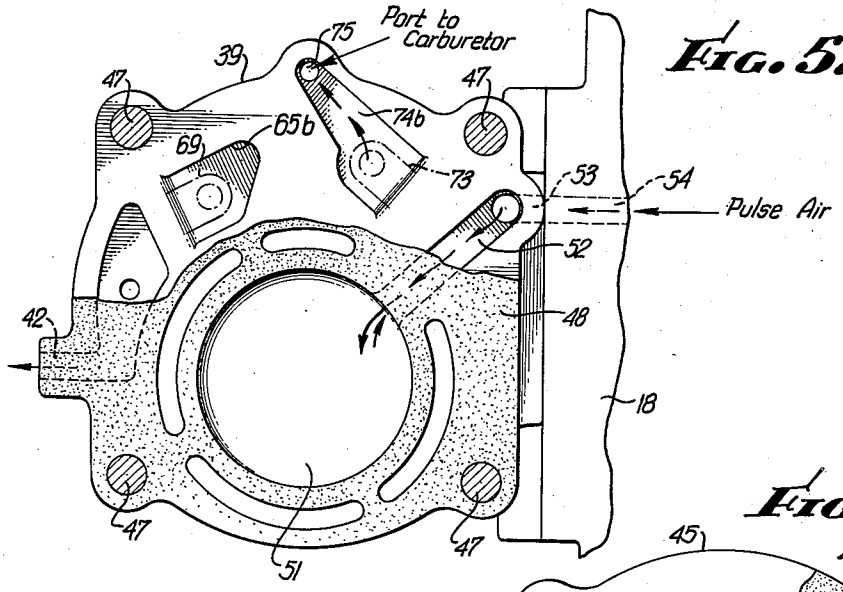

FIG. 6.

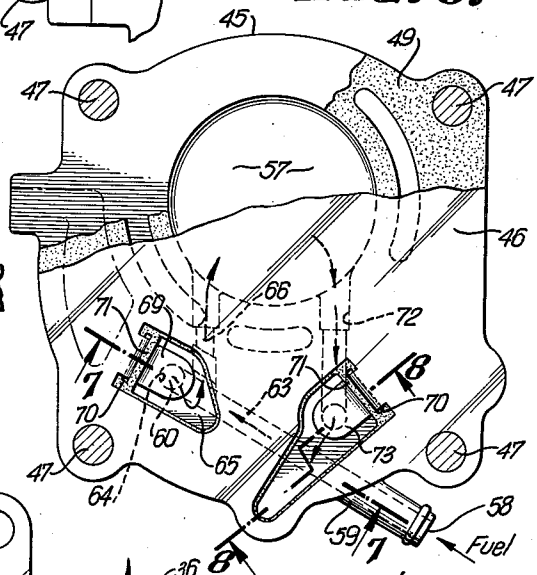

FIG. 7.

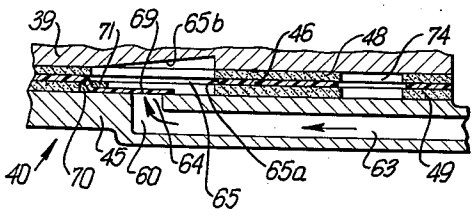

FIG. 9.

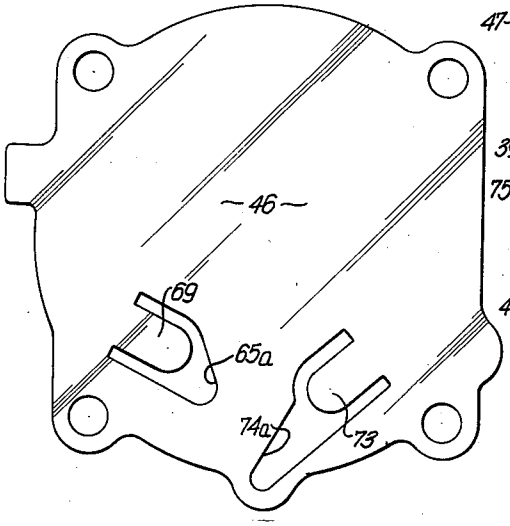

FIG. 8.

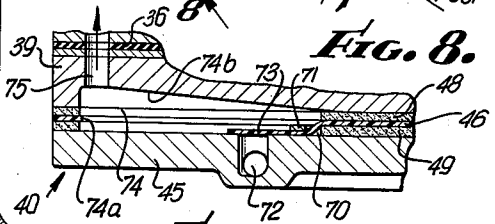

EDWARD J. BARR
INVENTOR.

WHANN & McMANIGAL
Attorneys for Applicant
By Robert M. McManigal

United States Patent Office 3,104,617 Patented Sept. 24, 1963

3,104,617

DIAPHRAGM PUMP

Edward J. Barr, Torrance, Calif., assignor to McCulloch Corporation, Los Angeles, Calif., a corporation of Wisconsin

Filed Aug. 8, 1960, Ser. No. 48,190
2 Claims. (Cl. 103—150)

This invention relates to a diaphragm pump, and more particularly to a pump for delivering fuel to a small carburetor in a small gas engine.

While the invention has particular utility as a fuel supply means for internal combustion engines of the two-cycle type which are used with chain saws, lawn mowers, and outboard types of marine engines, it is to be understood that its utility is not confined thereto.

The fuel pumps for supplying fuel to two-cycle internal combustion engines are for the most part operated by a diaphragm; that is, the diaphragm is pulsed at a high rate to charge and discharge the pump. The diaphragms are generally pulsed by the alternate gas pressure and partial vacuum developed in the crankcase of the engine, and the rate of pulsing is equivalent to and determined by the stroke speed of the pistons. Thus, in an engine operating at 10,000 r.p.m., there are an equal number of cyclic strokes of each piston per minute and there are the same number of cyclic pumping strokes of the diaphragm.

These diaphragms in the past have been made of a rubber-like material, such as Buna-rubber or neoprene reinforced by some woven material, such as cotton fabric. The pump valves, one being in the fuel inlet and the other being in the fuel discharge, are made of the same piece of material as the diaphragm. The valves are generally in the form of a pair of tongues fitted over passages in the fuel portion of the pump and are alternately opened and closed according to whether the pulse of the diaphragm charges or discharges the pump. In other words, each time the diaphragm is pulsed in one direction, one of the valves opens and the other valve is held closed.

Over a long period of years, there have been excessive valve and diaphragm failures for various reasons. During the normal operation of the valves, there is a tendency of the reinforcing fabric or of the rubber or plastic coatings to swell, and when this occurs in the valve stresses are created to cause the valves to curl, either toward or away from the ports they control. When a valve curls away from the port the pump fails because the valve no longer properly closes. Thus, during a long period there has been unsatisfactory fuel pump operation in the aforesaid type of engine with accompanying unsatisfactory operation of the engines. These expensive failures have resulted in considerable research on the part of the manufacturers concerned. One of the first things that was found was that the new synthetic materials which were recommended for use as a single sheet, that is, unreinforced, swelled during operation more than the reinforced materials and tended to ooze out of the pump and, consequently, cause leaks. Durable materials, such as nylon, were tested, but after a short time they fatigued and the diaphragms ruptured.

However, according to the invention, it was surprisingly found that a diaphragm with integral valves stamped from one sheet of polytetrafluoroethylene, sold commercially as Teflon, functioned successfully under operating test conditions for 800 hours. Diaphragms made of polytetrafluoroethylene were further tested successfully on engines which were operated at 11,000 to 15,000 r.p.m. These speeds are far in excess of previous maximum successful operating speeds.

It is an object of the present invention to provide an improved diaphragm pump for operation with two-cycle internal combustion engines.

It is another object of the invention to provide an improved diaphragm having integral check valves for use in the high pulse rate pump.

It is still another object of the invention to provide a new combination of a diaphragm pump having a diaphragm made of a single sheet of homogenous material, said diaphragm having check valves integral therewith.

It is a further object of the invention to provide an improved single sheet diaphragm for a fuel pump, said diaphragm being made from polytetrafluoroethylene.

It is still another object of the invention to provide an improved pump diaphragm having integral check valves and made from a single sheet of material which operates successfully for a longer period than was heretofore believed possible.

Further objects and advantages of the invention may be brought out in the following part of the specification wherein small details have been described for the competence of disclosure, without intending to limit the scope of the invention which is set forth in the appended claims.

Referring to the accompanying drawings which are for illustrative purposes only:

FIG. 1 is a plan view of a carburetor having a fuel pump according to present invention attached to its unshown underside;

FIG. 2 is a side view of the carburetor and the fuel pump;

FIG. 3 is a cross-sectional view of the carburetor and fuel pump taken as indicated along the line 3—3 of FIG. 1;

FIG. 4 is a cross-sectional view taken as indicated along the line 4—4 in FIG. 3;

FIG. 5 is a partially cutaway view illustrating the air or gas part of the pump, taken as indicated along the line 5—5 of FIG. 3;

FIG. 6 is a partially cutaway plan view illustrating the fuel part of the pump, taken as indicated along the line 6—6 of FIG. 3;

FIG. 7 is an enlarged fragmentary cross-sectional view illustrating the fuel inlet and inlet check valve, taken as indicated along the line 7—7 of FIG. 6;

FIG. 8 is an enlarged fragmentary view illustrating the fuel pump outlet and outlet valve, taken substantially along the line 8—8 of FIG. 6; and

FIG. 9 is a plan view of the Teflon diaphragm according to the present invention.

Referring now to the drawings, the fuel pump according to the present invention and the carburetor herein shown and described, is particularly adapted for use with an engine of the so-called two-cycle type wherein pulsing pressures are available, although it is to be understood that this apparatus may be used with other types of internal combustion engines or in connection with other devices where pulsating pressures are available.

In FIGS. 1–4, there is shown a carburetor 10 having an induction passage therethrough which includes an inlet portion 11 and a mixture outlet portion 12 with a venturi 13 interposed therebetween and connecting said passage portions. At the outlet end of the carburetor body is a flange 16 which is adapted to be secured to a boss 17 of the inlet of the mechanism to which a fuel mixture is supplied. As shown, the boss 17 is on the wall of crankcase 18 of an internal combustion engine of the two-cycle type, the engine inlet being in said boss 17.

Means for controlling the flow of fluid through the induction passage comprises a throttle valve 19, shown as being of the butterfly type, which is mounted on the usual throttle shaft 21, journaled in bearings 22. One end of the shaft 21 is provided with a throttle lever 23 which is in the shape of a bell crank. The lever 23 is secured to the shaft in the usual well known manner whereby it has a fixed predetermined position on the shaft relative to the position of the throttle valve 19.

There is an arm 24 on the body 10 which extends outwardly substantially parallel to the throttle shaft and which is provided with a tapped opening adjacent the end for the reception of a screw 27 having an idle screw spring 28 between the head of the screw and the arm 24. The screw 27 is adapted to be turned toward and away from the free end of the adjacent arm of the throttle lever 23 to serve as a stop, limiting closing movement of the throttle valve so that said valve may be adjusted in a cracked position for idling.

The lower or underside of the body 10, as shown in FIGS. 3 and 4, is recessed to provide a fuel chamber 29. The fuel chamber is typically connected to idling ports 30 and 31 by unshown passages and to an air inlet passage 33, also connected to the idling ports 30 and 31. The flow of fuel is regulated between chamber 29 and the idling ducts by means of a needle valve 32.

The main fuel discharge orifice 35 is similarly connected to the chamber 29 by unshown passage means and the flow of fuel thereto is regulated by a needle valve similar to valve 32 but not shown.

The chamber 29 is closed by a flexible diaphragm 36, having a stiffening disc 37 on its upper face, and which has its marginal edge portion clamped between the body 10 and a pump plate 39 which on its lower side forms the air or gas pulsing portion of the fuel pump, generally designated as 40. The side of plate 39 facing diaphragm 36 is provided with a recess 41 of substantially the same diameter as the recess 29, said recess 41 serving as an air pressure balancing chamber which is connected to the atmosphere by passage 42, shown in FIG. 3.

The fuel pump 40, according to the invention, is comprised of three principal parts, namely, the aforesaid plate 39 having the operating or driving portion of the pump formed in its underside; the fuel carrying portion of the pump formed in a lower plate 45 complementary to the plate 39; and a diaphragm 46 composed of a single sheet of thin polytetrafluoroethylene. As best seen in FIG. 2, the pump 40 is secured to the carburetor by means of cap screws 47. In the pump the diaphragm 46 is spaced between two sealing gaskets 48 and 49, the gaskets and the flexible polytetrafluoroethylene diaphragm being marginally clamped between the plate 39 and the fuel plate or body 45.

In the lower surface of plate 39 is a pressure pulsation chamber 51 formed by a dish-shaped recess covered by the polytetrafluoroethylene diaphragm 46. The pulsation chamber 51 is connected with the engine crankcase by means of a passageway 52 which is formed in part between a recess in the bottom of plate 39 and the gasket 48, as shown in FIG. 5, and then extends outwardly through the diaphragm 36 at a position outwardly of chamber 29 in the carburetor body 10. The passageway 52 terminates at a port 53, shown in FIG. 2, and communicates with the engine crankcase in the well known manner through a passage 54 in the boss 17.

The fuel plate 45 is provided in its upper side, as best seen in FIG. 6, with a fuel chamber 57 substantially complementary to the pulsation chamber 51, and covered by the diaphragm 46. As indicated in FIG. 2, the fuel from any suitable source is conducted to a fuel inlet 58 in a stem 59 of the body. The inlet 58 is connected with a fuel chamber 60 by a passage 63, best seen in FIGS. 6 and 7, in the stem and in the body 45. The chamber 60 has a connection with the main fuel chamber 57, said connection comprising a port 64 at the upper side of the body 45. Between the two plates 45 and 39, the gaskets and diaphragm are cut away to provide a chamber 65, along with recess 65*b* in plate 39, and which is connected to the chamber 57 by means of a passage 66 in the fuel plate 45 and open to recess 65.

As best seen in FIGS. 6 and 9, the marginal portion of diaphgram 46 has a cutout portion 65*a*, forming a portion of the cutaway part 65, in which is left a tongue 69. The tongue serves as a check valve member which is operable within the chamber 65 and is adapted to permit the flow of fuel from the chamber 60 to the chamber 57 but which prevents the counter flow of fuel. The gasket 49 has a slot 70 into which tongue 69 is inserted and the outer bar 71, forming one side portion of the slot, limits the opening pivoting movement of the tongue 69, said tongue being adapted to seat on the upper surface area of plate 45 about port 64, the bottom or open end of the chamber 65 being of sufficient size to permit such engagement of the tongue with the area about the port 64.

The fuel chamber 57 in the pump is connected with the fuel chamber 29 in the carburetor by means of a passage 72 in fuel plate 45, shown in FIGS. 6 and 8; a chamber 74, formed by cutting away the gaskets 48 and 49, a portion 74*a* of the diaphragm 46 and by forming a relieved portion 74*b* in the bottom surface of plate 39; and a passage 75 in body 10 extending through diaphragm 36, as shown in FIG. 4.

In the formation of the chamber 74 the marginal portion of the diaphragm 46 has a cutaway portion 74*a* in which is left a tongue 73. This tongue serves as a check valve operable within chamber 74 and is adapted to permit the flow of fuel from the fuel chamber 57 in the pump to the fuel chamber 29 in the carburetor but which prevents counter flow of fuel. In chamber 74, valve 73 is inserted through a slot 70 in the gasket 49 and the bar 71, forming part of the slot, limits the opening of the tongue 73, said tongue being adapted to seat on the upper surface area of the pump body 45 about the port 72, the bottom or open end of the chamber 74 being of sufficient size to permit such engagement of the tongue with the area about said last mentioned port.

Passage 75 includes an enlarged downwardly inclined portion in which is fitted securely a tubular member 76 which serves as a valve seat and cooperating with the seat is a valve 77. An inlet control lever 80 is disposed in the chamber 29 and is pivoted at 81. The lever 80 is biased by a spring 82 so that one end 83 is forced against stiffening plate 37 of diaphragm 36 and the other end 86 is forced against the end of valve 77 to hold it in a closed position.

In operation, the carburetor 10 operates in a well known manner and as butterfly valve 19 is opened, the amount of air going through the venturi 13 increases so as to increase the suction on the main fuel port 35 to draw fuel out of the chamber 29. This tends to cause diaphragm 36 to raise and in turn raise end 83 of lever 80 against the force of spring 82 and simultaneously, causes the other end 86 of the lever to permit valve 77 to open to allow more fuel into the carburetor. If the air pulse line 54 is attached to the charge and discharge by the action of one piston, for example, then each time the piston moves away from the crankcase in the compressive part of the stroke air is drawn from pulsation chamber 51 and this causes the polytetrafluoroethylene diaphragm 46 to increase the size of the fuel chamber 57 so as to charge the pump through the fuel inlet 58. Thus, the suction created in fuel chamber 57 is effective in chamber 65 to open check valve 69 if it does not open by the force of the fuel in the inlet 58. Simultaneously, the suction which causes the chamber 57 to fill also exerts a suction on valve 73 through passage 72 to cause it to be held closed in a sealed position. When the piston is then fired, it increases the pressure in the crankcase, in line 54 and in the pulsation chamber 51, and the diaphragm 46 is caused to be pulsed downwardly to increase the pressure in fuel chamber 57. As this occurs, the pressure causes the fuel in passage 66 to be forced against the top of valve 69 so as to hold it in a closed position. At the same time the pressure is increased in passage 72 so as to cause valve 73 to open and to deliver fuel through chamber 74, passage 75 into the carburetor fuel chamber 29 through the open valve 77.

The remarkable, unexpected effect of the use of a

polytetrafluoroethylene diaphragm with its integral valves has changed the pump operation and that of the engine to which it supplies fuel from one of embarrassing failure and unreliability to one of complete operational reliability. Such pumps, according to the present invention, have been completely successful in ambient temperatures of minus 30° F. and in engine operating temperatures of more than 200° F. regardless of the type of fuel used. Moreover, the capabilities of the pump as to operating speeds and total hours of operation have far exceeded pumps in the prior art and have far exceeded what was expected for a successful pump.

The length-to-thickness ratio of the diaphragm and valves is predicated on the cyclic response per minute necessary and the pumping volume required in each particular application. Practical thicknesses of the polytetrafluoroethylene sheets used have been found to be from approximately 0.0025 inch to 0.060 inch. The desirable crystallinity range of the polytetrafluoroethylene used has been found to be from approximately 45 percent to 70 percent.

I claim:

1. In a gas operated diaphragm fuel pump, a flexible diaphragm dividing the pump into a gas part and a fuel part, a gas inlet and outlet operably connected to one side of the diaphragm and to a gas chamber on said one side in said gas part, a fuel inlet and a fuel discharge operably connected to the other side of the diaphragm and to a fuel chamber on said other side in said fuel part, a check valve in said fuel inlet for closing said fuel chamber to said fuel inlet when the pump discharges through said fuel discharge, a second check valve in said fuel outlet for closing said fuel chamber to said fuel outlet when said pump is taking a suction, said pump discharging when gas pressure is increased to flex said diaphragm on said one side and toward said fuel chamber and said pump taking a suction when said gas pressure is reduced to flex said diaphragm on said one side away from said fuel chamber, said check valves being in the form of tongues integrally connected with and of the same piece of material as said diaphragm, the improvement comprising: said diaphragm and valves being of a single sheet of polytetrafluoroethylene having a thickness range of from approximately 0.0025 inch to 0.060 inch.

2. A gas operated fuel pump comprising: a pump casing; a flexible diaphragm in said casing dividing the pump into two parts, one of said parts to carry an operating gas and the other of said parts to carry the fuel being pumped; a gas inlet and outlet operably connected to one side of said diaphragm and to a gas chamber on said one side in said gas part; a fuel inlet and a fuel discharge operably connected to the other side of the diaphragm and to a fuel chamber on said other side in said fuel part; a check valve in said fuel inlet for closing said fuel chamber to said fuel inlet when the pump discharges through said fuel discharge; and a second check valve in said fuel outlet for closing said fuel chamber to said fuel outlet when said pump is being charged, said pump discharging when gas pressure is increased to flex said diaphragm on said one side toward said fuel chamber and said pump being charged when said gas pressure is reduced to flex said diaphragm on said one side away from said fuel chamber, said check valves being in the form of tongues integrally connected with and of the same piece of material as said diaphragm, said diaphragm and said valves being of a single sheet of polytetrafluoroethylene, and said sheet having a thickness of from approximately 0.0025 inch to 0.060 inch, and a crystallinity range of approximately 45 percent to 70 percent.

References Cited in the file of this patent

UNITED STATES PATENTS

2,662,065	Berry	Dec. 8, 1953
2,796,838	Phillips	June 25, 1957

OTHER REFERENCES

"Fluorocarbons" (Rudner), published by Reinhold Publishing Corp. (New York), 1958.

High Heat and Corrosion Resistant Plastic (Yelton). Product Engineering, Nov. 1947.