Nov. 13, 1956 K. F. TRIGGS 2,770,318

ODOR AND SMOKE CONSUMER

Filed May 2, 1955 2 Sheets-Sheet 1

FIG. 1

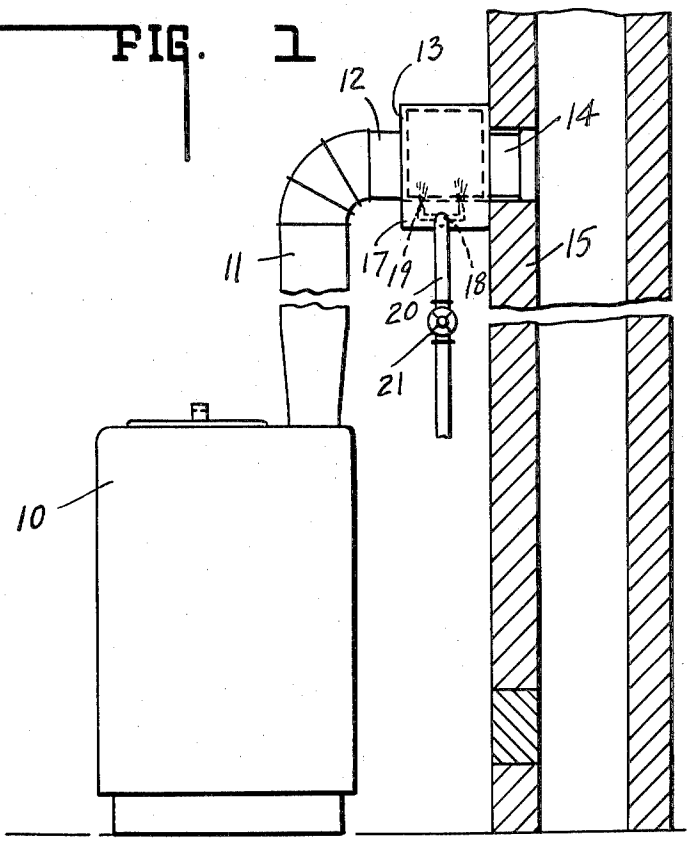

FIG. 2

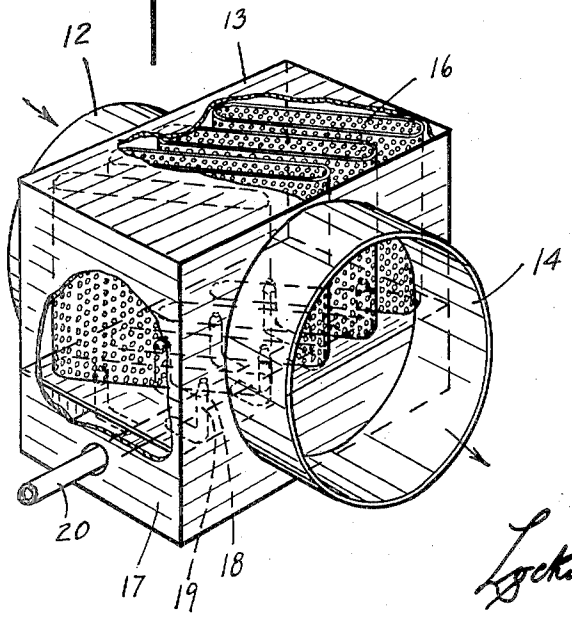

INVENTOR.
KENNETH F. TRIGGS.

BY
Lockwood, Galt, Woodard & Smith.
ATTORNEYS.

Nov. 13, 1956 K. F. TRIGGS 2,770,318

ODOR AND SMOKE CONSUMER

Filed May 2, 1955 2 Sheets-Sheet 2

FIG. 3

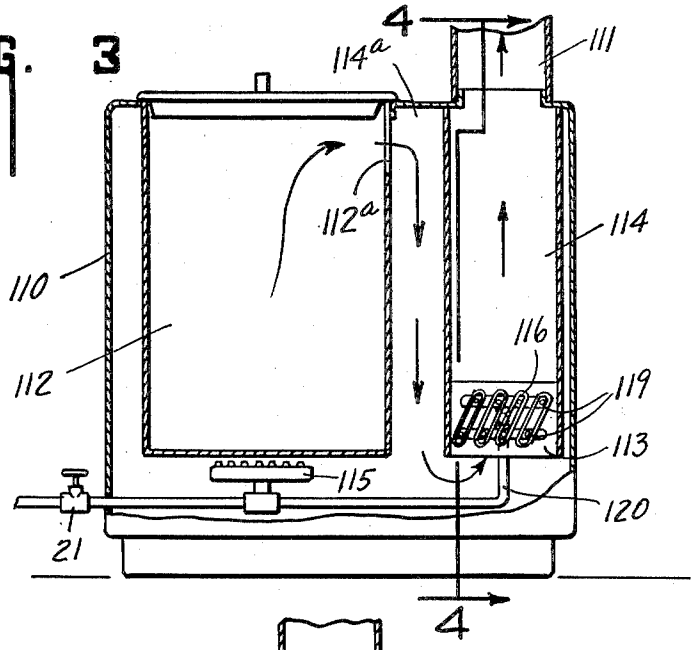

FIG. 4

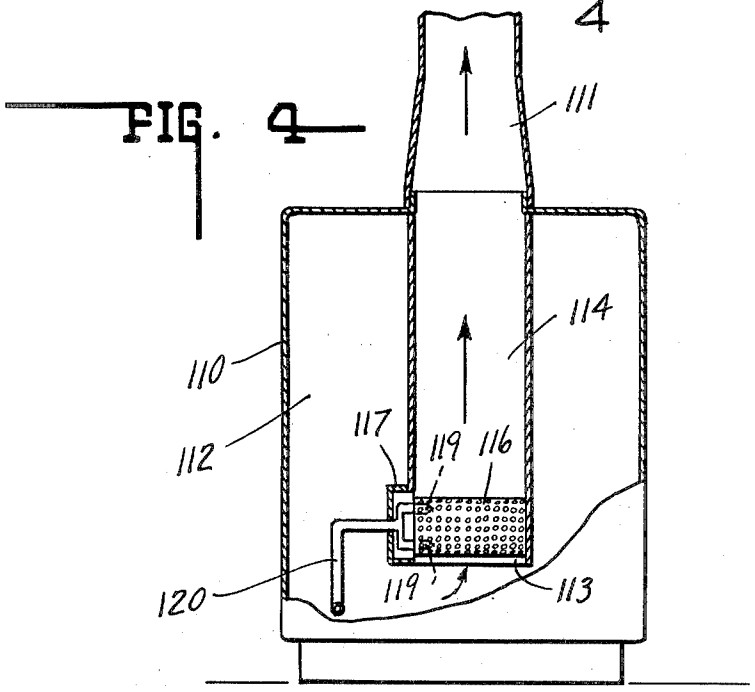

INVENTOR.
KENNETH F. TRIGGS.
BY
Lockwood, Galt, Woodard & Smith
ATTORNEYS.

United States Patent Office 2,770,318 Patented Nov. 13, 1956

2,770,318

ODOR AND SMOKE CONSUMER

Kenneth F. Triggs, Huntington, Ind.

Application May 2, 1955, Serial No. 505,460

1 Claim. (Cl. 183—6)

This invention relates to an odor and smoke consumer, particularly adaptable for installation in indoor incinerator flues to eliminate emission of smoke and obnoxious odors in the burning of garbage and trash.

One of the problems of indoor incinerators resides in the emission of odor carrying particles and smoke which in some cases makes the installation and use of such incinerators undesirable.

It is, therefore, the purpose of this invention to provide and insert in the flue an odor and smoke consumer of a character which will meet and overcome this problem. Whereas the invention particularly involves such a flue attachment for incinerators, it is to be understood that it is applicable to other installations such as may emit smoke and odors.

For the above purposes there is provided an incandescent baffle structure through which the smoke and odors are directed from the source to the flue. Such baffles are arranged to intercept the passage of odor carrying particles and smoke through impingement thereof on their surfaces while permitting otherwise unrestricted flow to the flue, as by a circuitous route. The baffles are preferably in the form of stainless steel screens which may be heated to incandescence by oil or gas flames directed thereon from a combustion chamber below, or in case the baffles are positioned horizontally, at the side of said baffles.

The screen baffles are preferably tubular, either arranged in overlapping staggered relation or in elongated form arranged in parallel overlapping relation disposed at an angle to the passage of the flue gases therethrough. By reason of the incandescence of the baffles, odor carrying particles or smoke impinging thereon will be completely consumed and thereby eliminated.

The full nature of the invention will be understood from the accompanying drawings and the following description and claim:

Fig. 1 is a side elevation showing an installation of the odor and smoke consumer in connection with a source of combustion.

Fig. 2 is a perspective view of the consumer with portions thereof broken away.

Fig. 3 is a section through an incinerator and flue with the consumer built therein, showing a modified form of the invention.

Fig. 4 is a section taken on the line 4—4 of Fig. 3.

In the drawings as illustrating one type of installation there is shown an incinerator **10** or other source of combustion, in which garbage or trash may be disposed for burning. A smoke pipe **11** leads from the incinerator into a smoke collar inlet **12**. Said smoke collar **12** comprises an integral part of the housing **13** of the consumer. On the outlet side of the consumer there is an outlet collar **14** leading into a flue or chimney **15**.

As shown in Fig. 2, the housing **13** comprises a sheet metal box completely enclosed on all sides other than for the opening into the collars **12** and **14**. Thus, gases passing through the smoke pipe **11** are directed through

the enclosed housing for discharge into the flue. For intercepting and consuming the odor carrying particles and smoke emitted with the gas, there is a series of tubular baffles **16**. Said baffles are arranged to completely intercept the passage of the gas through the consumer housing while permitting free flow therebetween so as to intercept the particles and the like which are caused to impinge upon the surface thereof.

As shown herein, said tubular baffles are elongated and arranged in spaced parallel relation to each other, and angularly disposed to the direction of flow of the gases passing through the housing. They may be formed of perforated stainless steel sheet metal, each being open at at least one end. Immediately adjacent the consumer housing **13**, there is provided a combustion chamber **17** housing a burner manifold **18** carrying a series of staggered burner nozzles **19** arranged to project a pair of flames into the open end of each tube. The manifold **18** may be connected with the gas pipe **20** or with a suitable oil line and air mixing valve of the usual character, not shown herein. Depending upon the fuel employed, a suitable pilot burner may be installed in the chamber **17** for igniting the nozzles **19** upon opening the valve **21**.

When odors or smoke emitting products are to be consumed in the incinerator **10**, the valve **21** is opened to permit fuel, gas or oil, to enter the manifold **18** and be ignited by the pilot. In a very short time the perforated or screen-like tubes **16** will become heated to incandescence. Thereupon any odor carrying particles, smoke or the like carried through the consumer chamber housing **13** will impinge on the incandescent surface of one of the tubes and be completely consumed thereby, the free gases passing between the tubes to the flue **15**.

In the modified form of the invention shown in Figs. 3 and 4, the consumer is illustrated as being built into an incinerator or other source of odor or smoke. The incinerator **110** houses a combustion chamber **112** for burning of trash, garbage or the like, having a fuel fired burner **115** positioned below the grates connected with the fuel line **120** controlled by the valve **21**. Spaced to one side of the combustion chamber **112** there is provided a built-in flue **114** having its intake opening adjacent the bottom of the incinerator and communicating at its top with the smoke pipe **111**. The combustion chamber has an opening **112***a* adjacent its top opening into a downdraft passage **114***a*, through which smoke and odors will be drawn into the bottom of the flue **114**.

Built into the flue **114** there is a consumer housing **113** mounting a series of perforated tubular stainless steel baffles **116**. A series of flames are discharged from a series of jets **119** within the combustion chamber **117**. The jets are carried by a manifold connected with the fuel line **120**.

From the foregoing structure it will be observed that the consumer is a unitary part of the incinerator, and the flames for rendering the tubes incandescent may be ignited by a suitable pilot simultaneously with igniting the trash burner **115**.

Whereas the above smoke consumer has been shown and described as being particularly adaptable for use in connection with trash and garbage indoor incinerators, it will be appreciated that it is applicable to any type of burner including industrial and power plant furnaces and other furnaces having smoke or odor emitting flues.

The invention claimed is:

An odor and smoke consumer adapted to be mounted in the smoke emitting flue of a burner, comprising a series of perforated elongated sheet metal tubes extending transversely of the flow of gas through said flue, said tubes being positioned in parallel spaced relation to each other with portions of one tube overlapping portions of the adjacent tubes to present a continuous intercepting

surface to odor and smoke producing particles carried by said gas while permitting the flow of gas therebetween, and a fuel conducting manifold having a plurality of burner nozzles extending in alignment with each said tube for directing a flame interiorly thereon to render it individually incandescent from within, whereby said particles will be consumed upon striking the exterior of said incandescent tubes and prevented from passing out of the flue.

References Cited in the file of this patent

UNITED STATES PATENTS

839,797	Wood	Dec. 25, 1906
1,528,816	Cummings	Mar. 10, 1925
2,211,812	Colbert	Aug. 20, 1950
2,658,742	Suter et al.	Nov. 10, 1953
2,666,494	Engel	Jan. 19, 1954

FOREIGN PATENTS

206,118	Great Britain	July 17, 1924