Sept. 6, 1949. H. N. JUEL ET AL 2,481,120

RAILWAY JOURNAL BOX

Filed Dec. 10, 1946

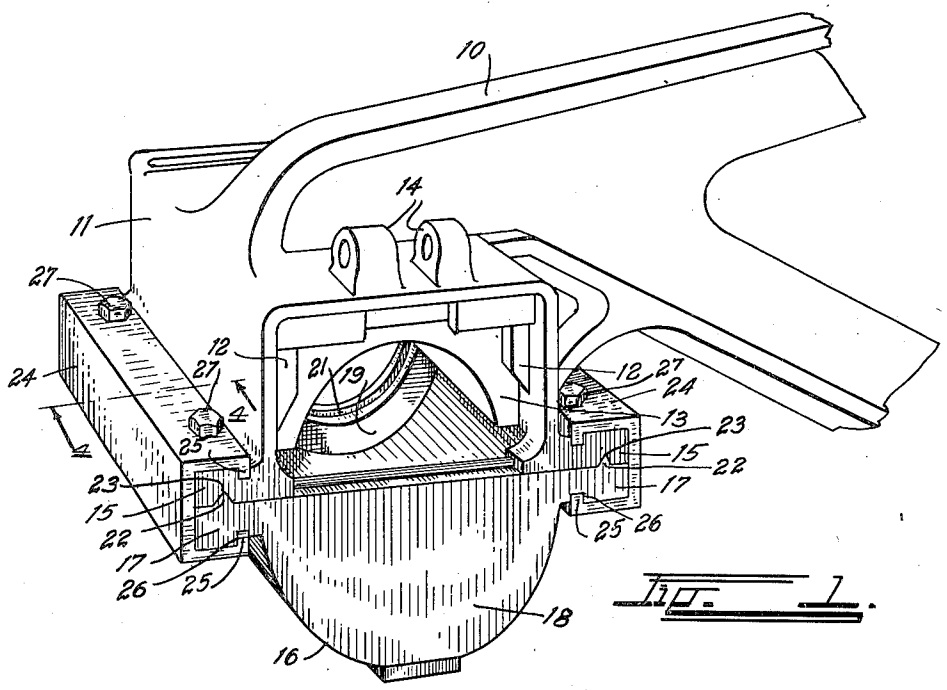

Fig. 1.

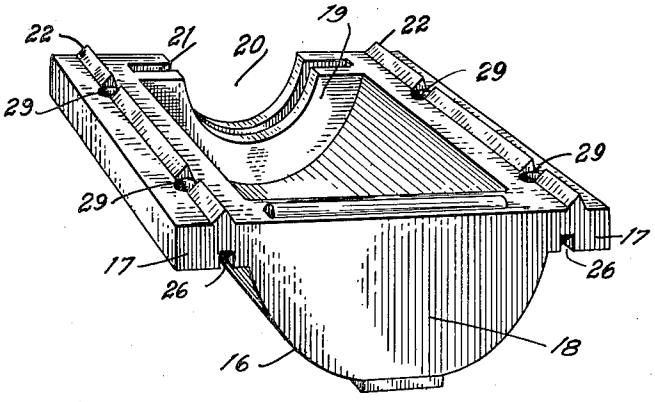

Fig. 2.

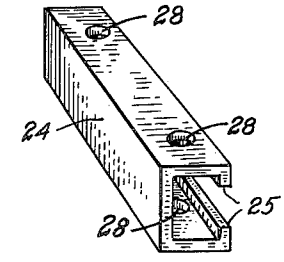

Fig. 3.

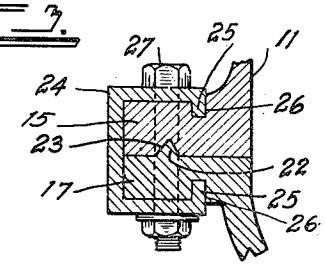

Fig. 4.

INVENTORS.
F. B. LEWIS, J. A. SCHROEDER.
BY & H. N. JUEL.

ATTORNEY.

Patented Sept. 6, 1949

2,481,120

UNITED STATES PATENT OFFICE

2,481,120

RAILWAY JOURNAL BOX

Harry N. Juel, John A. Schroeder, and
Francis B. Lewis, Denver, Colo.

Application December 10, 1946, Serial No. 715,320

3 Claims. (Cl. 308—38)

1

This invention relates to a railway journal box and has for its principal object the provision of a journal box which can be lifted vertically from the wheel axle or from which the axle may be vertically lowered so that it will be unnecessary to disassemble the truck when it is desired to replace the wheels and axles.

Other objects and advantages reside in the detail construction of the invention, which is designed for simplicity, economy, and efficiency. These will become more apparent from the following description.

In the following detailed description of the invention, reference is had to the accompanying drawing which forms a part hereof. Like numerals refer to like parts in all views of the drawing and throughout the description.

In the drawing:

Fig. 1 is a fragmentary perspective view of a portion of a conventional railway truck frame with one of the improved journal boxes in place thereon;

Fig. 2 is a perspective view of a journal pan employed in the invention;

Fig. 3 is a perspective view of a channel member used in assembling the journal box; and

Fig. 4 is a detail cross sectional view taken on the line 4—4, Fig. 1.

A conventional railway truck side frame is indicated at 10. In the usual construction the side frames carry journal boxes which completely surround the axle journals. Therefore, when it is desired to remove or install an axle, it is necessary to remove the side frame from the truck. This improved journal box construction, however, allows the axles to be dropped from the side frames without disturbing the latter in any way.

The improved journal box consists of an upper half 11 which may be similar in every way to the upper half of a typical journal box. The upper half 11 is provided with the usual means 12 for holding a conventional bronze bearing 13 in place therein and with hinge lugs 14 to which the usual door is attached.

For the uses of the present invention, however, the upper half 11 is formed with relatively heavy, forwardly and rearwardly extending, horizontal flanges 15 along the bottom edges of its front and rear faces.

The upper half 11 is closed at its bottom by means of a semi-cylindrical pan 16 provided with relatively heavy front and rear flanges 17 fitting to and beneath the flanges 15. The pan 16 is closed at its outer end by means of an end wall

2

18 which retains the oil and waste about the journal as in the usual box. The inner end of the pan 16 contains an inner end wall 19 having a semi-circular axle notch 20 of a size to fit to and around the bottom of the usual axle journal.

The usual railway journal box has a circular hole in its inner wall through which the axle journal extends. It is for this reason that it is necessary to remove the truck side frames in order to pull the boxes from the journals. In this improved journal box, the upper half of the usual journal hole is retained in the upper half 11 and the notch 20 forms the lower half thereof.

The usual journal box employs an oil retaining ring of felt in similar material imbedded in a retaining groove about the journal hole. This improved box retains the conventional oil retaining ring in the usual groove in the upper half 11 and in a complementary groove 21 about the notch 20.

The flanges 17 carry oil retaining and aligning tongues 22 which fit snugly into receiving grooves 23 in the bottom of the flanges 15. These tongues and grooves serve to accurately position and align the pan 16 with the upper half 11.

The two pairs of flanges 15 and 17 are held together by means of rectangular channel slides 24 having upwardly and downwardly turned flanged edges 25. The edges 25 slidably and tightly engage in longitudinally extending receiving channels 26 formed in the tops of the flanges 15 and in the bottoms of the flanges 17.

The slides 24 are locked in place and flanges are still more securely clamped together by means of clamp bolts 27 which extend through the tops and bottoms of the slides through suitable bolt holes 28 and through the flanges 15 and 17 through registering bolt holes 29.

When assembled, the improved box functions exactly similar to the conventional journal box. To remove a set of wheels and axle, however, it is only necessary to remove the bolts 27 and drive the slides 24 from place. This allows the pan 16 to drop from the axle journal, the conventional oil retaining felt ring pulling from the groove 21 and remaining in place about the journal. The truck is now jacked up to lift the upper half 11 and its bearing 13 from the axle journal. To replace an axle the reverse of the above is carried out.

While a specific form of the improvement has been described and illustrated herein, it is desired to be understood that the same may be varied, within the scope of the appended claims,

without departing from the spirit of the invention.

Having thus described the invention, what is claimed and desired secured by Letters Patent is:

1. A railway journal box comprising: an inverted U-shaped upper half box having an open bottom and enclosing the upper half of a journal; a bearing member supporting said half box from said journal; means for securing the upper half box to a railway truck; upper flanges extending horizontally along the lower edges of the front and rear faces of said upper half box; a semi-cylindrical pan closing the open bottom of said half box; lower flanges extending along the upper edges of the front and rear faces of said pan; a U-shaped end closing the inner extremity of said pan to the journal; longitudinally extending tongues projecting upward from said lower flanges into longitudinally extending grooves in said upper flanges; longitudinally extending channel members slidably engaging the adjacent upper and lower flanges to maintain them together; and means for locking said channel members in place.

2. A railway journal box comprising: an inverted U-shaped upper half box having an open bottom and enclosing the upper half of a journal; a bearing member supporting said half box from said journal; means for securing the upper half box to a railway truck; upper flanges extending horizontally along the lower edges of the front and rear faces of said upper half box; a semi-cylindrical pan closing the open bottom of said half box; lower flanges extending along the upper edges of the front and rear faces of said pan; a U-shaped end closing the inner extremity of said pan to the journal; longitudinally extending tongues projecting upward from said lower flanges into longitudinally extending grooves in said upper flanges; longitudinally extending channel members; and flanged edges on said channel members engaging longitudinally extending grooves in said flanges for locking the upper flanges to the lower flanges.

3. A railway journal box comprising: an inverted U-shaped upper half box having an open bottom and enclosing the upper half of a journal; a bearing member supporting said half box from said journal; means for securing the upper half box to a railway truck; upper flanges extending horizontally along the lower edges of the front and rear faces of said upper half box; a semi-cylindrical pan closing the open bottom of said half box; lower flanges extending along the upper edges of the front and rear faces of said pan; a U-shaped end closing the inner extremity of said pan to the journal; longitudinally extending tongues projecting upward from said lower flanges into longitudinally extending grooves in said upper flanges; longitudinally extending channel members; flanged edges on said channel members engaging longitudinally extending grooves in said flanges for locking the upper flanges to the lower flanges; and clamping bolts extending through the upper and lower sides of said channel members and through the interposed flanges to clamp the entire assembly together.

HARRY N. JUEL.
JOHN A. SCHROEDER.
FRANCIS B. LEWIS.

REFERENCES CITED

The following references are of record in the file of this patent:

UNITED STATES PATENTS

Number	Name	Date
7,800	Tomlinson	July 17, 1877

FOREIGN PATENTS

Number	Country	Date
349,601	Germany	Nov. 22, 1918