Aug. 2, 1949. S. S. GENTILE 2,477,735

BRACKET AND SUPPORT THEREFOR

Filed May 22, 1948

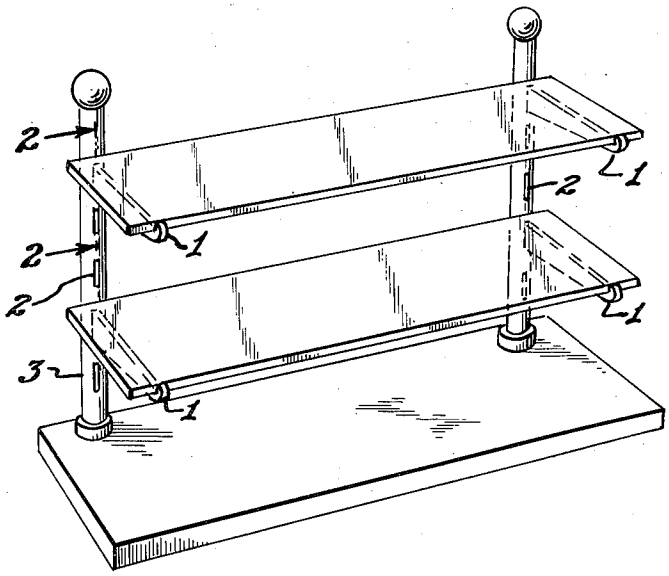

FIG. 1.

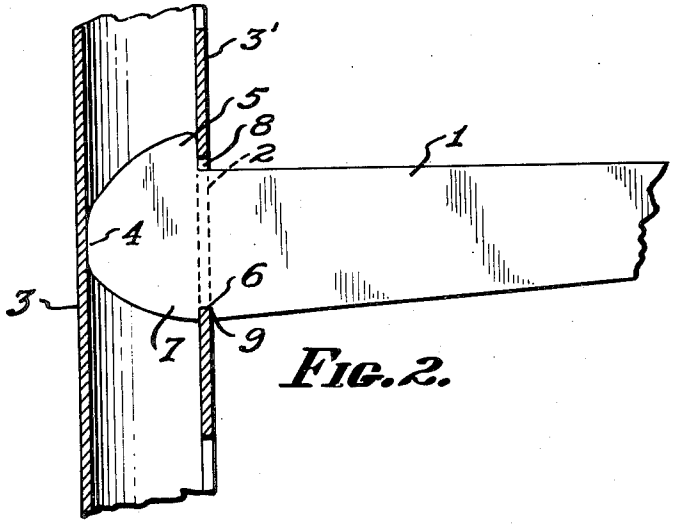

FIG. 2.

INVENTOR.
SCIPIO S. GENTILE.
BY Allen & Allen
ATTORNEYS.

Patented Aug. 2, 1949 2,477,735

UNITED STATES PATENT OFFICE

2,477,735

BRACKET AND SUPPORT THEREFOR

Scipio S. Gentile, Cincinnati, Ohio

Application May 22, 1948, Serial No. 28,702

3 Claims. (Cl. 248—243)

1

My invention relates to a bracket for supporting shelving and the like which may be adjustably positioned on a vertical support. A bracket and support of this type may be used for window display or other types of display. The support may be incorporated into the molding of a showcase and the bracket used to support shelving therein, and in some instances a single support may be used with one or more brackets for hanging or supporting articles of merchandise for display.

It is the object of my invention to provide a bracket and a cooperating support therefor which may be simply and inexpensively manufactured and sold, and wherein the bracket may be easily removed from the support and placed in the support at different positions with a minimum of effort.

It is a further object of my invention to provide a bracket and support which has all of the above advantages but which will be very rigid and firm when in position and will not be able to rattle or rock in any direction.

While in the following specification I will primarily refer to a bracket for supporting shelving and a support consisting of a vertical cylinder or pipe, it is to be understood that the configuration of the supporting portion of the bracket may be changed to accommodate different shelves or articles and the supporting column may be of other configurations than tubular.

These and other objects of my invention which will be set forth hereinafter or will be apparent to one skilled in the art upon reading these specifications, I accomplish by that certain construction and arrangement of parts of which I shall now describe an exemplary embodiment. Reference is now made to the drawings, which form a part thereof and in which:

Figure 1 is a perspective view of my bracket and support therefore mounted on a base and carrying shelving.

Figure 2 is a cross section of the support taken on the section line 2—2 of Figure 1.

Briefly, in the practice of my invention, I provide a hollow support which is shown as a tube in the exemplary embodiment. The tube has a plurality of vertical slots within which is positioned a flat bracket having a head which projects into the interior of the support. The head is so configured that a portion of it abuts the interior of the support beyond one end of the slot, with a notch in the one side of the support straddling a terminal of the slot, and a portion of the head abutting against the wall

2

of the support opposite the slot. The parts are so configured that the support may be readily removed and replaced by moving it upwardly or downwardly and rocking it.

Referring to the drawings, I provide a hollow support 3 having a plurality of vertical slots 2 in the wall 3 thereof.

The bracket is preferably formed of a flat piece of sheet metal and has a projection or supporting portion 1 which terminates in the head portion 7, which when the bracket is in position is within the interior or hollow of the support 3.

The head portion 7 of the bracket has an ear 5 which abuts the interior of the wall 3' of the support and a notch 6 which straddles the opposite terminal of the slot 2 as shown in Figure 2. The rear portion 4 of the head 7 abuts against the interior of the wall 3 at a position diametrically opposite the slot 2.

The depth of the notch 6 and the length of the ear portion 5 is such that the distance between the shoulder 8 and the lip 9 of the notch 6 is less than the length of the notch 2, so that the bracket as a whole may be forced upwardly until the notch 6 clears the end of the slot. In this position, the bracket may be rocked upwardly and the head 7, together with the ear 5 removed from the slot 2.

In order to replace the bracket in position on the supports, it is merely necessary to insert it so that the ear 5 together with the head 7 may be tilted into the support 3 through the notch 2 with the shoulder point 8 as a center. Then when the portion 4 of the head 7 abuts the opposite interior of the wall 3', the bracket as a whole is moved downwardly so that the notch 6 engages as shown in the Figure 2.

From the above, it is apparent that the bracket may be easily and quickly removed and replaced in any slot in any support. It is also apparent that when the bracket is in final position as shown in Figure 2, the notch 6, together with the ear 5 prevents the bracket from being rocked downwardly. While the portion 4 of the head 7 abutting and jamming the diametrically opposed wall interior 3' prevents the bracket 1 from being swung upwardly, it may be desirable to form the head 7 slightly wider than the diameter of the interior of the support so that the head 7 of the bracket slightly springs the material of the support 3 when in the position shown in Figure 2.

It is apparent that the bracket and support therefor, may be inexpensively manufactured out of ordinary tubing and completely flat material. It may be taken down and conveniently shipped

and quickly and easily assembled in any desirable position.

It is to be understood that modifications may be made in my invention without departing from the spirit thereof, and I do not intend to limit myself otherwise than as pointed out in the claims which follow. Having thus described my invention, what I claim as new and desire to secure by Letters Patent is:

1. A bracket and support therefor comprising an upstanding tubular member having vertical slots therein, a bracket positioned in and projecting from at least one of said slots and having a head portion within said tubular member, said head portion abutting said tubular member beyond each end of said slot and abutting said tubular member at a point diametrically opposite said slot.

2. A bracket and support therefor comprising a substantially hollow walled upstanding member having a vertical slot therein; a bracket having one end positioned within said hollow walled member and the remaining portion projecting outwardly through said slot to form a shelf support, the bracket end within said walled member having portions projecting beyond said slot ends and a portion abutting the interior of the wall diametrically opposite said slot, the distance between the abutting portion and said projecting portions being at least as great as the internal diameter of the support.

3. A bracket and support therefor comprising a substantially hollow walled upstanding member having a vertical slot therein, a bracket having one end positioned within said hollow walled member and the remaining portion projecting outwardly through said slot to form a shelf support, a notch in the bracket embracing the wall beyond one end of the slot and an ear projecting from the portion of the bracket within the walled member on the opposite side from the notch and a cam portion on the end abutting the interior wall of the support diametrically opposite the slot.

SCIPIO S. GENTILE.

REFERENCES CITED

The following references are of record in the file of this patent:

UNITED STATES PATENTS

Number	Name	Date
836,045	Melchior	Nov. 13, 1906
857,543	Thomas	June 18, 1907
1,978,636	Kiel	Oct. 30, 1934