(12) INTERNATIONAL APPLICATION PUBLISHED UNDER THE PATENT COOPERATION TREATY (PCT)

(19) World Intellectual Property Organization
International Bureau

(43) International Publication Date
11 November 2010 (11.11.2010)

PCT

(10) International Publication Number
WO 2010/127986 A2

(51) International Patent Classification:
F01D 9/00 (2006.01)

(21) International Application Number:
PCT/EP2010/055784

(22) International Filing Date:
29 April 2010 (29.04.2010)

(25) Filing Language: English

(26) Publication Language: English

(30) Priority Data:
0907814.8 8 May 2009 (08.05.2009) GB
0907817.1 8 May 2009 (08.05.2009) GB

(71) Applicant *(for all designated States except US)*: **ROLLS-ROYCE PLC** [GB/GB]; 65 Buckingham Gate, London SW1E 6AT (GB).

(72) Inventors; and

(75) Inventors/Applicants *(for US only)*: **MOORE, Alastair** [GB/GB]; c/o Rolls-royce PLC, P.O. Box 31, Derby DE24 8BJ (GB). **SCHWALLER, Peter** [GB/GB]; c/o Rolls-Royce PLC, P.O. Box 31, Derby DE24 8BJ (GB). **FRANQUEIRA-VALO, Francisco** [ES/GB]; c/o Rolls-Royce PLC, P.O. Box 31, Derby DE24 8BJ (GB). **BRIGHT, Christopher** [GB/GB]; C/o Rolls-Royce PLC, P.O. Box 31, Derby DE24 8BJ (GB).

(74) Agents: **ROBERTS, Nicholas** et al.; Rolls-Royce PLC, P.O. Box 31, Derby DE24 8BJ (GB).

(81) Designated States *(unless otherwise indicated, for every kind of national protection available)*: AE, AG, AL, AM, AO, AT, AU, AZ, BA, BB, BG, BH, BR, BW, BY, BZ, CA, CH, CL, CN, CO, CR, CU, CZ, DE, DK, DM, DO, DZ, EC, EE, EG, ES, FI, GB, GD, GE, GH, GM, GT, HN, HR, HU, ID, IL, IN, IS, JP, KE, KG, KM, KN, KP, KR, KZ, LA, LC, LK, LR, LS, LT, LU, LY, MA, MD, ME, MG, MK, MN, MW, MX, MY, MZ, NA, NG, NI, NO, NZ, OM, PE, PG, PH, PL, PT, RO, RS, RU, SC, SD, SE, SG, SK, SL, SM, ST, SV, SY, TH, TJ, TM, TN, TR, TT, TZ, UA, UG, US, UZ, VC, VN, ZA, ZM, ZW.

(84) Designated States *(unless otherwise indicated, for every kind of regional protection available)*: ARIPO (BW, GH, GM, KE, LR, LS, MW, MZ, NA, SD, SL, SZ, TZ, UG, ZM, ZW), Eurasian (AM, AZ, BY, KG, KZ, MD, RU, TJ,

[Continued on next page]

(54) Title: A FLOW CONTROL ARRANGEMENT

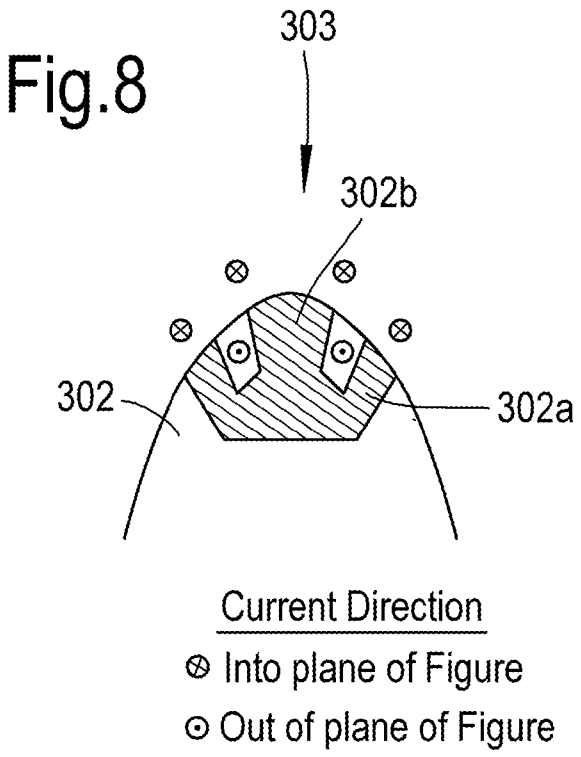

(57) Abstract: Significant noise is generated when turbulence in a free stream encounters an edge such as a leading edge or trailing edge of an aerofoil. The turbulence in contact with the edge causes static pressure fluctuations which radiate the acoustic noise. By providing magnetic or electric field actuators about the edge a impeding force is generated to create a transition zone for the fluid flow reducing static pressure fluctuations and therefore noise radiation. The actuator may comprise permanent magnets or electromagnets whilst the flow is ionised by appropriate ioniser mechanisms in order to facilitate creation of a impeding force through a Lorentz effect.

WO 2010/127986 A2

TM), European (AT, BE, BG, CH, CY, CZ, DE, DK, EE, ES, FI, FR, GB, GR, HR, HU, IE, IS, IT, LT, LU, LV, MC, MK, MT, NL, NO, PL, PT, RO, SE, SI, SK, SM, TR), OAPI (BF, BJ, CF, CG, CI, CM, GA, GN, GQ, GW, ML, MR, NE, SN, TD, TG).

Declarations under Rule 4.17:

— *as to the identity of the inventor (Rule 4.17(i))*

— *as to applicant's entitlement to apply for and be granted a patent (Rule 4.17(ii))*

Published:

— *without international search report and to be republished upon receipt of that report (Rule 48.2(g))*

A FLOW CONTROL ARRANGEMENT

The present invention relates to a flow control arrangement and more particularly to flow control arrangements utilised in gas turbine engines in order to control noise due to incoming flow non-uniformities interacting with surfaces.

Referring to Fig. 1, a gas turbine engine is generally indicated at 10 and comprises, in axial flow series, an air intake 11, a propulsive fan 12, an intermediate pressure compressor 13, a high pressure compressor 14, a combustor 15, a turbine arrangement comprising a high pressure turbine 16, an intermediate pressure turbine 17 and a low pressure turbine 18, and an exhaust nozzle 19.

The gas turbine engine 10 operates in a conventional manner so that air entering the intake 11 is accelerated by the fan 12 which produce two air flows: a first air flow into the intermediate pressure compressor 13 and a second air flow which provides propulsive thrust. The intermediate pressure compressor compresses the air flow directed into it before delivering that air to the high pressure compressor 14 where further compression takes place.

The compressed air exhausted from the high pressure compressor 14 is directed into the combustor 15 where it is mixed with fuel and the mixture combusted. The resultant hot combustion products then expand through, and thereby drive, the high, intermediate and low pressure turbines 16, 17 and 18 before being exhausted through the nozzle 19 to provide additional propulsive thrust. The high, intermediate and low pressure turbines 16, 17 and 18 respectively drive the high and intermediate pressure compressors 14 and 13 and the fan 12 by suitable interconnecting shafts 26, 28, 30.

It will be understood that gas turbine engines create a significant level of noise. Such noise may not be environmentally acceptable and therefore it is a requirement to reduce aero-acoustic noise at least below acceptable levels and preferably as much as possible.

In accordance with aspects of the present invention there is provided a flow control arrangement for noise adjustment of an ionised flow about an edge, the arrangement comprising an opposed pole magnetic field at the edge, the opposed pole magnetic field arranged to precipitate electrical flow in the ionised flow to generate a Lorentz force impinging upon the ionised flow about the edge.

Generally, the opposed pole magnetic field is formed by respective permanent magnets. Possibly, the opposed pole magnetic field comprises electromagnets. Possibly, the electromagnets are electively switchable in terms of magnetic field strength.

Generally, the opposed pole magnetic field is arranged to define an electrical flow relative to the ionised flow across the edge.

Possibly, the magnetic field is presented upon mountings to allow displacement relative to the ionised flow. Typically, the displacement is lateral relative to the edge. Possibly, the displacement is tilted relative to the edge. Possibly, the opposed pole magnetic field is formed by respective magnetic segments and each segment is relatively displaceable to each other and/or the edge.

Possibly, the opposed pole magnetic field has a significant proportion which extends substantially away from the edge. Possibly, the opposed pole magnetic field has a substantial portion which extends substantially along the edge. Advantageously, the opposed pole magnetic field is formed by concentric parts.

Embodiments of aspects of the present invention will now be described by way of example with reference to the accompanying drawings in which:

Fig 2 is schematic side view of a typical flow over a leading edge without flow control in accordance with aspects of the present invention;

Fig 3 is a schematic illustration of static pressure fluctuations about an edge without flow control in accordance with aspects of the present invention;

Fig 4 is a schematic part cross section of a first embodiment of a flow control arrangement in accordance with aspects of the present invention;

Fig. 5 is a schematic illustration of electrical current flow induced into an ionised flow in accordance with aspects of the present invention;

Fig. 6 provides a schematic illustration of a magnetic field and associated forces utilised in accordance with aspects of the present invention;

Fig 7 is a schematic perspective of a second flow control arrangement in accordance with aspects of the present invention;

Fig 8 is a schematic side cross section of a leading edge incorporating a third embodiment of a flow control arrangement in accordance with aspects of the present invention;

Fig 9 is schematic side view of the arrangement as depicted in fig 12 illustrating a Lorentz force effecting flow;

Fig 10 is a schematic cross section of ionised fluid flow over an edge in accordance with aspects of the present invention;

Fig 11 is a schematic illustration of flow in terms of static pressure about an edge with flow control in accordance with aspects of the present invention;

Aspects of the present invention provide a flow control arrangement in order to attempt to provide noise adjustment in an ionised flow. Thus, magnetic or electro magnetic means is used to control the flow towards a corresponding acoustic surface. A magnetic actuator in such circumstances will provide a buffer region around the aerofoil edge in order to reduce the static pressure fluctuations which will result from interaction of periodic and non periodic flow disturbances upon a solid surface edge. The magnetic actuator comprises an opposed pole magnetic field in order to stimulate an electrical current in the ionised flow.

When turbulence and non-uniformities in a flow are conveyed around a solid surface edge they result in localised static pressure fluctuations which radiate out as sound waves. Aspects of the present invention slow the transition of the flow towards the surface from free stream flow to flow around the surface. By judicious choice and application of the Lorentz effect a gradual transition can be achieved. Generally a so called impeding force is generated by the Lorentz effect in the flow close to the aerofoil edge surface. In such circumstances it will be understood that the aerodynamically resistive force can be presented in a steady or fluctuating or pulsed or phased sequence relative to the presented aerodynamic disturbance in order to obtain maximum benefits with regard to noise reduction. Furthermore, and as a particular advantage with regard to aircraft, it will understood that the flow control arrangement can be electively and relatively easy modulated or switched off when not required for noise reduction purposes. Thus, with respect to an engine utilised in an aircraft it will be understood that pristine aerodynamics surfaces for non noise sensitive periods of

the operating cycle such as cruise can be defined. In such circumstances provision of the flow control arrangement in accordance with aspects of the present invention does not compromise existing efficiencies with regard to aerodynamic performance within the engine.

A high voltage electric potential between electrodes can ionise a fluid flow and so achieve much lower voltages of magneto-plasma-dynamic activation in order to establish electric currents through the fluid flow. Such electric currents through Lorentz forces will allow control of the fluid flow in use by creating an impeding force.

Aspects of the present invention utilise changes in the stream dynamics around a leading edge of a solid surface such that there is a reduction in static pressure fluctuations which are the precursor of generated noise. In such circumstances there is manipulation of the acoustic response of the 'responding' surface rather than simply manipulating the wake or the flow disturbances caused by an upstream surface in a flow. The impeding or body force per unit volume required to operate in this manner in flow Mach numbers of interest for gas turbine engine operation is far greater than that which can be generated by electrostatic plasma actuators.

Configurations for a number of alternative embodiments of magnetic actuators comprising an opposed pole magnetic field will be described below. It will be noted that the actuators can be formed in a compact size and with a high impeding force per volume as required by particular circumstance. It will be understood that the operating conditions in terms of aerodynamic flow will be relatively well known for an engine. In such circumstances the magnetic actuator utilised in a control arrangement in accordance with aspects of the present invention can be

configured for stages of an operating cycle such as take off or landing when noise will be a particular problem.

Fig 2 illustrates streamlines 310 about an edge of a surface 312. The flow presented to the edge, which may be an aerofoil, is free of upstream disturbances and is provided as a steady flow. The streamlines are shown to be incident on the stagnation point of the aerofoil with the flow splitting to pass either side of the aerofoil.

In practice, however, the flow onto the aerofoil is generally not steady. For example, the flow stream may have a direction that changes or fluctuates over time or the solid surface may be moving e.g. a rotating aerofoil or an upstream feature can create turbulence that is presented to the solid surface. The source of the unsteady fluctuations may be tonal i.e. caused by regular and periodic upstream disturbances or broadband i.e. caused by general upstream turbulence

For a fan OGV, which is an aerofoil in a gas turbine and which is a source of noise during operation, there are significant unsteady static pressure fluctuations around the aerofoil leading edge due to impingement of the upstream fan's wake.

In general, the flow may not be incident on the exact leading edge or come in from a direction exactly normal to the leading edge.

Fig 3 illustrates static pressure fluctuation P_1' as a result of impingement by a flow 320 to a surface 322 having an edge 326. It will be appreciated that the pressure fluctuations P_1' are a result of incident flow disturbances, non-uniformities and turbulence in the adjacent flow 320 and it is these static pressure fluctuations P_1' which generate acoustic noise and which radiate efficiently.

In accordance with some embodiments of the invention an actuator is provided at the leading edge of the surface

either by building onto the surface or embedding the actuator within the surface. The actuator 301 generates forces as a result of Lorentz effects in the ionised fluid flow relative to the actuator. The forces provide a more gradual transition zone which reduces the likelihood of pressure fluctuations and therefore radiation of acoustic waves. The level and extent of such impeding force can be determined by the actuator relative to the degree of ionisation of the flow.

One form of actuator is depicted in Figure 4. A magnetic actuator is formed by two poles 42 of a horse shoe magnet.

The horse shoe magnet is aligned to a leading edge of an aerofoil in the arrangement with the north pole at the apex of the curve of the leading edge and the south pole located a short-way along the suction surface. Locating the poles in this arrangement enables a flow of ionised fluid over both poles with the flow travelling in the same direction. It will be understood with an ionised flow over the edge a resultant impeding force in the flow will be created about the edge. The impeding force will be sufficient to significantly alter flow stream lines around the edge.

If the flow has an incidence angle or direction onto the leading edge that is different to normal it may be possible to move the north pole off the apex of the curve. The stagnation point of the incident flow should, in this arrangement not be upon one of the poles.

The pole pair generate magnetic forces in the direction of arrowheads 44, 45 with a North or a South pole direction dependent upon polarity of the pair 42. It will be noted that the magnetic fields 44, 45 have strong components perpendicular to the leading edge.

By providing an ionised fluid flow through the magnetic field 44, 45 created by the pair 42 it will be understood that a magneto-plasma-dynamic voltage or Lorentz effect is created perpendicular to both the magnetic field 44, 45 and the flow 47.

Fig. 5 provides a schematic illustration of the electrical current flows in the ionised air. Electrical current is shown by the circuit 71 but it will be appreciated in reality this flow is provided within the ionised air created by an appropriate ionisation device in accordance with aspects of the present invention.

The magnetic pole pair may be presented along most or perhaps all of the span of the aerofoil so that the noise may be controlled accordingly. Alternatively, modelling may determine the locations along the span which generate the most noise and the pole pair may be located over a shorter length of the span which includes this or these positions. Electrical current flow 71 in such circumstances flows via a closed path or circuit as illustrated. Generally, at each end of the magnetic pole pair the magneto-plasma-dynamic current is obliged to flow along a path not enjoying the assistance of a magneto-plasma-dynamic voltage. In such circumstances, the flow of current may be improved by particularly ionising the fluid flow as it passes at the ends of the magnetic pole pair. This may be achieved by placing the poles of the magnet pole pair closer together so that the length of current path seen by a voltage is minimised. Such an approach essentially provides a long magnet with a U-shaped cross section where the length of the current path enjoying an MPD stimulation voltage is maximised.

Providing a closed path for the magneto-plasma-dynamic current means that no electrodes are required to make contact with the ionised electrical current. By such an

approach, problems with regard to electrode erosion with consequential reliability and maintenance requirements are avoided.

The impeding force is created by the interaction of a magnetic field with an ionised flow such that an electrical current is generated within the ionised flow and therefore an opposed Lorentz force created. The Lorentz force acts to oppose the motion of the ionised flow and thereby acts to impede and decelerate the flow of fluid.

Control of the Lorentz forces may be used to further facilitate noise reduction from an acoustic responding surface. It should be understood there will also be a force on the flow towards the poles of the magnet actuator 42. The magnet actuator 42 could be formed from permanent or electro magnetic components, possibly with super conducting windings in order to adjust strength and therefore optimise noise reduction in accordance with aspects of the present invention. It will also be appreciated that segmented and concentric configurations of a number of magnetic elements can be utilised to provide the magnetic actuator 101 in accordance with aspects of the present invention. These magnetic elements may comprise permanent as well as electro magnetic elements to vary the effectiveness about an engine in accordance with aspects of the present invention.

By adjusting the magnetic field to define the Lorentz effect and in particular to vary its strength aspects of the present invention may optimise control of flow about an edge to reduce noise. Thus, the Lorentz effect can be adjusted through various settings, pulsing or otherwise modulated in order to adjust the flow in accordance with requirements. The ionisation device for the fluid or air flow could be adjusted in strength to optimise noise reduction again either at various stage settings or by varying pulsing or otherwise modulating ionisation created

within the flow. Generally, the apparatus for ionisation of the flow and the magnetic actuator will be fixed however in some circumstances as indicated preset cycling or adapted modulations are controlled to act as variation in the magnetic field utilised in order to adjust the degree of impeding force. In such circumstances a microphone or other acoustic device could be utilised to listen to noise or for a particular frequency and then adjust the magnetic actuator in response. The force of the ionised plasma due to a magnetic field is significantly greater than that from an electric field alone. In such circumstances aspects of the present invention can utilise a magnetic actuator which is more suitable for use in directly damping acoustic responses in turbo machine reflow velocity cases.

Typically, the magneto-plasma-dynamic magnet pole pair will be formed from a permanent magnet. However, it will be appreciated that advantages can be achieved by utilising an electromagnet combination. An electro magnet may be controlled and adjusted more readily to provide varying conditions. Controlling the strength of the magneto-plasma-dynamic magnet pole pair controls the ionised flow current and therefore the forces that are exerted on the fluid flow.

It will be appreciated that most of the energy to maintain the magneto-plasma-dynamic current in the ionised flow comes from the flow itself passing the magnetic pole pair. This motion is as a result of vehicle motion or motion of the component having the actuator instead of coming from other electrical generators which, if located on-board, add to weight and cost. It will be appreciated that some electrical power will be needed to operate the magneto-plasma-dynamic magnet when provided with variable orientation upon a mechanical actuator or where an electro magnet is used. It will also be appreciated that some

electrical power will be required with regard to the device for ionising the flow through the appropriate electrodes.

Generally, any device used to ionise or generate the ionising flow will be switched off once the magneto-plasma-dynamic current is established. The ionised flow will be maintained by the magnetic field itself created by the magnetic pole pair and the motion of the vehicle upon which the surface is presented. Alternatively, the device for ionising may be switched on permanently to control the level of magneto-plasma-dynamic currents and produce various other electro magnetic effects as required.

Fig. 6 illustrates the Lorentz effect upon the flow 47 towards the aerofoil 41 incorporating the magnetic pole pair 42. The direction of the induced voltages is illustrated by arrowheads 51, 52. It is this electrical current flow in the direction of arrowheads 51, 52 in a circuit which generates the blocking forces that resist impact of the flow onto the leading edge of the aerofoil.

Generally the strength of the magnetic field provided by the magnetic actuator 201 will be set to provide a steady manipulation of the flow streams and so effective damping in the flow. Such an approach will reduce noise generated by unsteady static pressure fluctuations as disturbances in the flow passing over corresponding surfaces either side of the edge 202.

The magnetic actuator comprises a permanent magnet or an electro magnet or a combination in order to achieve a desired magnetic field and therefore electrical current flow with resultant Lorentz force impeding an adjustment to the flow stream lines over the edge 202. The strength and configuration of the actuator 201 will be specified dependent upon expected operating conditions and normally will be configured for a known stage of operation such as take off or landing when noise is a particular problem.

The actuator will generally be shaped for consistency with the form of the aerofoil defining the edge 202. In such circumstances in normal operations such as cruise the pristine nature of the aerofoil configuration will not be impinged by physical perforations or otherwise and therefore the efficiency of such an aerofoil in normal operation will not be compromised by providing a flow control arrangement in accordance with aspects of the present invention.

Fig 7 illustrates a second embodiment of a flow control arrangement 300 in accordance with aspects of the present invention. In the arrangement 300 a magnetic actuator comprises a multitude of opposed pole magnetic fields arranged in a concentric relationship. This concentric relationship provides an asymmetric, or a less symmetric, magnetic field and hence achieves a impeding force with a desired orientation in comparison with the arrangement as depicted in fig 6. Thus, variations with regard to the level of impeding force created by Lorentz effects can be achieved by provision of such asymmetric relationships for the magnetic actuators in accordance with the second embodiment of aspects of the present invention.

Fig 8 illustrates a cross-section through the arrangement as depicted in fig 9. The magnetic actuator defined by segments 302a, 302b creates opposed pole magnetic fields in which electric current 305a, 305b circulates within a surface 302 incorporating the electro magnetic segments.

The direction of the currents 305a, 305b are defined in an air flow 303 which as indicated previously is ionised. The configuration may comprise separate magnetic elements 305a, 305b with a conductive ridge or a unitary component embedded within the surface 302.

In this arrangement, if desired, it is possible to have the central pole of the magnet at the stagnation point of the flow incident onto the edge.

Figs 9 illustrate resultant electrical flow changes around a surface and in particular the edge. The impeding force imparted to the flow results in a displacement in the stream line, effectively extending the influence of the body further upstream. However, since this displacement of streamlines is not due to a solid body but rather due to a magnetic impeding force created by Lorentz processes the displaced flow field provides some capacity for unsteady compensation of the effects of incoming flow non-uniformities.

It will be appreciated with an ionised flow 303 directed at the surface 302 with a magnetic actuator 301 that as indicated above the electrical current flow will generate an impeding force flow in the direction of arrowheads 306. This force 306 will depend upon the degree of ionisation within the flow 303 as well as the strength of the magnet actuator 301 in determining a region 307 which influences the flow 303 in order to avoid flow separation.

Fig 10 illustrates the effect of the magnetic actuator 301 of Fig. 8 embedded within the surface 312 in terms of adjusting the stream lines 310. The magnetic actuator 301 generates forces in the direction of arrowheads 316 as a result of Lorentz effects in the ionised fluid flow relative to the magnetic actuator 301. In such circumstances it will noted that the stream lines 310a have been displaced forwards of the edge 316 and a more gradual transition zone 317 is created reducing the likelihood of pressure fluctuations and therefore radiation of acoustic waves. The displacement of the stream lines 310 is not due to a solid body but due to the impeding force. The level

and extent of such impeding force can be determined by the magnetic actuator relative to the degree of ionisation of the flow illustrated by stream lines 310.

Figure 11 provides a schematic illustration of such variations and their reduction. It will be noted that the flow 320 which is ionised and therefore affected by a magnetic actuator (not shown) results in static pressure fluctuations P_2' of a lesser extent to that when the surface does not have an actuator or the actuator is not operating. The reduction in static pressure fluctuation P_2' is as a result of creation of a damping buffer through an impeding force generated by Lorentz effects as the ionised flow 320 becomes incident upon the magnetic actuator within an edge portion 316. By creating an elective transient zone such pressure fluctuations P_1' (Figure 3) are diminished.

As indicated above, and as will be appreciated, it is important that the air flow in accordance with aspects of the present invention is ionised. The source of such ionisation is not illustrated. However ionisation can be provided by several known methods such as natural ionisation of combustion products, elevated levels resulting from upstream application of high temperatures such as through combustion heat sources, high voltages AC or DC, radio frequency or microwave electric fields, arc, corona and spark electric discharges, dielectric discharge, plasma actuators, laser-induced breakdown, photo-electric emissions from metal surfaces, or ionising radiation such as ultraviolet, X-rays, alpha, beta or gamma rays. A particular form of ionisation within the flow will be chosen dependent upon particular requirements and is necessary in order to allow generation of electrical current and therefore a Lorentz effect impeding force with the transition or buffer zone to adjust flow streams for less static pressure fluctuations in accordance with

aspects of the present invention. It will also be appreciated that some means of generating the elevated levels of ionisation within the flow could be applied to suitable structure or structures upstream of the corresponding surface, whilst others would not require the presence of such a structure.

It will also be appreciated in accordance with aspects of the present invention that the surfaces engaged by the flow could have a high degree of local curvature, such as an aerofoil leading or a trailing edge or sharp corner. Application of a high voltage to such highly curved surfaces will generated a concentrated electrical field local to the high curvature surface feature. An extreme example of such electric fields would be a spike on a known ioniser device. The electric field of such ionising devices could ionise an air flow with the electric field discharging negative ions away from the negative electrode and the resulting positive ions to that electrode. In such situations the attraction of the positive ions clustering around the electrode will again alter the stream lines that flow around the object and hence dampen the effects of flow distribution about the surface. Such reductions in flow disturbance will reduce resultant noise generated by unsteady static pressure fluctuations.

In view of the above it will be appreciated that it is possible electively and switchably to provide a impeding force through Lorentz effects utilising magnetic actuators in accordance with aspects of the present invention whilst in an off state the arrangement does not significantly alter the aerodynamics of an aerofoil or other surface. Thus, a significant noise reduction can be applied at times of an aircraft cycle when required but deactivated at other times. Examples of times where noise may be a problem are during landing and take off procedures.

It will also be understood that aspects of the present invention reduce the source of noise directly, that is to say at the area of acoustic responding surface and therefore other sources of noise in any aero engine can be reduced without resorting to plasma actuation or other method to modify the upstream component boundary of their behaviour alone. For example, extra noise sources could include tone and broadband noise generated by steady and unsteady distortion of the engines inlet flow, impingement on the fan or open rotor or propeller leading edges. Such noise may be significant and due to noise generating flow disturbances not related to shedding from a specific component configured for flow control in accordance with aspects of the present invention. Other sources could include broadband noise generated by the turbulence in a free stream flow when impinging upon a surface such as an outlet guide vane (OGV) other than the wake from that surface. With regard to an open rotor, the incident angle of the plane of the rotor to the local free stream flow may be non-zero resulting in significant additional noise.

By manipulating the flow round the surface directly generating the noise it will be understood that greater benefits may be obtained as this may reduce flow disturbance and non-uniformity related to noise along with adjust the noise resulting from impingement upstream of the component. By utilising electromagnetic dampening using aspects of the present invention arrangements are provided that are far simpler to construct in comparison with plasma discharge devices or the use of a magnetic field device. In some cases the radius of curvature of the acoustic responding surface can be relatively small and might pose difficulties in the design of a suitable actuator. The design of an electromagnetic dampening device as described above where the magnetic field is focused will result in

possibly a tighter degree of curvature for a stronger electrical field, given a particular voltage so enhancing and giving a more pronounced and focused effect.

As indicated above creating an impeding force in order to control an arrangement in accordance with aspects of the present invention is achieved by utilisation of a magnetic actuator. The magnetic actuator may be constructed from a permanent magnetic or electromagnets or a combination of both arranged to create a Lorenz force blocking control for flow or a concentration of positive ions for a similar effect. Arrangements in accordance with aspects of the present invention may be constructed with magnetic actuators with magnetic poles in multiple concentric combinations to increase the force applied to control the flow further. Furthermore, the flow itself may be further ionised by multiple ionisation devices to increase ionisation of the flow.

With respect to magnetic electric field devices it should be understood that these devices in order to provide aspects of the present invention can create steady, modulated or pulsed or suitable phased variations which may be present or adaptive or reactive to a feedback controller with respect to the flow strength created or the ionisation process in order to control singly the noise created about a single edge or a combination of successive components with edges or to reduce the necessary electrical power consumption to create the impeding force whilst achieving the same level of noise reduction. It will be understood that variations can also be applied to the method of ionisation in the flow and therefore the effectiveness of the actuators for creating an impeding force in accordance with aspects of the present invention. Thus, aspects of the present invention achieve through variations in the presented magnetic or electric field as well as a level of

ionisation a capability with regard to adjusting noise levels giving an overall noise benefit in the most economic or practical manner.

It will be understood that utilising magnetic and electric field devices and actuators, along with active phasing of the actuator may lead to partial or complete reduction of some or all of the noise generating mechanisms about an edge.

In accordance with aspects of the present invention the magnetic and electric field created by the actuator can be arranged to create an impeding force which applies along the full span of the edge or alternatively may be applied specifically intermittently as spaced positions along the edge. In such circumstances the impeding force may be applied over one or a number of more sensitive positions upon an edge to give an optimised noise reduction benefit for a smaller actuator footprint and therefore reduced power consumption with respect of the magnetic actuator or an electric field generating device.

For example, it may be the case that noise is generated by the tip vortex of a leading propeller interacting with a downstream propeller in a contra rotating open rotor design. In this circumstance only a limited span wise actuator extending at the tips of the trailing rotor edges will generate noise due to the limited extent of the upstream rotor's vortex. Thus, by application of suitably positioned magnetic actuators in accordance with aspects of the present invention it may be possible to achieve proportionally greater noise reduction for the same actuator area and power consumption. It will be understood that corresponding surface magnetic and electric field damping in accordance with aspects of the present invention through generating a impeding force can be used to reduce noise from various other solid surfaces

in a fluid flow. For example aerofoil leading or trailing edges, struts, sharp edges, cavities, ridges, protrusions and other relatively rapid profile transitions which are sufficient to generate levels of acoustic noise as a result of unsteady static pressure fluctuations in the flow. Aspects of the present invention could be applied to sources of open rotor propeller noise, turbine noise, combustion noise or fan noise, compressor noise or air frame noise.

Aspects of the invention may be used to reduce farfield noise caused by the interaction between a static pressure field in a flow around one surface and another surface travelling relative to the pressure field. Such a situation may be found, for example, in a gas turbine where the trailing edge of a fan rotor moves through the stationary static pressure field of an outlet guide vane. The diffusive nature of the impeding force reduces the unsteady pressure fluctuations.

Such sources need not be limited to aero engines or aircraft and noise reductions can also be obtained for noise generating features on surface vehicles such as cars, buses, commercial vehicles, ships and trains. Furthermore aspects of the present invention could be utilised with regard to air conditioning and cooling fans, wind turbines and other similar devices where a surface interacts with air or other ionisable gases or vapours. It will also be understood that aspects of the present invention may also be utilised with regard to stationery devices such as chimneys, tall buildings and masts when such stationery devices are subject to fluid flows.

Claims

1. A flow control arrangement for noise adjustment of an ionised flow about an edge, the arrangement comprising an opposed pole magnetic field at the edge, the opposed pole magnetic field arranged to precipitate electrical flow in the ionised flow to generate a Lorentz force impinging upon the ionised flow about the edge.

2. An arrangement as claimed in claim 1 wherein the opposed pole magnetic field is formed by respective permanent magnets.

3. An arrangement as claimed in claim 1, wherein the opposed pole magnetic field comprises electromagnets.

4. An arrangement as claimed in claim 3, wherein the electromagnets are electively switchable in terms of magnetic field strength.

5. An arrangement as claimed in any preceding claim, wherein the magnetic field is presented upon mountings to allow displacement relative to the ionised flow.

6. An arrangement as claimed in claim 5 wherein the displacement is lateral relative to the edge.

7. An arrangement as claimed in claim 5 or claim 6 wherein the displacement is tilted relative to the edge.

8. An arrangement as claimed in any preceding claim wherein the opposite pole magnetic field is formed by respective magnetic segments and each segment is relatively displaceable to each other and/or the edge.

9. An arrangement as claimed in any preceding claim wherein the opposed pole magnetic field has a significant proportion which extends substantially away from the edge.

10. An arrangement as claimed in any preceding claim wherein the opposed pole magnetic field has a substantial portion which extends substantially across the edge.

11. An arrangement as claimed in any preceding claim wherein the opposed pole magnetic field is formed by concentric parts.

12. An arrangement according to claim 11, wherein the concentric parts comprise a central magnetic pole along the edge surrounded by an opposing pole spaced from the edge.

13. An arrangement as claimed in any preceding claim wherein the arrangement includes an ionisation device for ionising a flow to provide the ionised flow about the edge.

14. A gas turbine engine including a flow control arrangement as claimed in any preceding claim.

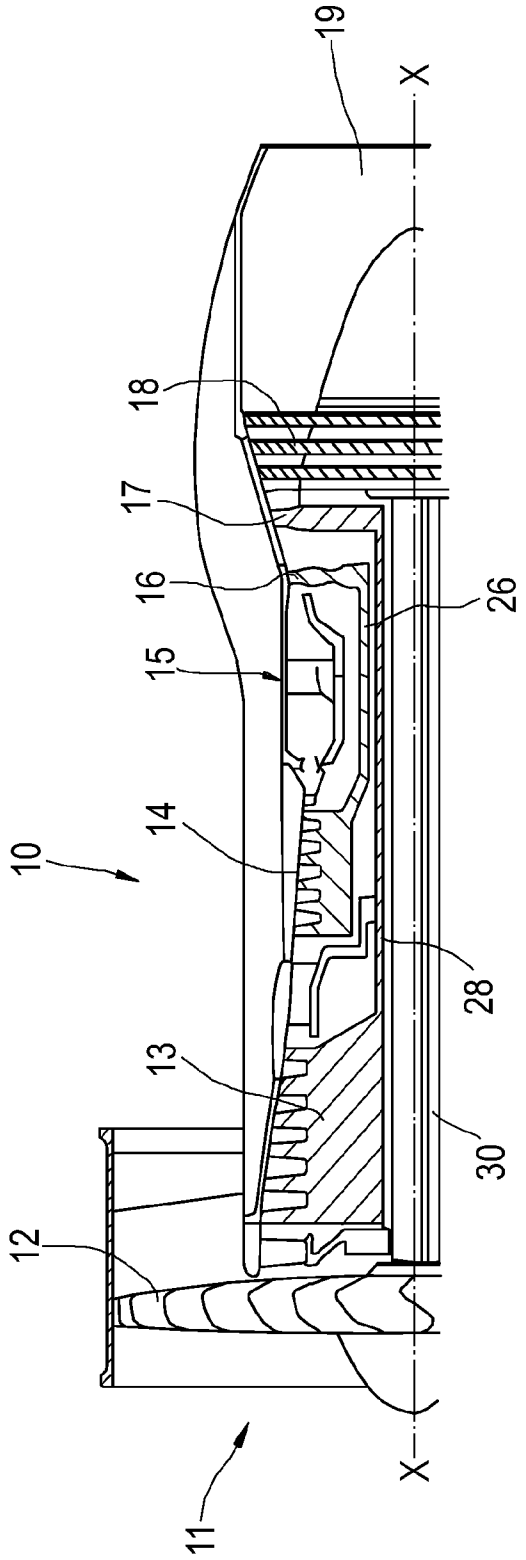

Fig.1

Fig.2

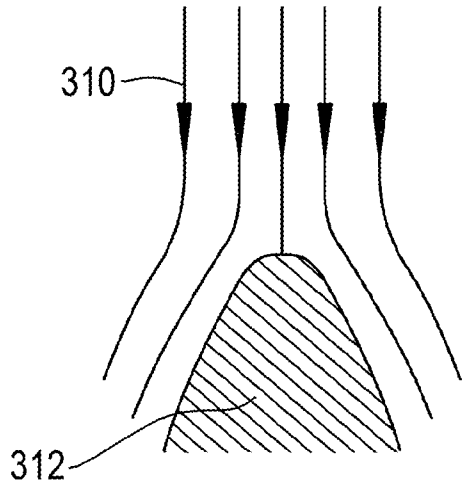

Fig.3

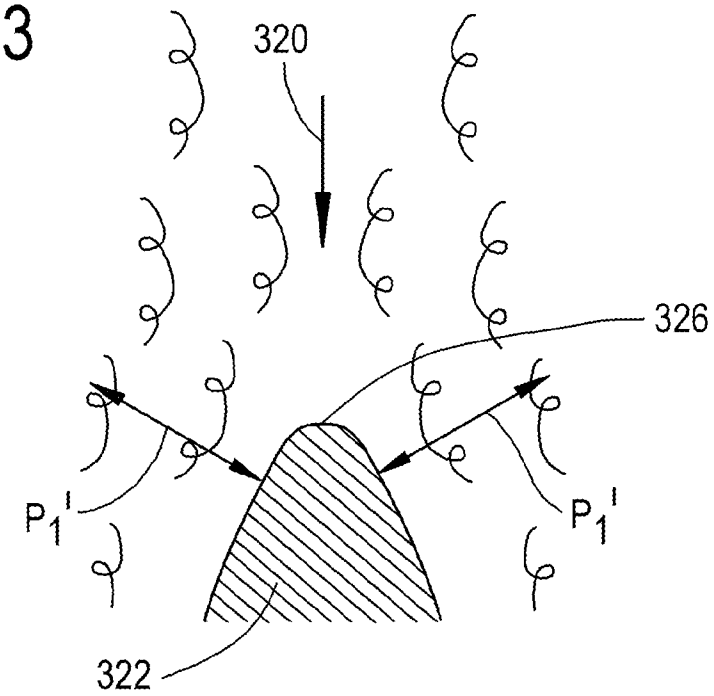

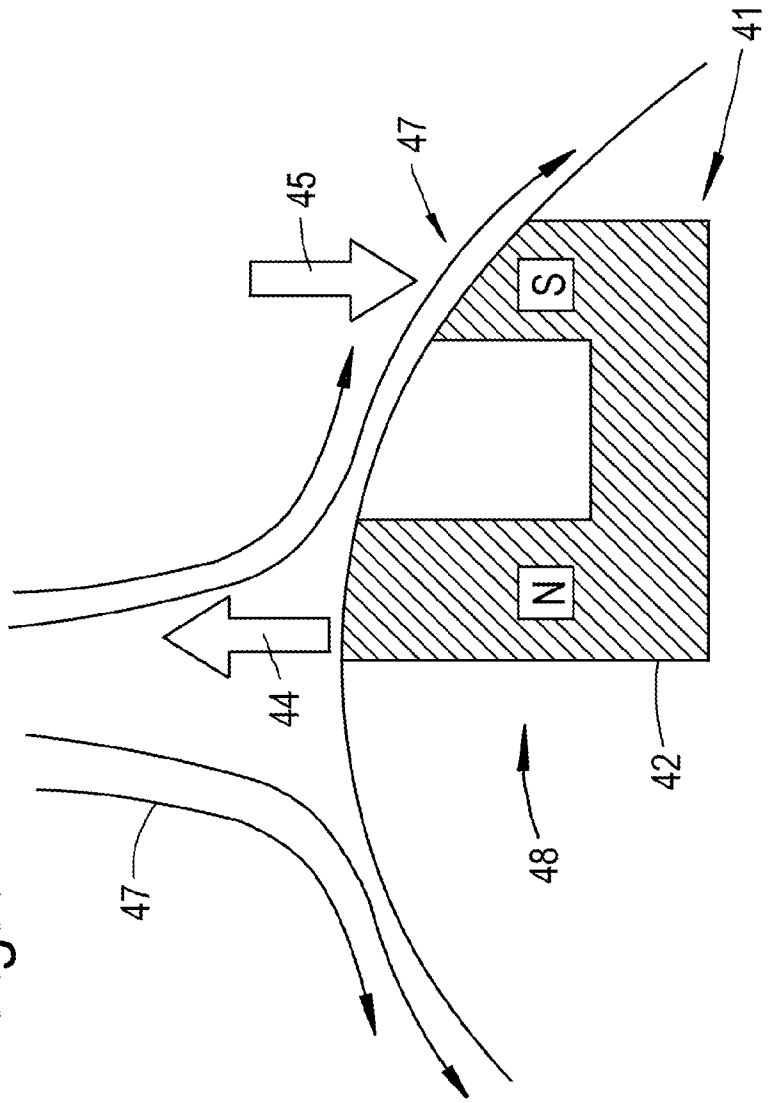

Fig.4

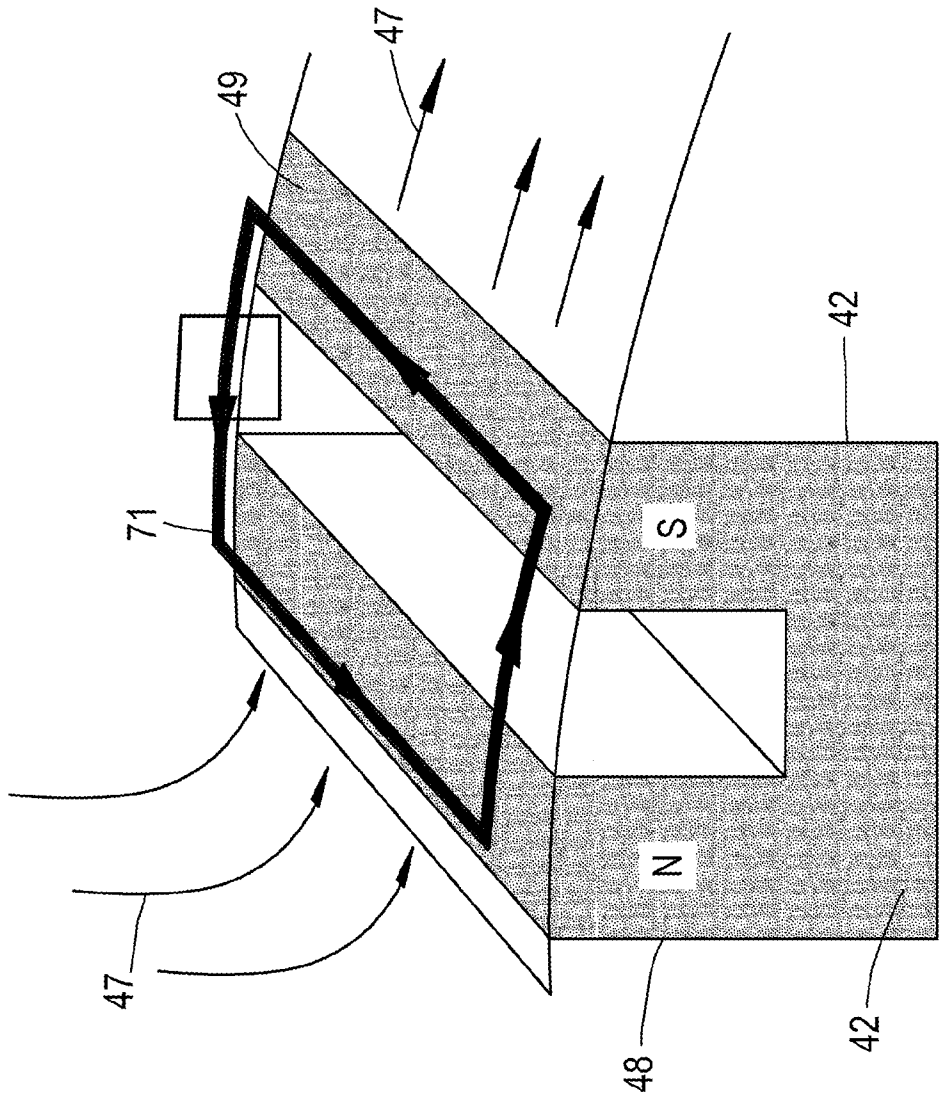

Fig.5

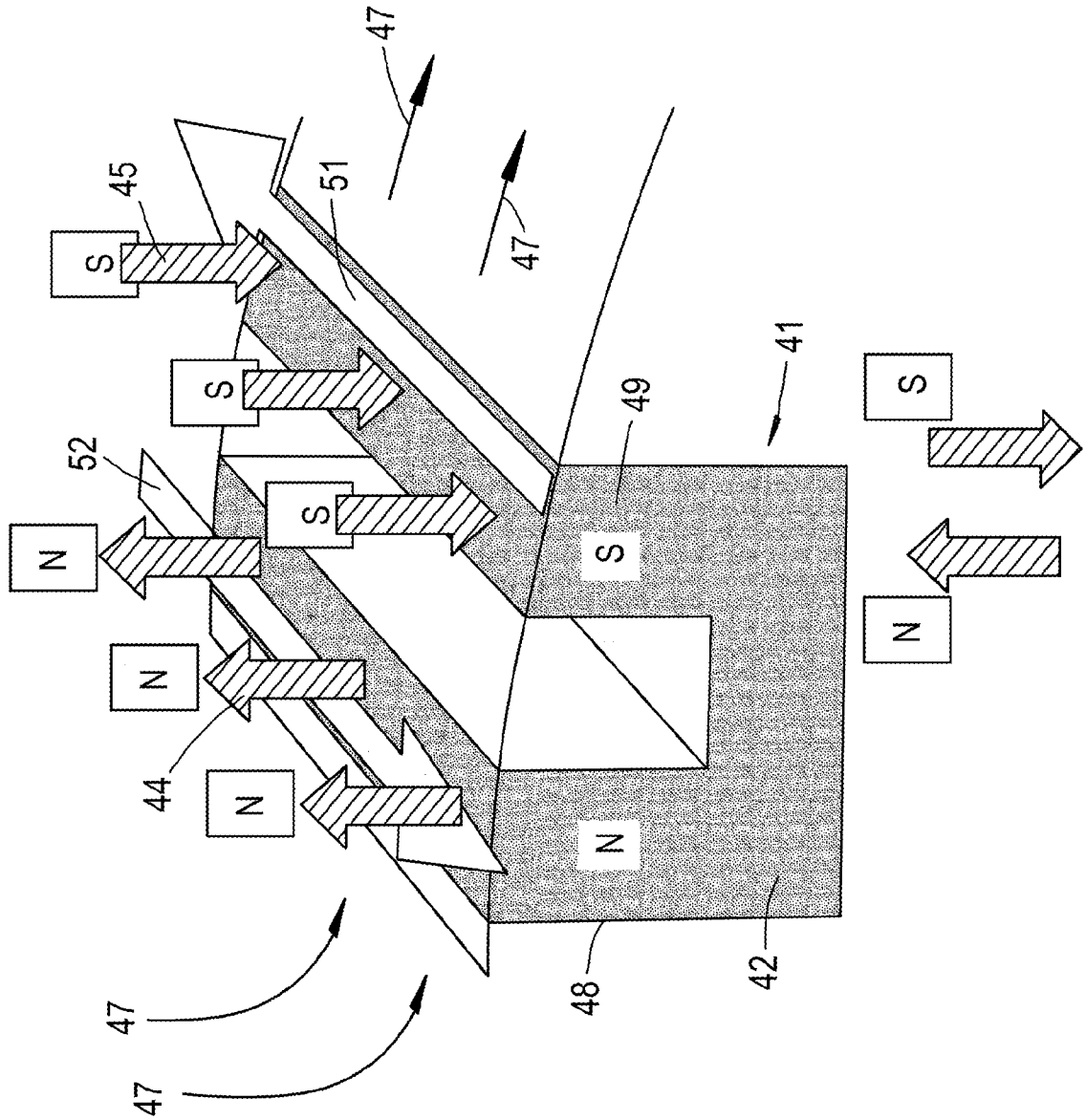

Fig.6

Fig.7

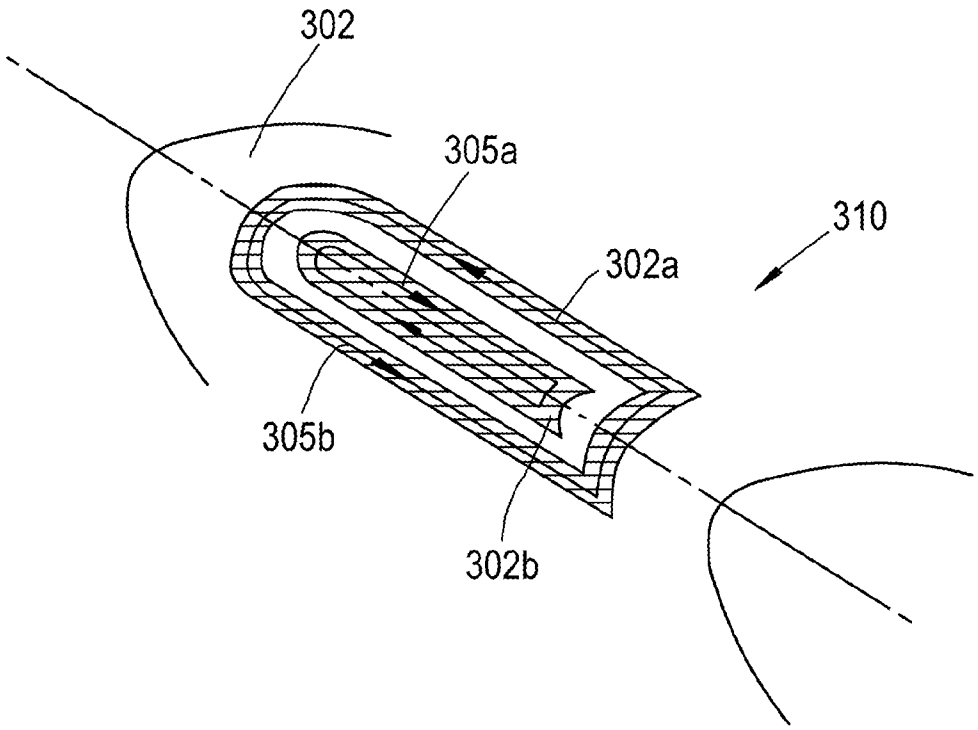

Fig.8

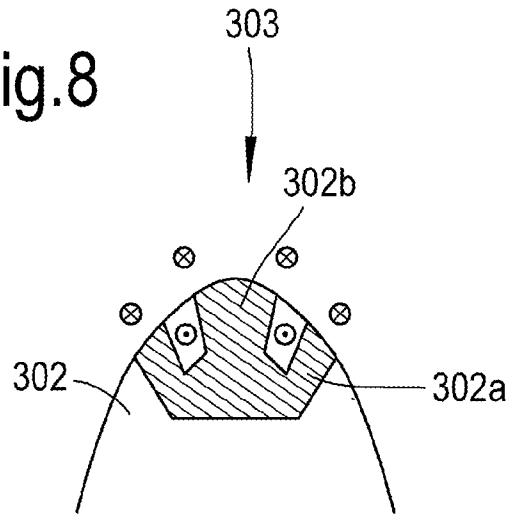

Current Direction

⊗ Into plane of Figure

⊙ Out of plane of Figure

Fig.9

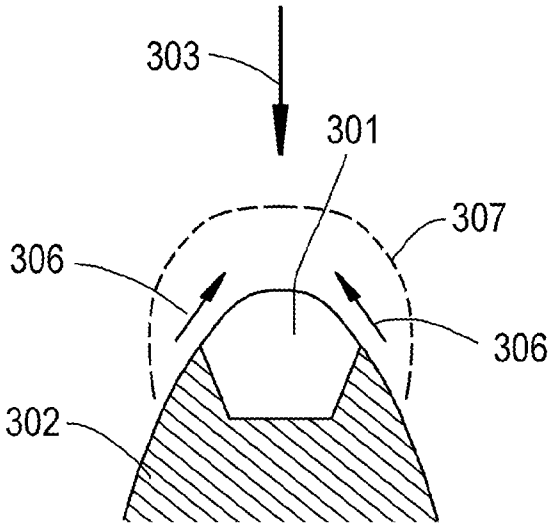

Fig.10

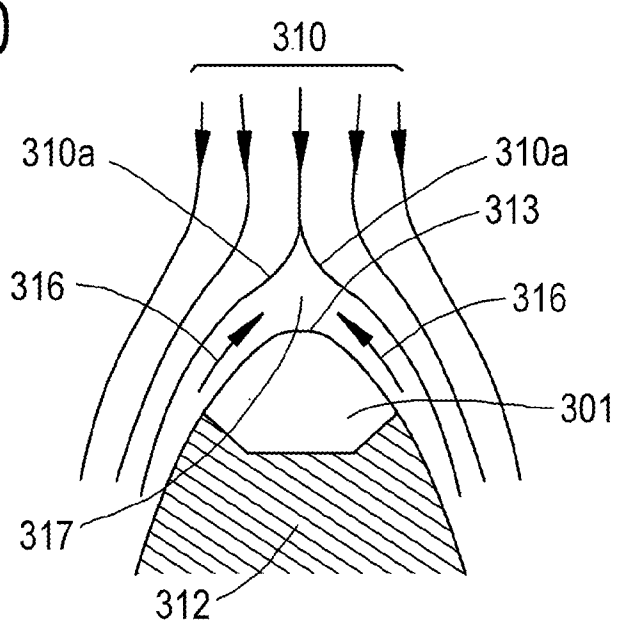

Fig.11

