(12) INTERNATIONAL APPLICATION PUBLISHED UNDER THE PATENT COOPERATION TREATY (PCT)

(19) World Intellectual Property Organization
International Bureau

(43) International Publication Date
23 July 2009 (23.07.2009)

PCT

(10) International Publication Number
WO 2009/090395 A3

(51) International Patent Classification:
F24F 7/08 (2006.01) *F24F 11/00* (2006.01)
F24F 12/00 (2006.01) *F24F 13/20* (2006.01)

(21) International Application Number:
PCT/GB2009/000114

(22) International Filing Date:
15 January 2009 (15.01.2009)

(25) Filing Language: English

(26) Publication Language: English

(30) Priority Data:
0800664.5 15 January 2008 (15.01.2008) GB
0817630.7 25 September 2008 (25.09.2008) GB

(71) Applicant *(for all designated States except US)*: **TITON HARDWARE LTD** [GB/GB]; International House, Peartree Road, Stanway, Colchester, Essex CO3 0JL (GB).

(72) Inventors; and

(75) Inventors/Applicants *(for US only)*: **HOWLETT, Nicholas, Charles** [GB/GB]; Lanham Hall, Hill Green, Lavenham, Suffolk CO10 9LS (GB). **COWELL, Paul, Steven** [GB/GB]; 9 Empress Drive, West Mersea, Colchester, Essex CO5 8BN (GB). **TOMLIN, Michael, Edward** [GB/GB]; 21 Minster Road, Haverhill, Suffolk CB9 0DR (GB). **PEAK, Richard, Allan** [GB/GB]; 65 Harsnett Road, Colchester, Essex CO1 2HT (GB). **FULLER, Daniel, Leonard** [GB/GB]; 31 Kingfisher Close, Haverhill, Suffolk CB9 0JW (GB).

(74) Agents: **MILLER, James, Lionel, Woolverton** et al.; Kilburn & Strode LLP, 20 Red Lion Street, London WC1R 4PJ (GB).

(81) Designated States *(unless otherwise indicated, for every kind of national protection available)*: AE, AG, AL, AM, AO, AT, AU, AZ, BA, BB, BG, BH, BR, BW, BY, BZ, CA, CH, CN, CO, CR, CU, CZ, DE, DK, DM, DO, DZ, EC, EE, EG, ES, FI, GB, GD, GE, GH, GM, GT, HN, HR, HU, ID, IL, IN, IS, JP, KE, KG, KM, KN, KP, KR, KZ, LA, LC, LK, LR, LS, LT, LU, LY, MA, MD, ME, MG, MK, MN, MW, MX, MY, MZ, NA, NG, NI, NO, NZ, OM, PG, PH, PL, PT, RO, RS, RU, SC, SD, SE, SG, SK, SL, SM, ST, SV, SY, TJ, TM, TN, TR, TT, TZ, UA, UG, US, UZ, VC, VN, ZA, ZM, ZW.

(84) Designated States *(unless otherwise indicated, for every kind of regional protection available)*: ARIPO (BW, GH, GM, KE, LS, MW, MZ, NA, SD, SL, SZ, TZ, UG, ZM, ZW), Eurasian (AM, AZ, BY, KG, KZ, MD, RU, TJ, TM), European (AT, BE, BG, CH, CY, CZ, DE, DK, EE, ES, FI, FR, GB, GR, HR, HU, IE, IS, IT, LT, LU, LV, MC, MK, MT, NL, NO, PL, PT, RO, SE, SI, SK, TR), OAPI (BF, BJ, CF, CG, CI, CM, GA, GN, GQ, GW, ML, MR, NE, SN, TD, TG).

Published:

— *with international search report (Art. 21(3))*

— *before the expiration of the time limit for amending the claims and to be republished in the event of receipt of amendments (Rule 48.2(h))*

(88) Date of publication of the international search report:
15 October 2009

(54) Title: VENTILATION HEAT EXCHANGER UNITS AND HOUSING FOR VENTILATION SYSTEMS

FIG. 10

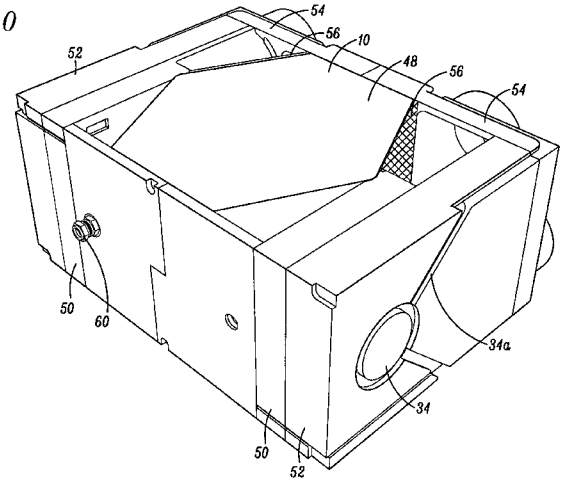

(57) Abstract: A ventilation heat exchanger unit (10) has an outer enclosure and a heat exchanger (48) which may be hexagonal has a face thereof parallel to an outer wall (62, 66) of the enclosure; a ventilation housing (628) has multiple flat inlets (626) and an outlet (634), the inlets and outlet aligned at the same level; and a drive circuit (200, 6100) and calibrating method allow a commissioning step in which air flow is adjusted and fan motor speed set for a run mode.

WO 2009/090395 A3

INTERNATIONAL SEARCH REPORT

International application No
PCT/GB2009/000114

A. CLASSIFICATION OF SUBJECT MATTER
INV. F24F7/08 F24F12/00 F24F13/20 F24F11/00

According to International Patent Classification (IPC) or to both national classification and IPC

B. FIELDS SEARCHED

Minimum documentation searched (classification system followed by classification symbols)
F24F

Documentation searched other than minimum documentation to the extent that such documents are included in the fields searched

Electronic data base consulted during the international search (name of data base and, where practical, search terms used)
EPO-Internal, WPI Data, PAJ

C. DOCUMENTS CONSIDERED TO BE RELEVANT

Category*	Citation of document, with indication, where appropriate, of the relevant passages	Relevant to claim No.
X	DE 101 09 753 A1 (WOELFLE GMBH [DE]) 5 September 2002 (2002-09-05) the whole document	1-15
X	US 2006/252363 A1 (CHARLEBOIS ERIC [CA] ET AL) 9 November 2006 (2006-11-09) the whole document	1-15
X	WO 81/03064 A (BAHCO VENTILATION AB [SE]) 29 October 1981 (1981-10-29) the whole document	1-15
X	EP 0 928 932 A (STORK J E VENTILATOREN BV [NL]) 14 July 1999 (1999-07-14) the whole document	1-15

-/--

[X] Further documents are listed in the continuation of Box C.

[X] See patent family annex.

* Special categories of cited documents :

"A" document defining the general state of the art which is not considered to be of particular relevance

"E" earlier document but published on or after the international filing date

"L" document which may throw doubts on priority claim(s) or which is cited to establish the publication date of another citation or other special reason (as specified)

"O" document referring to an oral disclosure, use, exhibition or other means

"P" document published prior to the international filing date but later than the priority date claimed

"T" later document published after the international filing date or priority date and not in conflict with the application but cited to understand the principle or theory underlying the invention

"X" document of particular relevance; the claimed invention cannot be considered novel or cannot be considered to involve an inventive step when the document is taken alone

"Y" document of particular relevance; the claimed invention cannot be considered to involve an inventive step when the document is combined with one or more other such documents, such combination being obvious to a person skilled in the art.

"&" document member of the same patent family

Date of the actual completion of the international search	Date of mailing of the international search report
31 July 2009	14/08/2009

Name and mailing address of the ISA/	Authorized officer
European Patent Office, P.B. 5818 Patentlaan 2 NL – 2280 HV Rijswijk Tel. (+31-70) 340-2040, Fax: (+31-70) 340-3016	Valenza, Davide

INTERNATIONAL SEARCH REPORT

International application No
PCT/GB2009/000114

C(Continuation). DOCUMENTS CONSIDERED TO BE RELEVANT

Category*	Citation of document, with indication, where appropriate, of the relevant passages	Relevant to claim No.
X	NL 9 002 549 A (INDOLEC B V) 16 June 1992 (1992-06-16) abstract	1-15
X	US 2002/139514 A1 (LAGACE FREDERIC [CA] ET AL) 3 October 2002 (2002-10-03) the whole document	1-15
X	US 5 627 527 A (MEHTA VINAY [US]) 6 May 1997 (1997-05-06)	30-33, 45-51
Y	the whole document	34
X	US 4 642 441 A (KENYON ERIC [AU]) 10 February 1987 (1987-02-10)	30-33, 45-51
Y	the whole document	34

INTERNATIONAL SEARCH REPORT

International application No.
PCT/GB2009/000114

Box No. II Observations where certain claims were found unsearchable (Continuation of item 2 of first sheet)

This international search report has not been established in respect of certain claims under Article 17(2)(a) for the following reasons:

1. ☐ Claims Nos.:
because they relate to subject matter not required to be searched by this Authority, namely:

2. ☐ Claims Nos.:
because they relate to parts of the international application that do not comply with the prescribed requirements to such an extent that no meaningful international search can be carried out, specifically:

3. ☐ Claims Nos.:
because they are dependent claims and are not drafted in accordance with the second and third sentences of Rule 6.4(a).

Box No. III Observations where unity of invention is lacking (Continuation of item 3 of first sheet)

This International Searching Authority found multiple inventions in this international application, as follows:

see additional sheet

1. ☐ As all required additional search fees were timely paid by the applicant, this international search report covers allsearchable claims.

2. ☐ As all searchable claims could be searched without effort justifying an additional fees, this Authority did not invite payment of additional fees.

3. ☒ As only some of the required additional search fees were timely paid by the applicant, this international search reportcovers only those claims for which fees were paid, specifically claims Nos.:

1-15,30-34,45-51

4. ☐ No required additional search fees were timely paid by the applicant. Consequently, this international search report is restricted to the invention first mentioned in the claims; it is covered by claims Nos.:

Remark on Protest

☐ The additional search fees were accompanied by the applicant's protest and, where applicable, the payment of a protest fee.

☐ The additional search fees were accompanied by the applicant's protest but the applicable protest fee was not paid within the time limit specified in the invitation.

☐ No protest accompanied the payment of additional search fees.

FURTHER INFORMATION CONTINUED FROM PCT/ISA/ 210

This International Searching Authority found multiple (groups of) inventions in this international application, as follows:

1. claims: 1-15

A ventilation heat exchanger unit having a cross section with a first face parallel to an outer wall of the outer enclosure.

---

2. claim: 16

A ventilation heat exchanger unit with a counterflow section with a fan.

---

3. claims: 17-24

A ducting housing unit for a ventilation heat exchanger.

---

4. claims: 25-29

A method of calibrating air flow in a ventilation system comprising a fan driven by an electric motor.

---

5. claims: 30-34,45-51

A drive circuit for a fan driven by an electric motor.

---

6. claims: 35-43

A method of operating a ventilator fan driven by an electric motor.

---

7. claim: 44

A control system for a ventilator fan.

---

8. claims: 52-65,69

A housing for a ventilation system having multiple flat inlets and outlets aligned at the same level.

---

9. claims: 66,69

A housing for a central ventilation extractor system having multiple inlets and outlets, an inlet chamber and an exit chamber sloped relative to at least one selected inlet and outlet.

FURTHER INFORMATION CONTINUED FROM PCT/ISA/ 210

---

10. claims: 67,69

A housing for a central ventilation extractor system having multiple inlets and outlets, an inlet chamber and an exit chamber sloped relative to a bottom surface of the housing.

---

11. claims: 68,69

A housing for a central ventilation extractor system having multiple inlets and outlets, an inlet chamber and an exit chamber sloped relative to designed flow direction at the outlet or one of the inlets.

INTERNATIONAL SEARCH REPORT

Information on patent family members

International application No
PCT/GB2009/000114

Patent document cited in search report	Publication date	Patent family member(s)	Publication date
DE 10109753 A1	05-09-2002	NONE	
US 2006252363 A1	09-11-2006	CA 2492294 A1	12-07-2006
WO 8103064 A	29-10-1981	EP 0050126 A1	28-04-1982
		SE 8002896 A	18-10-1981
		US 4377201 A	22-03-1983
EP 0928932 A	14-07-1999	DE 69901352 D1	06-06-2002
		DE 69901352 T2	28-11-2002
		DK 928932 T3	19-08-2002
		NL 1009747 C2	12-07-1999
NL 9002549 A	16-06-1992	NONE	
US 2002139514 A1	03-10-2002	US 2002050338 A1	02-05-2002
US 5627527 A	06-05-1997	US 5528229 A	18-06-1996
US 4642441 A	10-02-1987	AU 8671682 A	24-02-1983
		CA 1232249 A1	02-02-1988
		DE 3272307 D1	04-09-1986
		JP 1058432 B	12-12-1989
		JP 1580988 C	11-10-1990
		JP 58092751 A	02-06-1983
		NZ 201460 A	12-11-1986
		ZA 8205872 A	29-06-1983