B. A. BERGER.

TILTING MACHINE OR BOTTLE HOLDER.

APPLICATION FILED MAY 7, 1915.

1,188,610.

Patented June 27, 1916.

2 SHEETS—SHEET 1.

Fig. 1.

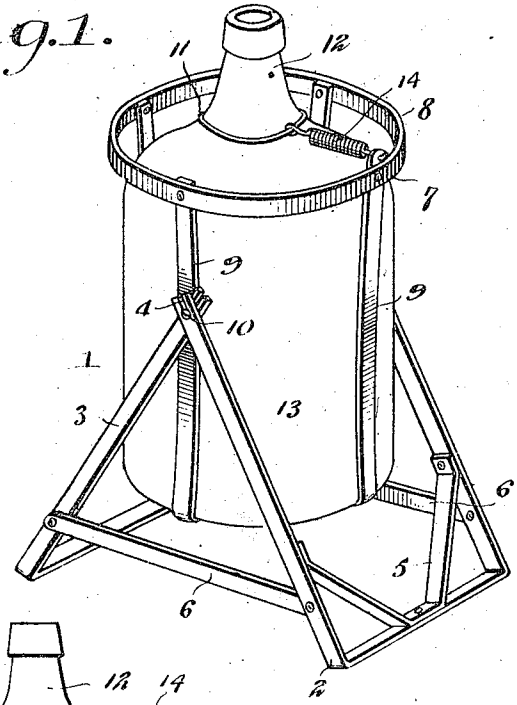

Fig. 2.

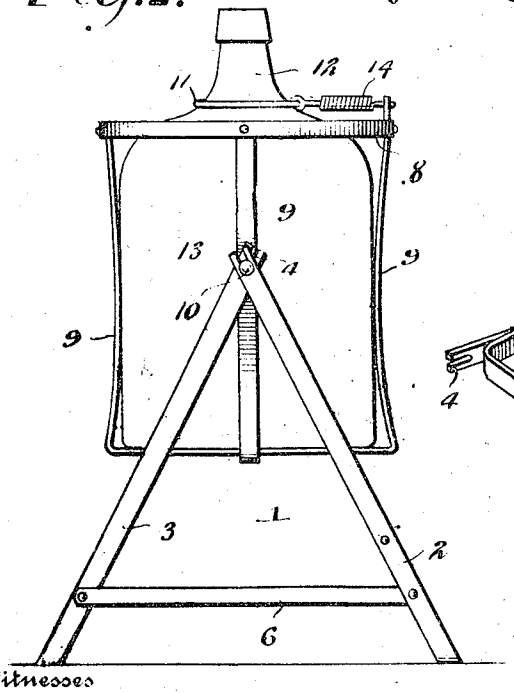

Fig. 3.

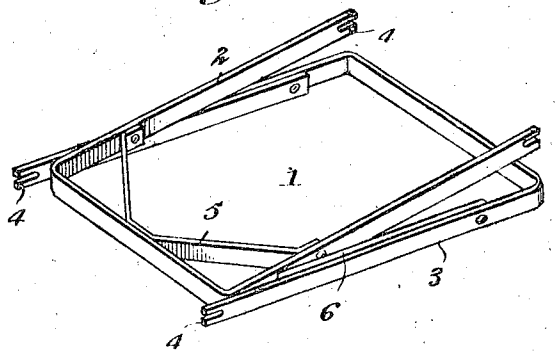

Witnesses

Frederick W. Ely.

D. W. Gould.

Inventor

Bruno A. Berger.

By Victor J. Evans

Attorney

B. A. BERGER.

TILTING MACHINE OR BOTTLE HOLDER.

APPLICATION FILED MAY 7, 1915.

1,188,610.

Patented June 27, 1916.

2 SHEETS—SHEET 2.

Fig. 4.

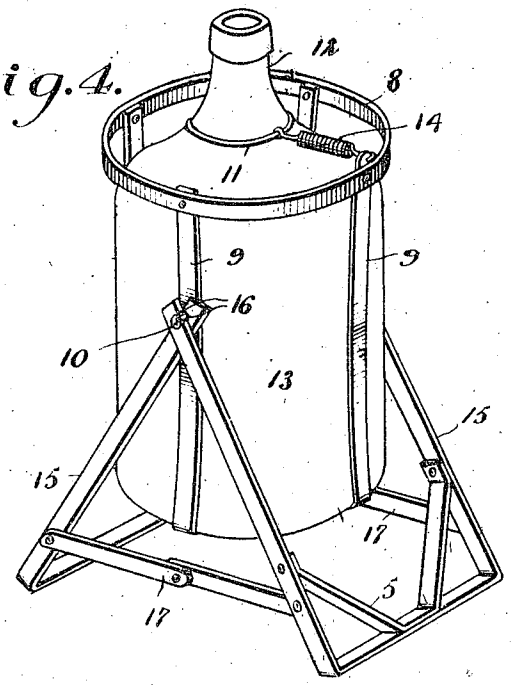

Fig. 7.

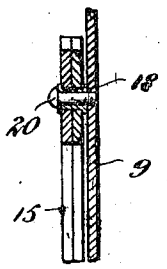

Fig. 6.

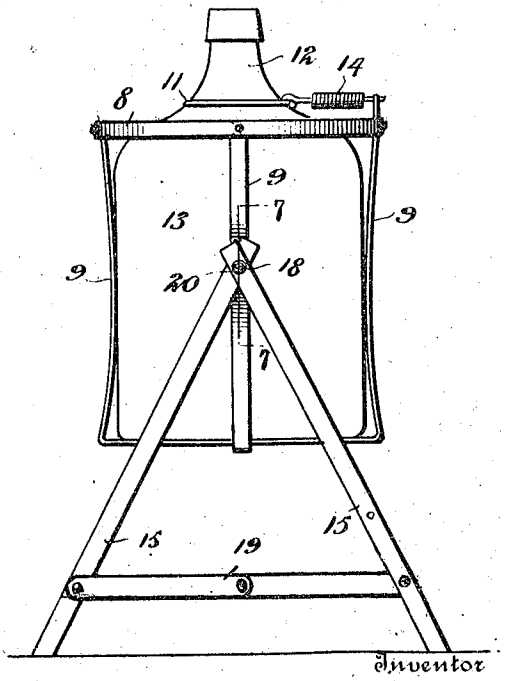

Fig. 5.

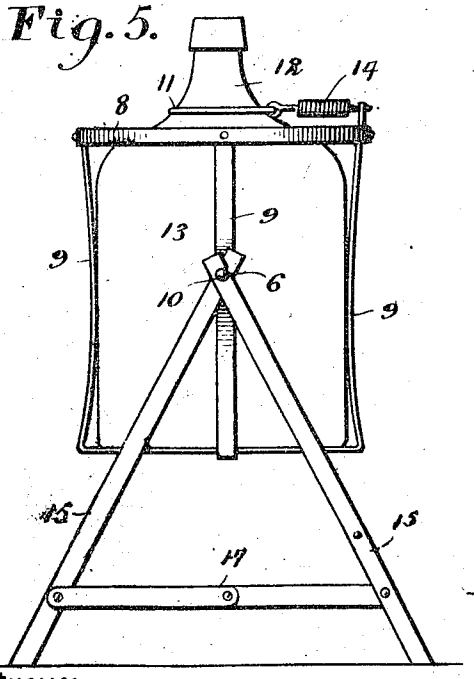

Witnesses

Frederick W. Ely.

D. W. Gould.

Inventor

Bruno A. Berger

By Victor J. Evans

Attorney

UNITED STATES PATENT OFFICE.

BRUNO ALBERT BERGER, OF RICHMOND, VIRGINIA, ASSIGNOR TO BERGER SPECIALTY MANUFACTURING COMPANY, INC., OF RICHMOND, VIRGINIA, A CORPORATION OF VIRGINIA.

TILTING MACHINE OR BOTTLE-HOLDER.

1,188,610. Specification of Letters Patent. Patented June 27, 1916.

Application filed May 7, 1915. Serial No. 26,595.

To all whom it may concern:

Be it known that I, BRUNO ALBERT BERGER, a citizen of the United States, residing at Richmond, in the county of Henrico and State of Virginia, have invented new and useful Improvements in Tilting Machines or Bottle-Holders, of which the following is a specification.

The invention relates to an improved holder for water containers and the like, constructed with a view to permitting a proper tilting of the holder to deliver the fluid from the container.

The main object of the present invention is the provision of a holder of this type, in which the container may be readily placed and secured against accidental displacement, the holder as an entirety being constructed for collapsing to permit its occupying comparatively small space when not desired for use.

The invention in the preferred form of details will be described in the following specification, reference being had particularly to the accompanying drawings, in which:—

Figure 1 is a perspective view of the holders, the same being shown in operative position. Fig. 2 is a side elevation of the same. Fig. 3 is a perspective view of the holder collapsed. Fig. 4 is a perspective view of a modified form of holder; Fig. 5 is a side elevation of the same. Fig. 6 is a side elevation of a further form of the holder. Fig. 7 is a section on line 7—7 of Fig. 6.

Referring particularly to the accompanying drawings, the improved holder comprises a supporting frame 1 including duplicate U-shaped metallic strips 2 and 3, the terminals of the free ends of the arms of such strips being formed with longitudinally extending bearing recesses 4. The respective frame strips may be braced as at 5 if desired, and so connected by spreading the strip 6 pivotally connected to each frame and adapted when in operative position to hold the bottom of the cross bars of the frame spread or in spaced relation to provide a suitable supporting base.

A cage 7 is arranged to coöperate with the supporting frame, and comprises a circular member 8, from which depend U-shaped strips 9 having their upper free ends secured to the section 8 and their cross bars disposed in right angled relation and riveted to provide the bottom of the cage. The upright portions of the U-strips are preferably inwardly curved in order to bear against the container and aid in preventing it from accidental displacement from the cage.

At an appropriate point in the length of two of the opposing uprights of the U-strips are provided trunnions 10, designed to rotatably support the cage in a manner to be later described. One of the uprights is extended above the ring section 8 and provided with a retainer in the form of a ring 11, designed to engage the neck 12 of the liquid container 13, and an extensible spring 14 connecting said ring and a hook engaging the extended portion of the upright of the strip.

The cage is rotatably supported in the frame by engaging the trunnions in the slots at the upper ends of the U-shaped frame bars, the slots of adjacent bars being brought into registry and by reason of the angular relation of the bars with respect to each other, the registry of the slots forms in effect a partial lock to prevent vertical movement of the trunnions.

Referring particularly to Figs. 4 and 5, it will be noted that the modified form of holder includes U-shaped metallic strips 15, the upright portions of which are formed near their upper ends with slots 16 extending inwardly from the side edges of the uprights, so that the strips together form a bearing opening for the trunnions 10 of the cage, the cage trunnions when within the slots serving to lock the strips with relation to each other and to hold the trunnions against accidental displacement. The lower ends of the frames are connected by spreading strips 17 which may be arranged as described in connection with the preferred structure or if desired may be pivotally secured at their respective ends to the U-frames and to each other, thereby providing a spreading strip which in effect centrally hinges to permit the desired folding.

In Figs. 6 and 7, I have shown a slightly different form of holder in which a structure of the frame strips, spreading strips and connecting parts is similar to that previously described. In this type the relatively upper ends of the uprights of the U-frames are formed with openings in which is secured a ferrule or sleeve 18 more or less permanently actuating the uprights at dif-

ferent points, as shown. The spreading strips 19 in this form may be of the hinged type or removably connected at one end as in the preferred form. The cage in this instance has removably headed trunnions 20 which are adapted to be passed through the bearing sleeves from the outer ends and removably fixed to the cage in an appropriate manner. With the containers in place, the cage may be tilted to deliver the fluid from the container as may be desired, the container being held against accidental displacement in the cage in the manner described.

What is claimed is:—

A holder for water containers including a skeleton frame, a skeleton cage removably connected to the frame for swinging movement therein, a ring formed to removably engage the neck of a container adapted to be seated in the cage, and a coil spring having one terminal engaging the cage and the opposite terminal engaging the ring, whereby the ring is adapted to be moved to a position wholly exteriorly of the cage to permit the introduction and withdrawal of the container or into the position approximately centrally of the cage to engage the neck of the container.

In testimony whereof I affix my signature in presence of two witnesses.

BRUNO ALBERT BERGER.

Witnesses:
C. E. LUMPKIN,
ALLEN G. COLLINS.