(No Model.)

J. KILBURN.

SPINDLE BEARING.

No. 590,318. Patented Sept. 21, 1897.

FIG. 2.

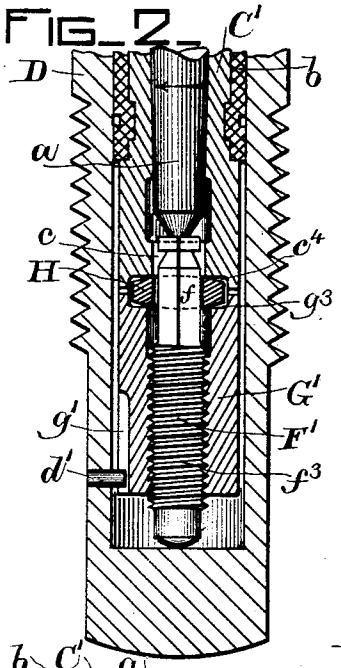

FIG. 1.

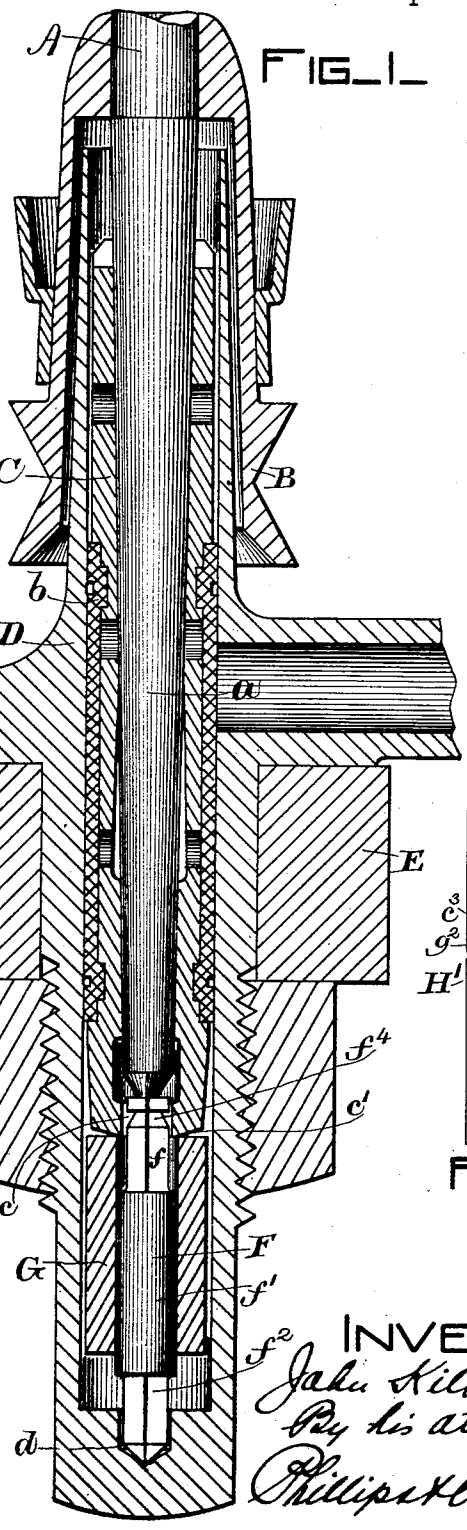

FIG. 4.

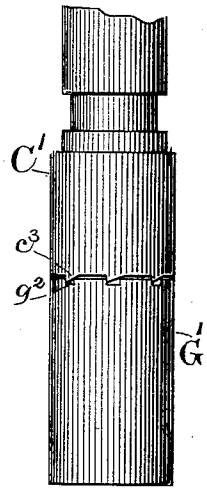

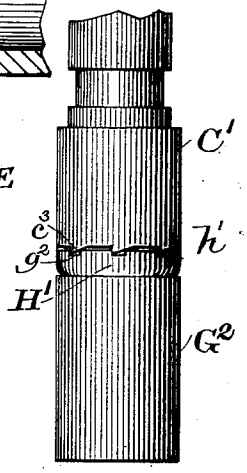

FIG. 5.

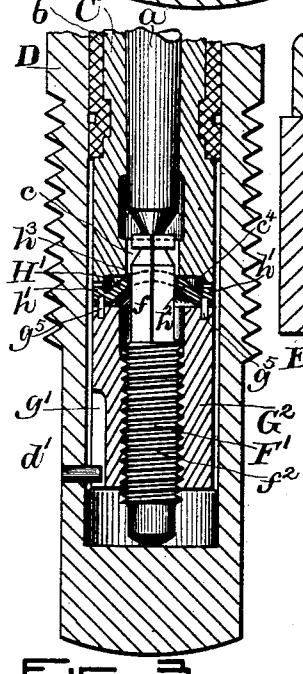

FIG. 3.

WITNESSES

W. E. Shannon

C. E. Hyde.

INVENTOR

John Kilburn

By his attorneys,

Phillips & Anderson.

THE NORRIS PETERS CO., PHOTO-LITHO., WASHINGTON, D. C.

UNITED STATES PATENT OFFICE.

JOHN KILBURN, OF BELMONT, MASSACHUSETTS.

SPINDLE-BEARING.

SPECIFICATION forming part of Letters Patent No. 590,318, dated September 21, 1897.

Application filed December 2, 1896. Serial No. 614,254. (No model.)

To all whom it may concern:

Be it known that I, JOHN KILBURN, a citizen of the United States, residing at Belmont, in the county of Middlesex and State of Massachusetts, have invented certain new and useful Improvements in Spindle-Bearings; and I do hereby declare the following to be a full, clear, and exact description of the invention, such as will enable others skilled in the art to which it appertains to make and use the same.

The present invention relates to spindles of the self-centering or "top" type, in which the rotating spindle is adapted to find its true center of rotation under an unbalanced load. As commonly constructed these spindles are provided with a tapering pintle or stem which fits into a correspondingly-tapered bearing in a bolster or support, and the end of the pintle rests upon and is supported by a block or step in such a position relatively to the bolster that the spindle-pintle shall fit easily the bearing in the bolster and be capable of a rapid and easy rotation therein. The rapid rotation of the spindle causes the end of its pintle to wear away or to wear into the step, thus dropping lower into the bolster and to bind in the tapered bearing of the bolster, increasing the friction and retarding its free rotation. It is the practice to provide these spindle-supports with relatively adjustable bolsters and steps in order that as the spindle-pintle wears away or wears into the step they may be adjusted relatively to each other to prevent the spindle-pintle from binding in the bolster and to accommodate for the wearing of the parts, as above stated. It has heretofore been proposed to provide for this relative adjustment of the bolster and step either by raising the step longitudinally within the bolster or by lowering the bolster upon the step.

The object of the present invention is to provide improved means for securing the adjustment of the bolster and step above referred to; and to such end it consists of the several devices and combinations of devices hereinafter set forth and claimed.

The invention is illustrated in the accompanying drawings, in which—

Figure 1 shows a longitudinal section through a spindle-support embodying the same, the lower portion of the spindle and other parts being shown in elevation. Figs. 2 and 3 show in longitudinal sections modifications of the invention. Figs. 4 and 5 show, in side elevation, details of construction of the invention as illustrated in Figs. 2 and 3.

In the drawings, Fig. 1, A represents the lower portion of a spindle having the usual tapered pintle *a* and whirl B.

C represents the bolster, which has the usual interior tapered bearing in which the spindle-pintle is received and rotated and which is surrounded by the usual wicking or packing *b*.

D represents the bolster-case, and E the spindle-rail.

All of the above-mentioned parts, except as hereinafter specified, may be of any usual or preferred construction.

F represents a pintle which at its upper end is provided with a step portion *f*, which projects into the aperture *c* in the lower end of the bolster in a position to receive and support upon its end the end of the spindle-pintle *a*.

For the purpose of adjusting the relative longitudinal position of the bolster and step without removing the parts from the bolster-case in the form of my invention shown in the drawings I have provided a bolster-support which surrounds and is movable upon the step-pintle and upon which the bolster loosely rests and by adjusting the bolster-support upon the pintle to raise or lower the bolster, whereby the relative longitudinal position of the bolster and step is adjusted.

In the form of my invention shown in Fig. 1 the pintle F has a cylindrical portion *f'* below the step portion *f*, which is fitted by a loose driving fit within a tubular sleeve G, the upper end of which supports the bolster.

The lower end of the bolster C is preferably rounded or convex, as shown at *c'*, whereby it is free to have a slight lateral rocking movement upon the support G under the gyrating movement imparted to it by the spindle A in its efforts to find its true center of rotation.

The bolster C is restrained from rotating with the spindle A by preferably forming the aperture *c* in its lower end of a polygonal shape in cross-section, or any other shape other than round, and the step *f* of the pintle

F of a corresponding shape, but somewhat smaller in cross-section than the aperture *c*.

The pintle F is restrained from rotation by any suitable or convenient means, as illustrated in the drawings. The lower end is provided with a polygonal portion f^2, which fits into a similarly-shaped recess *d* in the bolster-case D. In the above-suggested arrangement as the spindle-pintle *a* wears away or wears into the step *f* the bolster-support G is adjusted to lower the bolster by removing the spindle and by striking the top of the bolster C with some suitable instrument, causing the end thereof which rests upon the support G to move said support G downward upon the pintle F, to thus bring the bolster C into a lower position upon the step *f* and the step *f* farther into the bolster C.

In the forms of the present invention illustrated in Figs. 2 to 5 the bolster is restrained from rotation with the spindle, but is adapted to be rotated in an opposite direction for the purpose of adjusting the bolster-support longitudinally on the pintle to adjust the step in the bolster without removing the bolster from the bolster-case or lifting it from its position in the case.

Looking at Figs. 2 and 4, C′ represents the bolster, G′ the bolster-support, and F′ the pintle. The bolster C′ rests upon the bolster-support G′ and is connected with the pintle F in such a manner that a rotation of the bolster C′ will cause a movement of the support G′ upon the pintle F′. The pintle F′ in this instance has a step portion *f*, below which it has a threaded section f^3, which fits into a threaded bearing in the sleeve or bolster support G′. The end of the pintle F′ in this form of the present invention rests upon the bottom of the bolster-case, it being preferably rounded, so that it is free to turn without much friction when making an adjustment of the bolster-support. The bolster-support G′ is free to move vertically on the pintle F′, but is restrained from rotary movement by any suitable means, such as a pin *d*′, driven through the bolster-case and engaging a slot *g*′ in the bolster-support.

By turning the pintle F′ the bolster-support G′ is caused to travel vertically along the bolster C′ to adjust the relative position of the bolster and step, and, as shown, the pintle F′ is arranged to be turned without removal from the bolster-case.

The pintle F′ is arranged to be turned to raise or lower the bolster-support by the turning of the bolster by means of the polygonal step portion *f* fitting a similar shaped opening *c* in the end of the bolster C′. It is preferred that the bolster be restrained from rotation with the spindle but permitted to be turned in the opposite direction to adjust the bolster-support, as before stated, and to secure such result, and also to provide an inclined rest or bearing for the bolster, I have provided a clutch connection between the bolster and bolster-support. This clutch connection may conveniently consist of the teeth c^3, having inclined tops and perpendicular ends, which are formed upon the bottom of the bolster C′, and the rectangular teeth g^2, formed on the top of the bolster-support G′, or the bolster-support G′ may have similar teeth to the teeth c^3, but beveled in the opposite direction.

As shown, the spindle A is arranged to rotate in the direction of the arrow, Fig. 2, and by means of the clutch connection c^3 and g^2 the bolster C′ is prevented from rotating therewith, but it is capable of being turned in the opposite direction to adjust the bolster-support, as before stated.

H represents a rocker-washer which is preferably convex upon its top and bottom and which is interposed between the top of the bolster-support and the bottom of the bolster, it being retained in the chamber formed by the recess c^4 in the bottom of the bolster C′ and the recess g^3 in the top of the bolster-support G′. The rocker-washer H is apertured for the free passage therethrough of the step portion *f* of the pintle F′, and is preferably of such thickness that when the parts are assembled the teeth c^3 and g^2 will be permitted to engage but not to bottom, and thus the bolster C′ will be permitted to have a slight lateral rocking movement to adapt the spindle to center itself under an unbalanced load.

In the form of my invention shown in Figs. 3 and 5 the lower clutch member and the rocker-washer H′ are stamped up out of sheet metal, the clutch member being formed upon the flange *h*′ and the dome-shaped portion h^2, forming a rocking bearing for the bolster C′. The rocker-washer H′ is secured to the pintle-sleeve or bolster-support G^2 by any suitable means, such as the pins g^5, and the aperture h^3 is circular in shape to allow the step portion *f* of the pintle F′ to turn freely therein. In other respects the construction is the same as shown in Figs. 2 and 4.

In the forms of the present invention illustrated in Figs. 2 to 5 the parts are constructed for a rotation of the spindle in the direction of the arrow, Fig. 2, and for a rotation of the bolster in an opposite direction for the purpose of adjustment; but it is obvious that the construction could be reversed and the spindle adapted for rotation in a direction opposite to the direction indicated by the arrow.

In assembling the parts the pintle and bolster-support are properly adjusted and dropped into the bolster-case and the bolster and spindle placed in position, and as the rotation of the spindle causes the end of the pintle *a* to wear away or to wear into the step, in the form of the invention shown in Fig. 1, the top of the bolster C is given a light blow with a suitable implement and causes the bolster-support G to move downwardly

upon the pintle F, and thus to lower the bolster and bring the step *f* higher within the bolster C. In the forms shown in Figs. 2 to 5 as the spindle-pintle wears away or wears into the step *f* the bolster C′ is turned by a suitable implement in a direction opposite to the direction of rotation of the spindle, and by turning the pintle F′ will, by means of the threaded connection f^3 with the bolster-supports G′ or G^2, cause the support to move along the pintle F′ and permit the bolster to fall to a lower position relative to the step *f*. In turning the bolster to make the adjustment the teeth c^3 and g^2 will ride over each other, and when the proper adjustment has been secured the teeth c^3 and g^2 will again interlock, restraining the bolster C′ from rotating with the spindle and retaining the parts in their adjusted position.

For the purpose of enabling the pintle and bolster support to be readily removed from the bolster-case the top of the pintle is conveniently provided with a notch or groove f^4, whereby it may be readily grasped by a suitable tool and drawn from the bolster-case.

Having fully described my invention and its mode of operation, I claim as new and desire to protect by Letters Patent of the United States—

1. The combination with a bolster-case having a closed bottom, of a bolster, a bolster-support within the case and means for vertically adjusting the bolster-support relatively to the step, without removal from the bolster-case, substantially as described.

2. The combination with a bolster, of a step-pintle, and a bolster-support carried by said pintle, substantially as described.

3. The combination with a bolster, of a step-pintle, and a bolster-support carried by and movable along said pintle, substantially as described.

4. The combination with a bolster-case and bolster, of a vertically-adjustable support for the bolster within the case, the bolster resting upon the bolster-support and arranged to adjust said bolster-support by a movement of the bolster, substantially as described.

5. The combination with a bolster, of a vertically-adjustable support therefor, a pintle carrying said support and means for adjusting said support along the pintle by movement of the bolster, substantially as described.

6. The combination with a bolster and its step, of a vertically-adjustable support for the bolster, and a rocking bearing between the bolster and its support, substantially as described.

7. The combination with a bolster, of a vertically-adjustable bolster-support, arranged to be adjusted by a vertical movement of the bolster, substantially as described.

8. The combination with a bolster-case having a closed bottom and a bolster within the case, of a vertically-adjustable bolster-support within the case, and means to restrain said support from rotation, substantially as described.

9. The combination with a bolster, of a bolster-support, a step-pintle fitted with a driving fit to said bolster-support, substantially as described.

10. The combination with a bolster and its case, of a step-pintle polygonal in section adjacent to its opposite ends, a recess in the bottom of the bolster-case engaged by the lower end of said pintle, and a recess in the base of the bolster engaging the upper end of said pintle, substantially as described.

11. The combination with a bolster-case, of a frictionally-supported bolster, a step, and means to change the relative vertical position of the bolster and step by a vertical movement of the bolster, substantially as described.

In testimony whereof I affix my signature in presence of two witnesses.

JOHN KILBURN.

Witnesses:
A. E. WHYTE,
A. O. ORNE.