Aug. 22, 1961 H. H. GEORGE 2,997,255

MICROWAVE MODULATING ATTENUATOR ROLL STABILIZATION SYSTEM

Filed Jan. 14, 1955 3 Sheets-Sheet 1

FIG. 1

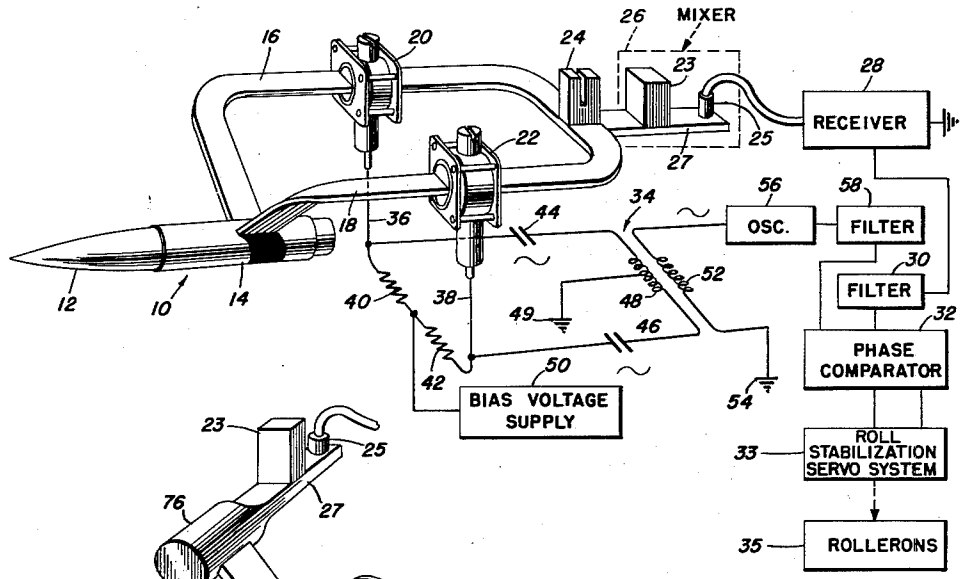

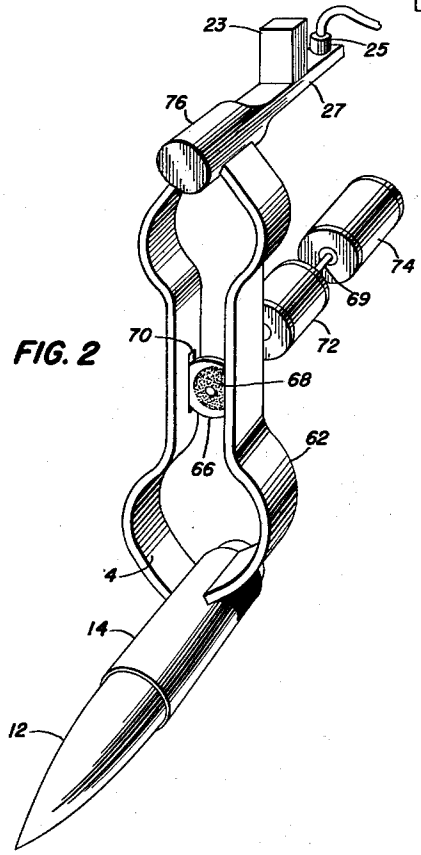

FIG. 2

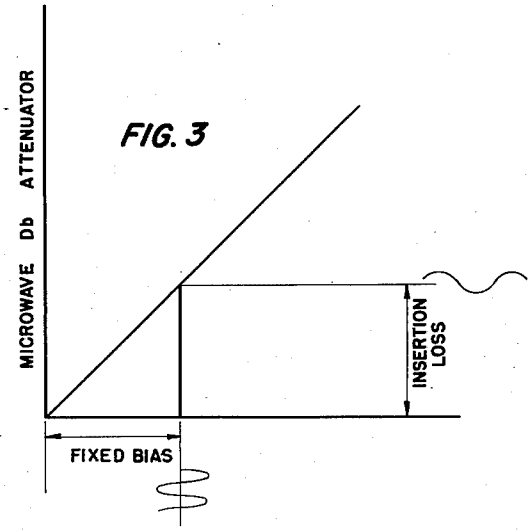

FIG. 3

INVENTOR.
HENRY H. GEORGE
BY G. D. O'Brien
Q. Baxter Warner
ATTORNEYS

Aug. 22, 1961 H. H. GEORGE 2,997,255

MICROWAVE MODULATING ATTENUATOR ROLL STABILIZATION SYSTEM

Filed Jan. 14, 1955 3 Sheets-Sheet 2

FIG. 4

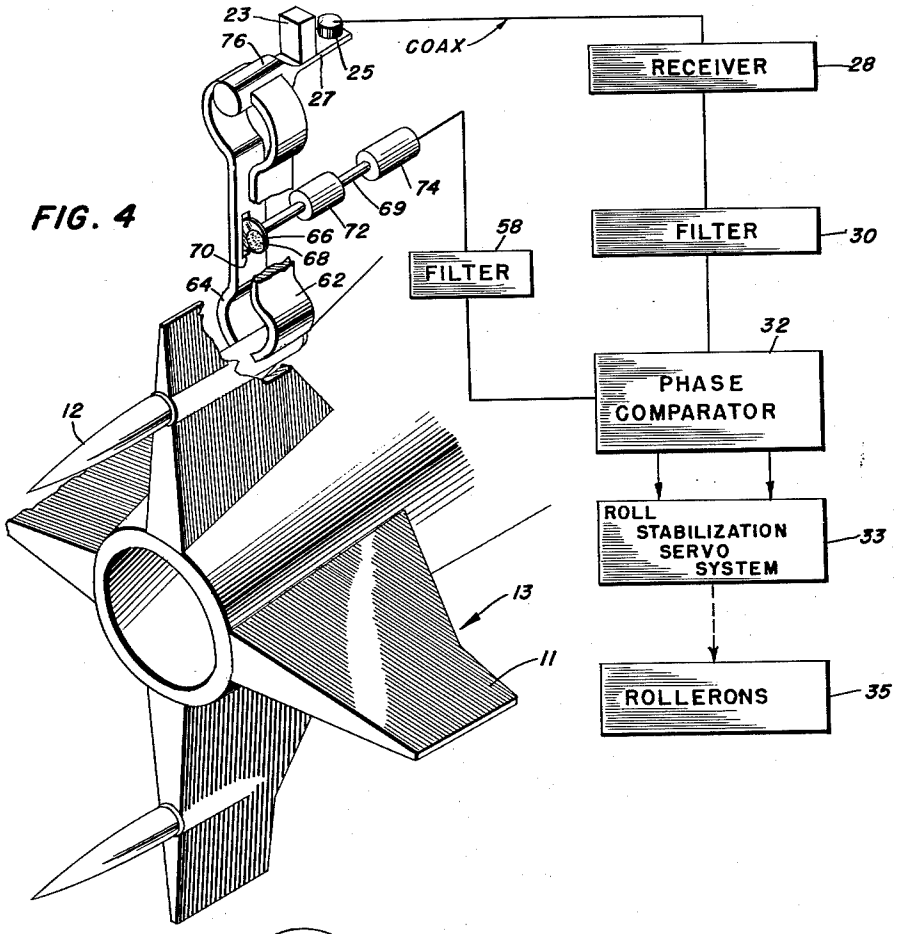

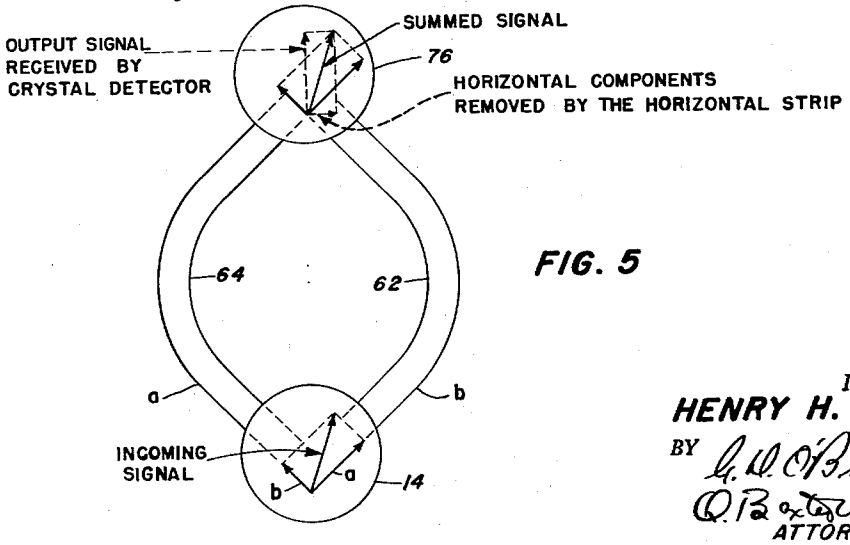

FIG. 5

INVENTOR.
HENRY H. GEORGE
BY G. W. O'Brien
Baxter Warner
ATTORNEYS

Aug. 22, 1961 H. H. GEORGE 2,997,255

MICROWAVE MODULATING ATTENUATOR ROLL STABILIZATION SYSTEM

Filed Jan. 14, 1955 3 Sheets-Sheet 3

FIG. 9

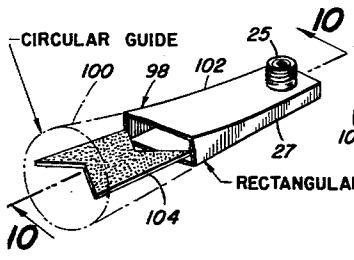

FIG. 10

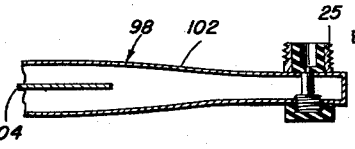

FIG. 11

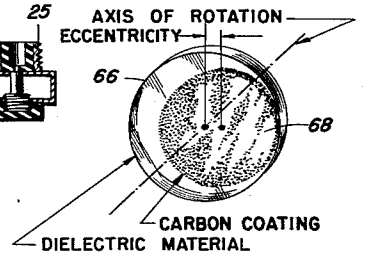

FIG. 7

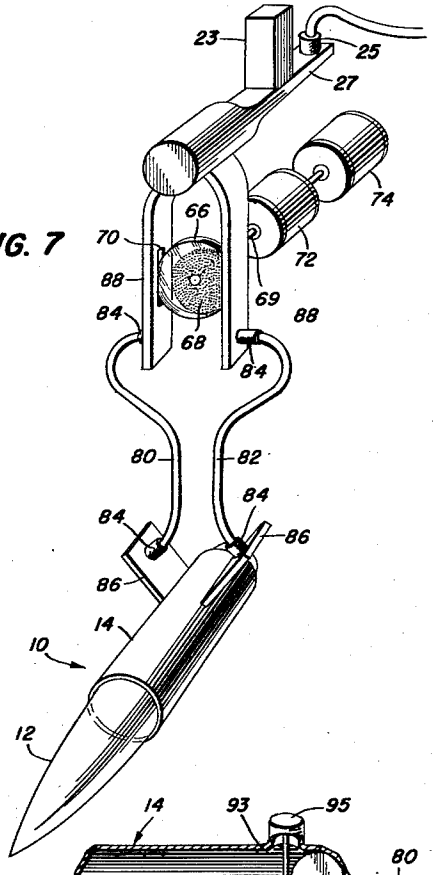

FIG. 8

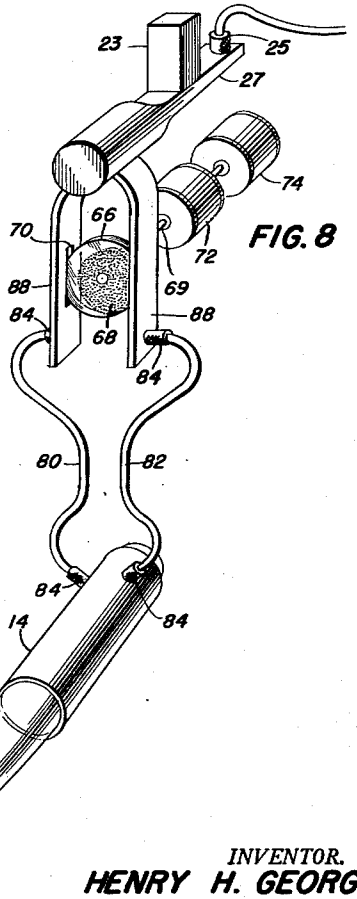

FIG. 6

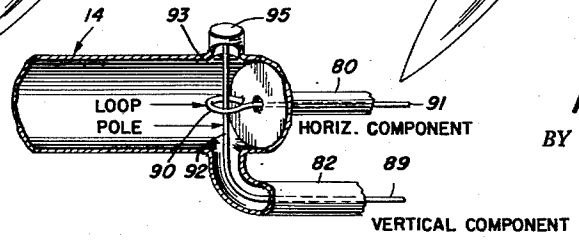

INVENTOR.
HENRY H. GEORGE
BY
ATTORNEYS

United States Patent Office 2,997,255 Patented Aug. 22, 1961

2,997,255

MICROWAVE MODULATING ATTENUATOR ROLL STABILIZATION SYSTEM

Henry H. George, Silver Spring, Md., assignor to the United States of America as represented by the Secretary of the Navy

Filed Jan. 14, 1955, Ser. No. 481,978
9 Claims. (Cl. 244—14)

This invention pertains generally to a stabilization system for an aerial missile, and more particularly to a roll stabilization system for a guided aerial missile which utilizes the vertical polarization of the received X-band radiation as a reference for stabilizing the missile while in aerial flight to a target.

One of the objects of this invention is to provide a system for roll stabilizing a beam riding guided missile which utilizes the vertical polarization of the received X-band radiation of the guidance beam as a reference axis.

Another object of this invention is to provide a roll stabilization system for a guided missile which utilizes a microwave modulating attenuator.

To provide an improved roll stabilization system for an aerial missile which is simple and reliable in operation, compact, and economical to manufacture, are other objects of the invention.

Other objects and many of the attendant advantages of this invention will be readily appreciated as the same becomes better understood by reference to the following detailed description when considered in connection with the accompanying drawings, and in which:

FIG. 1 is a perspective view, partly in schematic, illustrating one embodiment of the invention;

FIG. 2 is a perspective view illustrating a second embodiment of the invention;

FIG. 3 is a graph of the characteristics of the attenuator tube;

FIG. 4 is a perspective view, partly in schematic, of a roll stabilization system, incorporating the embodiment of the invention illustrated in FIG. 2;

FIG. 5 is a vector diagram representative of the input and output signals for the embodiments of the invention illustrated in FIGS. 2, 7, and 8;

FIG. 6 is a perspective, partly in cross section, of a modification of the embodiments of the invention illustrated in FIGS. 7 and 8;

FIG. 7 is a perspective view of still another embodiment of the invention;

FIG. 8 is a perspective view of still another embodiment of the invention;

FIG. 9 is an enlarged perspective view of a detail of the embodiments of the invention illustrated in FIGS. 2, 4, 7, and 8;

FIG. 10 is a section taken along line 10—10 of FIG. 9; and

FIG. 11 is an enlarged view of a detail of FIGS 2, 4, 7, and 8.

In accordance with the invention, there is provided a roll stabilization system for a guided aerial missile. This system comprises means including a non-polarized antenna system having a waveguide, an attenuator means connected with the waveguide at points 90° apart, a receiver having a mixer, means for summing the outputs of the attenuator and for feeding the resultant signal to the receiver mixer, means connected with the receiver and the attenuator means for developing a roll error voltage, and means utilizing the roll error voltage to provide for roll stabilization of the missile which is caused to travel along a beam of electromagnetic energy projecting from a radar transmitter and illuminating a target.

More particularly, the electromagnetic energy is

received by a non-polarized antenna system having two couplings to two rectangular waveguides which are oriented 90° apart on a 45° plane. Each waveguide feeds the gas tubes of the attenuator, with the outputs therefrom being summed together in a magic tee coupled to the microwave mixer of a receiver.

The gas tubes of the attenuator have the characteristic of approximate linear attenuation to the log of the power versus bias current. A sinusoidal voltage may be applied with the bias voltage supply. This results in an average attenuation being varied sinusoidally in accordance with the applied voltage. In the circuit, the attenuator tubes are adjusted for equal average attenuation, and they are modulated equally by the applied sinusoidal signal but are 180° difference in phase.

A modification of the above roll stabilization system is also provided to eliminate the critical attenuator gas tubes. The modified system is more adaptable to the geometry of the aerial missile. Several embodiments of the modified system are provided.

In one of the embodiments of the modified system, the nonpolarized antenna and coupling arms are mounted on the wing tips. The two coaxial legs are coupled to two waveguides which are placed adjacent to each other. Each waveguide has a slit in the adjacent face thereof so that an eccentrically rotated attenuator disk dips into one of the waveguides as it is lifted out of the other waveguide. The result is that each waveguide is modulated at the rotation rate of the disk but 180° out of phase. A motor drives the disk and a rate generator to provide the reference signal for the phase sensitive rectifier as in the previous system.

Referring now to FIG. 1 of the drawings, there is illustrated a roll stabilization system for a beam riding guided missile which utilizes the vertical polarization of the received X-band radiation of the guidance beam as a reference axis for roll stabilizing a missile while in aerial flight. Energy from a guidance beam is received by a non-polarized antenna system **10** comprising a conical dielectric lens portion **12** and a cylindrical waveguide section **14**. The antenna systems may be mounted in a wing tip **11** of a missile **13** such as illustrated in FIG. 4. It is to be noted that in this figure the antenna system has been removed from the wing tip **11** in order to better illustrate its particular features. The waveguide section **14** is coupled to two rectangular waveguides **16** and **18** oriented 90° apart on 45° planes. Waveguides **16** and **18** feed attenuator gas tubes **20** and **22**, respectively. The modulated signal outputs from these tubes **20** and **22** are then passed through the wave guides **16** and **18** to a magic tee **24** where the signal outputs are summed together. The magic tee **24** is coupled to a mixer **26** comprising a local oscillator **23**, a crystal detector **25**, and a waveguide section **27** of a missile receiver **28**. The roll signal output from the missile receiver **28** is separated from the guidance signal by a filter **30** and then is passed to a phase comparator **32**.

The attenuator tubes **20** and **22** are connected by leads **36** and **38** to two resistors **40** and **42**, which, in turn, are connected through capacitors **44** and **46** to the secondary coil windings **48** of the audio-transformer **34**. The center tap of the secondary winding **48** is grounded at **49**. A bias voltage is applied between the resistors **40** and **42** from a bias voltage source **50**. One side of the primary coil windings **52** of the audio-transformer **34** is connected to ground at **54**, while the other side of the windings **52** is connected to an audio-oscillator **56**, and the latter, in turn, is connected through a filter **58** to the phase comparator **32**.

The attenuator gas tubes **20** and **22** have the characteristic of approximate linear attenuator to the log of the power versus bias current, as illustrated in FIG. 2. In

the system a sinusoidal voltage may be applied with the bias voltage source **50**. This results in an average attenuation being varied sinusoidally in accordance with the applied voltage. In the circuit of FIG. 1, the attenuator tubes **20** and **22** have equal average attenuation and are modulated equally by the applied sine wave signal by oscillator **56** but are 180° different in phase.

Thus, for equal signals in power fed into the waveguides **16** and **18**, as would be the case for the vertical axis of the aerial missile coinciding with the vertical plane of polarization of the guidance beam, no modulation appears on the signal at the receiver mixer **26** because the amount of signal increase caused by a decrease of attenuation in tube **20** is balanced by a decrease in signal by an increase in attenuation of the tube **22**. Likewise, if more energy is fed in the waveguide **16**, then modulation will appear on the signal at the receiver mixer **26** of the phase of the A.C. signal applied to the attenuator tube **20**. On the other hand, if more energy is fed to the waveguide **18** than to the waveguide **16**, the modulation of the signal at the mixer will be 180° different in phase from that applied to the attenuator tube **22**. The receiver **28** operates on this signal to derive a demodulated signal at the output of the receiver **28**.

In this application, for zero degrees roll condition of the aerial missile, the vertical polarized signal from the missile guidance beam enters the non-polarized section **12** of the antenna **10**. As previously indicated, since each waveguide **16** and **18** is arranged at a 45° angle, each waveguide receives one-half of the power for zero roll condition of the missile.

However, when the missile rolls 45° clockwise, waveguide **18** receives all of the radio frequency energy and waveguide **16** receives zero radio frequency energy. The maximum A.C. voltage will appear on the receiver (**28**) output due to the modulation of the signal by attenuator tube **22**.

If the missile rolls 45° counterclockwise, the waveguide **16** will receive all of the radio frequency energy and the waveguide **18** will receive zero radio frequency energy, with the result that the maximum A.C. voltage appears on the receiver output due to the modulation of the signal by attenuator tube **20** and this modulation is 180° from that of the modulation of the 45° clockwise roll mentioned above. Hence, if the applied A.C. signal and the derived A.C. signal are phase sensitive rectified, a characteristic plot of D.C. volts output versus degrees roll either counterclockwise or clockwise would show a curve which passes through the origin and which is sinusoidal in shape.

Another embodiment of the waveguide system is shown in FIGS. 2 and 4 and other embodiments of waveguide systems are shown in FIGS. 7 and 8. This system of FIGS. 2 and 4 in performance is identical to the electrical system of FIGS. 1, 7 and 8, and these systems are utilized to eliminate the critical attenuator gas tubes **20** and **22**. These waveguide systems are more adaptable to the geometry of an aerial missile.

In the waveguide system of FIG. 2, as well as the waveguide systems shown in FIGS. 7 and 8, the antenna lens **12**, the circular waveguide **14**, the local oscillator **23**, the crystal detector **25**, and the waveguide section **27** of the mixer are identical to the same elements shown in FIG. 1.

In the waveguide system of FIG. 2, two waveguides **62** and **64** are located between the circular waveguide **14** and the waveguide **27** of the mixer **26**. These waveguides **62** and **64** are joined to the circular waveguide **14** at a 45° angle to the vertical and are spaced 90° apart. The upper ends of the waveguides are joined to a circular waveguide **76** at a 45° angle to the vertical and are also spaced 90° apart. The center sections of the waveguides **62** and **64** are arranged parallel to each other.

Between the center sections of the waveguides **62** and **64**, there is located a disk **66** of dielectric material which enters a vertical slot **70** in each waveguide **62** and **64**, with the slot **70** of waveguide **64** being shown. This disk is shown in detail in FIG. 11 and will be discussed more subsequently. This disk **66** has eccentrically located thereon a circular coating **68** of carbon. The disk **66** is mounted for rotation on the end of a shaft **69**, which is a common shaft for a motor **72** and a reference generator **74**, which drive the shaft **69**. The circular waveguide **76** is transformed to the rectangular waveguide **27**, as best illustrated in FIGS. 9 and 10. This will be discussed more subsequently.

In FIGS. 7 and 8 variations of the waveguide system of FIGS. 2 and 4 are shown which incorporate the flexibility and smaller size of the microwave coaxial cables **80** and **82** for mechanical simplicity. These cables **80** and **82** are terminated by coax to waveguide terminals **84** which are mounted on the waveguides **86** and **88**, in FIG. 7 and by coax to waveguide terminals **84** which are mounted on the waveguides **88** and directly on the cylindrical waveguide **14** as shown in FIG. 8. Otherwise, the performance and method of modulation for this waveguide system is identical to that previously described in FIGS. 2 and 4.

In FIGS. 6 there is illustrated another method for deriving the two 90° separated components of microwave signal in the circular waveguide **14**, as illustrated in FIGS. 1, 2, 4, 7 and 8.

In the modification of the waveguide **14**, shown in FIG. 6, the center conductor **91** of the coaxial cable **80** is terminated by a loop **90**, while the center conductor **89** of the coaxial cable **82** is terminated by a pole **92** which passes through the loop **90** and has its end **93** fixed to a matching stub **95**. The loop **90** absorbs the horizontal component of the microwave signal from the waveguide **14**, while the pole **92** absorbs the vertical component of the microwave signal from the waveguide **14**. The components are then transmitted by the coaxial cables **80** and **82** to the rectangular waveguides, such as **88**.

In FIGS. 9 and 10, there is illustrated the apparatus for attenuating the undesired horizontal component of the signal applied to the vertically polarized mixer crystal detector **24**. The absence of this attenuation would allow the horizontal component of the microwave energy signal to be reflected back into the wave guide system to cause abnormal performance that would otherwise result in an incorrect reading of roll angle of the missile.

In FIGS. 9 and 10, there is shown the transition of the waveguide **98**, from a circular section **100** to a rectangular waveguide section **102**. An attenuating material **104**, such as a carbon coated dielectric, is mounted in the horizontal plane of the waveguide **98**. This material **104** attenuates the undesired microwave signal, as previously mentioned.

FIG. 11 shows the modulator disk **66** used in the waveguide systems of FIGS. 2, 4, 7 and 8. This circular disk **66** is formed of dielectric material so that rotation about its center does not result in phase modulation of the microwave signals. The circular coating **68**, previously mentioned is fastened to the surface of this disk **66**. This coating consists of a microwave attenuating carbon material whose center is displaced from the center of the dielectric disk **66**. Therefore, rotation of the dielectric disk **66** results in eccentric motion of the carbon material **68**.

In FIG. 2 for zero roll angle error the signal from the antenna **12** is divided equally in waveguides **62** and **64**. As the carbon material **68** dips into the waveguide slot **70** of waveguide **62**, it attenuates the microwave energy in that waveguide while, at the same time, the carbon material **68** is being removed from the slot **70** of waveguide **64** to decrease the attenuation, and, hence, to increase the signal in that waveguide. When the disk **66** is rotated by the motor **72**, this results in sinusoidal amplitude modulation of the signal in waveguide **62**, that is, equal but 180° phase difference to the amplitude modulation of the signal in waveguide **64**.

Each rotation of the disk **66** results in one cycle of sinusoidal amplitude modulation of the signals so the frequency of the modulation is the same as the revolutions per second of the motor **72**. The modulated signals of waveguides **62** and **64** are summed together in the circular waveguide **76**. Hence, for all practical purposes, these two equally modulated 180° out of phase signals are added together and result in zero roll error amplitude modulation of the signal applied to the mixer **26**. Phase sensitive rectification of the output signal of the receiver **28**, therefore, produces zero D.C. roll error voltage.

For a 45° clockwise roll error, all the microwave energy from the antenna **12** enters waveguide **64** and it is amplitude modulated by the disk **66**. This energy is then passed by the circular waveguide **76** to the mixer **26**. The amplitude modulation is demodulated by the receiver **28** to provide an A.C. roll error voltage that is passed by the filter **30** to the phase sensitive rectifier or comparator **32**. The reference voltage for the phase comparator **32** is obtained from the A.C. generator **74**, which is coupled by the shaft **69** to the motor **72**. The output signal of the phase comparator **32** is a maximum D.C. voltage signal which may, for this case, be positive in polarity.

For a 45° counter-clockwise roll error, all the energy passes down waveguide **62** to be amplitude modulated 180° phase difference from the condition mentioned in the previous paragraph. The demodulated and phase sensitive rectified signal is then a maximum negative voltage signal for this case.

FIG. 5 illustrates vectorially the separation of the two 90° components of the microwave signal in the circular waveguide **14**, and their resummation in the circular waveguide **76** with this vertical component received by the crystal detector **25**. The horizontal component absorbed by the attenuator of FIG. 9 is also illustrated here.

Obviously many modifications and variations of the present invention are possible in the light of the above teachings. It is therefore to be understood that within the scope of the appended claims the invention may be practiced otherwise than as specifically described.

What is claimed is:

1. In combination, an aerial missile, a guidance system for the missile by which said missile is caused to travel along a vertically polarized beam of electromagnetic energy projected from a radar transmitter and illuminating a target, and a roll stabilization system for roll-stabilizing said missile in said beam, said roll stabilization system comprising a non-polarized antenna means including at least two waveguides located substantially ninety degrees apart for receiving the electromagnetic energy from said beam, attenuator means coupled to each waveguide, a receiver having a mixer, means for summing together the output signals of said attenuator means and for feeding the resulting signal to the mixer of said receiver, means electrically connected to said receiver and said attenuator means for developing a roll error voltage signal, and means utilizing said roll error voltage signal to provide a control signal for roll stabilization of said missile.

2. In combination, an aerial missile, a guidance system for the missile by which said missile is caused to travel along a vertically polarized beam of electromagnetic energy projected from a radar transmitter and illuminating a target, and a roll stabilization system for roll-stabilizing said missile in said beam, said roll stabilization system comprising non-polarized antenna means including at least two waveguides located substantially ninety degrees apart, an attenuator tube coupled to each waveguide, a receiver having a mixer, means for summing together the output signals of said attenuator tubes and for feeding the resulting signal to the mixer of said receiver, means electrically connected to said receiver and said attenuator means for developing a roll error voltage signal, and means utilizing said roll error voltage signal to provide a control signal for roll stabilization of said missile.

3. In combination, an aerial missile, a guidance system for the missile by which said missile is caused to travel along a vertically polarized beam of electromagnetic energy projected from a radar transmitter and illuminating a target, and a roll stabilization system for roll-stabilizing said missile in said beam, said roll stabilization system comprising non-polarized antenna means, including at least two waveguides located substantially ninety degrees apart, attenuator means including a rotating disk having an attenuating material eccentrically mounted thereon and coupled to said waveguides, a receiver having a mixer, means for summing together the output signals of the attenuator means and for feeding the resulting signal to the mixer of said receiver, means electrically connected to said receiver and said attenuator means for developing a roll error voltage signal, and means utilizing said roll error voltage signal to provide a control signal for roll stabilization of said missile.

4. A roll stabilization system for roll-stabilizing an aerial missile in a vertically polarized guidance beam of electromagnetic energy projected from a radar transmitter and illuminating an aerial taregt, said system comprising non-polarized antenna means including at least two waveguides located substantially ninety degrees apart, attenuator means coupled to each of said waveguides, a receiver having a mixer, means for summing together the output signals of said attenuator means and for feeding the resulting signal to the mixer of said receiver, means electrically connected to said receiver and said attenuator means for developing a roll error voltage signal, and means utilizing said roll error voltage signal to provide a control signal for roll stabilization of said missile by operating a servo system, which, in turn, controls aerodynamic surfaces of said missile.

5. A roll stabilization system for roll-stabilizing an aerial missile in a vertically polarized guidance beam of electromagnetic energy projected from a radar transmitter and illuminating an aerial target, said system comprising non-polarized antenna means including at least two waveguides located substantially ninety degrees apart, an attenuator tube coupled to each of said waveguides, a receiver having a mixer, means for summing together the output signals of said attenuator tubes together and for feeding the resulting signal to the mixer of said receiver, means electrically connected to said receiver and said attenuator means for developing a roll error voltage signal, and means utilizing said roll error voltage signal to provide a control signal for roll stabilization of said missile.

6. A roll stabilization system for roll-stabilizing an aerial missile in a vertically polarized guidance beam of electromagnetic energy projected from a radar transmitter and illuminating an aerial target, said system comprising non-polarized antenna means including at least two waveguides located substantially ninety degrees apart, means including a rotating disk having an attenuating material eccentrically mounted thereon and coupled to each of said waveguides, a receiver having a mixer, means for summing together the output signals of said attenuating means and for feeding the resulting signal to the mixer of said receiver, means electrically connected to said receiver and said attenuator means for developing a roll error voltage signal, and means utilizing said roll error voltage signal to provide a control signal for roll stabilization of said missile by operating a servo system, which, in turn, controls aerodynamic surfaces of said missile.

7. A roll stabilization system for roll-stabilizing an aerial missile in a vertically polarized guidance beam of electromagnetic energy projected from a radar transmitter and illuminating an aerial target, said system comprising non-polarized antenna means including at least

two waveguides located substantially ninety degrees apart, attenuator means coupled to each of said waveguides, a receiver having a mixer, means for summing together the output signals of said attenuator means and for feeding the resulting signal to the mixer of said receiver, means electrically connected to said receiver and said attenuator means for developing a roll error voltage signal, means for utilizing said roll error voltage signal to provide a control signal, and means for utilizing said control signal to roll stabilize said missile.

8. A roll stabilization system for roll-stabilizing an aerial missile in a vertically polarized guidance beam of electromagnetic energy projected from a radar transmitter and illuminating an aerial target, said system comprising non-polarized antenna means including at least two waveguides located substantially ninety degrees apart, attenuator means coupled to each of said waveguides, a receiver having a mixer, means for summing together the output signals of said attenuator means and for feeding the resulting signal to the mixer of said receiver, means electrically connected to said receiver and said attenuator means for developing a roll error voltage signal, means for utilizing said roll error voltage signal to provide a control signal, and means including a servo system for utilizing said control signal to roll stabilize said missile by controlling aerodynamic surfaces of said missile.

9. In combination with an aerial missile having an aerodynamic surface, a roll stabilization system for roll-stabilizing said aerial missile in a vertically polarized guidance beam of electromagnetic energy projected from a radar transmitter and illuminating an aerial target, said system comprising non-polarized antenna means including at least two waveguides located substantially ninety degrees apart, attenuator means coupled to each of said waveguides, a receiver having a mixer, means for summing together the output signals of said attenuator means and for feeding the resulting signal to the mixer of said receiver, means electrically connected to said receiver and said attenuator means for developing a roll error voltage signal, means for utilizing said roll error voltage signal to provide a control signal, and means including a servo system for utilizing said control signal to roll stabilize said missile by controlling said aerodynamic surface of said missile.

References Cited in the file of this patent

UNITED STATES PATENTS

2,362,832 Land ---------- Nov. 14, 1944