April 24, 1928.

1,667,705

K. VON WYSIECKI

SELF INDUCTION COIL

Filed Nov. 28, 1925

Fig. 1.

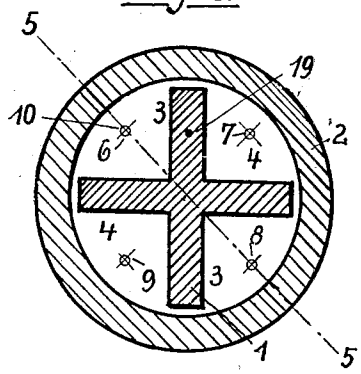

Fig. 2.

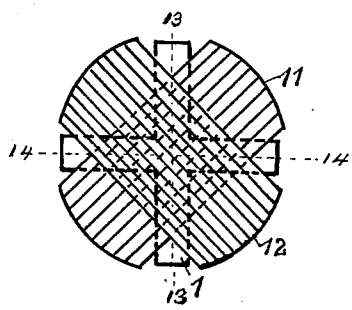

Fig. 3.

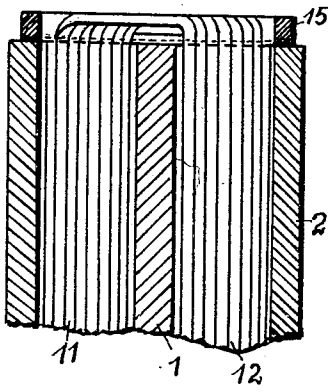

Fig. 4.

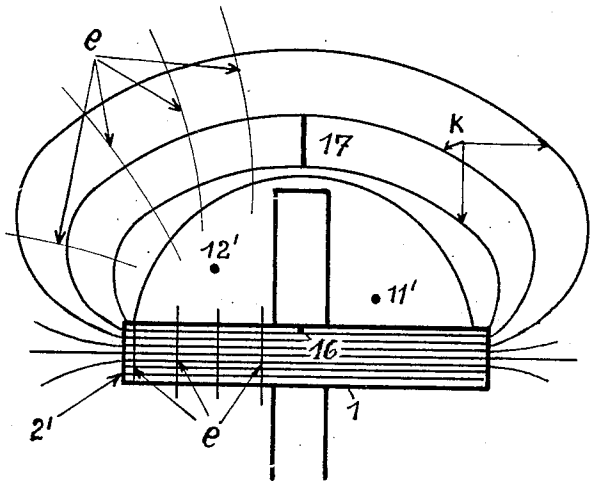

Inventor:
Kurt von Wysiecki,
by Banks & Anderson
Atty.

Patented Apr. 24, 1928. 1,667,705

UNITED STATES PATENT OFFICE.

KURT VON WYSIECKI, OF LAUSANNE, SWITZERLAND.

SELF-INDUCTION COIL.

Application filed November 28, 1925, Serial No. 71,994, and in Germany August 18, 1924.

My invention relates to a self induction coil serving for loading or pupinizing line circuits, the coil having an inner iron core and an outer iron casing. A constructional embodiment of my invention for loading double line circuits may be obtained, for instance, by arranging the windings for the forward and return or primary and secondary conductors with crossed planes of winding upon a cruciform iron core the longitudinal windings being in the sectors of the core, and such windings being surrounded by a cylindrical casing.

In the accompanying drawings which illustrate the preferred form of my invention,—

Figure 1 is a transverse section of a loading coil without the windings;

Figure 2 is a plan view of the core and windings, showing the same without the casing;

Figure 3 illustrates a vertical longitudinal section of an end portion of the core, windings and the casing;

Figure 4 is a vector diagram which shows schematically the magnetic flux.

In the accompanying drawings, 1 refers to a cruciform or cross-shaped core, the arms thereof extending at right angles, and 2 refers to a cylindrical outer casing, the internal diameter of the casing being in excess of the length of the arms of the core. The primary and secondary windings 11 and 12 lie in the sector shaped spaces 3 and 4 formed by the arms and the casing and cross the ends of the core, as shown by Figs. 2 and 3 so that one winding will lie in two sectors or segmentally shaped spaces 3 and the other winding in the two sectors or segmental spaces 4, which spaces are between the arms of the cruciform core.

The placing of the windings in the sectors or spaces between the arms of the core give rise to certain symmetrical properties which are due to the fact that the number of turns increases approximately proportionally to the increasing radial distance from the centre of the core, as does also their average magnetic-motive action on the arm of the cross. This will be understood without further explanation, if one imagines that the action of each layer of wire is replaced by a single wire lying, for example, on the line 5—5, through which a current of n-times strength passes, where n is the number of wires in a layer in the spaces between the arms of the core. The power vector of the symbol n increases in proportion to the radial distance from the centre, as does also the perpendicular distance of the corresponding wire on the line 5—5 from the arms of the cross on the two sides of the sector. The magneto-motive force in the cross is therefore of the same magnitude from point to point. Consequently no stray lines of magnetic force can occur, and this results in the favourable electrical properties of the individual coil or windings between opposite arms.

A similar consideration has been undertaken also for the outer casing, namely with respect to the individual sectors, on the supposition that the magnetic fields when separately considered are simply superimposed. However, this undesirable property, namely that adjacent coils strongly interact and it appears that when many coils were assembled in a box, where it was necessary to fix the coils in quite definite positions with respect to one another so that the resulting magnetic fields of the coils were at right angles and did not therefore disturb one another. This was a very difficult work and further some uncertainty and danger of mutual disturbance always remained.

According to my invention, it follows that for establishing the relative sizes of the magnetic flux on the one hand in the cross and on the other hand in the casing that the wires in the individual sectors must not be taken into account, the total effect of all four sectors, as this total effect on the cruciform core is quite different from that on the casing. This can easily be illustrated if one imagines that the total effect produced by the wires in each sector is replaced, by a single wire placed as it were in the electromagnetic centre through which a flux of m-fold strength passes, m representing the number of wires in the sector, as for instance, in Fig. 1 the points 6, 7, 8, 9 represent these imaginary wires. It can be seen that at the point 19 in the core is a summation of total or aggregate effect of the imaginary wires, for example, at the point 10 in the casing the vector or force effect of 6 and 8 is opposite in direction. The cruciform core and cylindrical casing in accordance with my invention are of such dimensions with respect to one another that the magnetic resistance of the cross-shaped core is to that of the cylindrical casing the unit

length in the direction of the lines of force, approximately as the resulting magnetic force of the four bundles of wires in the sectors between casing and core. This mutual conformity can, when the casing and cross are made of the same material, be effected by suitable measurements of their cross-section. It is more advantageous however, to regard the size and weight of the coil and to employ magnetic bodies with different permeability for the tubular casing and core, in which case the permeability of the casing is as high as possible and that of the cross-shaped core is lower.

The working principle of the new self induction coil becomes more clear in detail from the magnetic vector diagram or figure shown in Fig. 4. Wherein an electric current passes through the crossed windings 11, 12 shown in Figs. 2 and 3, and if these windings 11, 12 are surrounded only by air as by removing the iron core 1 and the casing 2 there will be formed in a middle cross-section a magnetic field of lines of force according to Fig. 4 in which 11′ and 12′ indicate schematically the cross section of the one half of the crossed winding, *e* being the potential lines and *k* the magnetic tubes of force. 2′ refers to the inner hollow space of the casing serving for receiving the iron core 1. It is to be noted that, in consequence of the particular symmetrical properties of the cross winding, a magnetic field exists in the second arm of the core 1 only when the direction of the electric current is reversed in the one part of the winding, and this is the case, when pupinizing or loading the combined line circuits by means of such coils, for the current in the phantom circuit in respect to the current of the basic circuit. By considering the action only of one direction of current, a magnetic figure or diagram as shown in Fig. 4 is obtained.

As it is clear from Fig. 4, a considerably stronger resulting magnetic flux exists in the core than in the outer environs of the winding, because a summation of the magnetomotive vectors of the four bundles of wires in the sectors 3 and 4—see Fig. 1—takes place in the inner space of the coil, whilst in the outer environs of the coil a subtraction of these magnetomotive vectors occurs. Consequently, the magnetic flux is higher or compressed in the interior of the core, and is enabled to expand freely on the outside. In the vector diagram Fig. 4 the first tube of force *k* on the outside of the winding in the point 17 has, for instance, approximately the same cross-section as the eight tubes of force in the inner space 16 of the winding.

If iron bodies of the same permeability are employed for core and casing and if the casing has a form corresponding to the tube of force with the maximum cross-section 17, the outer casing will receive in itself, as it becomes clear from Fig. 4, only about a quarter of all the lines of force leaving the core. Such a coil will be, therefore, absolutely useless, because it has very great electrical losses in consequence of this stray, and furthermore such coils will mutually interact even when situated at a very large distant one from the other.

Fig. 1 shows that when constructing such a cross winding it is inevitable to provide air gaps between the casing and the four ends of the inner core and these air gaps due to the construction reduce to a certain extent the stray fluxes of the coil as heretofore noted, but do not completely avoid the same.

According to my invention these disturbances are completely and perfectly avoided. For the magnetic fluxes in the core and casing, it is to have in mind that the magnetic flux flow on both sides of the coil around the winding, so that the total flux leaving the core is divided in two portions.

By providing a casing having a cross-section equal to that of the magnetic tube of force at the point 17, Fig. 4, where the magnetomotive vector is, for instance, eight times smaller than in the inner space 16 of the coil, the magnetic resistance of the casing should be about four times smaller than the magnetic resistance of the core.

In the case of this example, the coil will be provided with a casing and a core of different material as to permeability the casing having a permeability about four times higher than that of the core. Then, the air gap between core and casing can be considerably smaller and serves in a certain manner only for exactly and sensibly adjusting the magnetic resistances of the casing and the core in conformity with the vectors of E. M. F. prevailing at that place.

When providing a large air gap between core and casing and making the core and the casing of the same material, a favourable result can be obtained by conforming the cross-section of the casing in a suitable manner to the magnetic resistance of the cross-shaped core including the air gap. In this way it is possible, as the practice has proved, to avoid the inconvenience of the cross-talk incident to the Pupin coils as previously constructed.

From the foregoing it will be noted that only the portions of each winding lying between the spaces of the cruciform core have received consideration, but not the connecting parts of each winding which pass above and below the core. These wires are a further cause of the above mentioned disturbance of neighboring coils. The upper wires of the two crossing windings are illustrated diagrammatically in plan by Fig. 2. The one winding is represented by the lines 11 and the other by the lines 12. A resultant

magnetic flux according to the direction of flow of electric current in each is produced in the direction of the axes 13—13 and 14—14 shown on Fig 2. This flux passes between the cross arms and the windings out of the interior of the coil and is collected according to my invention, as shown in Fig. 3, by an extension 15 of the casing 2 at each end of the casing. The ring-shaped extension 15 must however also conform exactly to the conditions in respect of its magnetic susceptibility so that the density of the lines of force in it, when it is taking up all the stray lines of force of the end wires, is the same as the density of the lines of force in the casing. If this be not the case, lines of force overflow from the core and casing into it which gives rise to a considerable increase in the resistance losses of the coil. The adjustment may be facilitated by insulating the extension from the remainder of the casing by means of an intermediate layer of non-magnetic material.

By means of the precautions in accordance with the invention the result is obtained that not only are the above mentioned constructional difficulties and disturbances entirely avoided, but the electrical properties of the coil also are considerably more favourable, especially the dependency of the losses on the strength of current and frequency. Furthermore the principle of my invention can be employed not only in the case of coils having a cruciform iron core but also for coils the iron core of which is not cruciform, the principle consisting in that the stray lines are drawn into the casing by conforming the magnetic resistance of core and casing to the power flux produced by the windings in longitudinal spaces between the arms of the core.

I claim:

1. A loading coil comprising a core of ferromagnetic material having a shape which is elongated and cruciform in cross section, a casing of ferromagnetic material surrounding the core, windings crossing each other at right angles on the ends of the core and passing through opposite sectors formed by the arms of the core and by the casing, the magnetic resistances of core and casing being proportional to the power flux produced by the windings at the places of core and casing.

2. A loading coil comprising an inner core of ferromagnetic material having a shape which is elongated and cruciform in cross section, a casing of ferromagnetic material surrounding the core, windings crossing each other at right angles on the ends of the core and passing through opposite sectors formed by the arms of the core and by the casing, the magnetic resistances of these bodies being adapted proportionally to the power vectors produced by the windings in air alone at the places of core and casing when core and casing being omitted.

3. A loading coil comprising a core of ferromagnetic material having a shape which is elongated and cruciform in cross section, a casing of ferromagnetic material surrounding the core, windings crossing each other at right angles on the ends of the core and passing through opposite sectors formed by the arms of the core and by the casing, the magnetic resistances of core and casing being proportional to the power flux produced by the windings at the places of core and casing, the casing carrying at each end a ring-shaped extension insulated from the casing for taking up the power flux produced at the crossing of the windings.

4. A loading coil comprising an inner core of ferromagnetic material having a shape which is elongated and cruciform in cross section, a casing of ferromagnetic material surrounding the core, windings crossing each other at right angles on the ends of the core and passing through opposite sectors formed by the arms of the core and by the casing, the magnetic resistances of core and casing being made proportional to the flux vector produced by the windings at the places of core and casing by providing air gaps in the draught of the core.

5. A loading coil comprising an inner core of ferromagnetic material and of a shape elongated and cruciform in cross-section, a casing of ferromagnetic material surrounding the core and having an inner diameter greater than the length of the arms of the core, windings passing through the sectors between the arms of the core and the casing and crossing each other on the ends of the core, the magnetic resistances of core and casing being in proportion to the flux produced by the windings.

In testimony whereof I affix my signature.

KURT von WYSIECKI.