United States Patent [19]

Espenschied et al.

[11] **3,812,942**

[45] **May 28, 1974**

[54] **HYDRAULIC SYSTEM**

[75] Inventors: **Helmut Espenschied**, Ludwigsburg; **Herbert Weyer**, Stuttgart, both of Germany

[73] Assignee: **Robert Bosch G.m.b.H.**, Stuttgart, Germany

[22] Filed: **June 12, 1972**

[21] Appl. No.: **261,938**

[30] **Foreign Application Priority Data**

June 12, 1971 Germany 2129292

[52] **U.S. Cl.** ..... **192/91 R**, 74/583

[51] **Int. Cl.** **F16d 13/14**

[58] **Field of Search** ..... 60/54.5 R, 54.5 P, 54.6 P, 60/54.5 E, 54.5 S, 54.6 S, 62.5, 54.5 HA, 54.6 HA; 74/583; 192/91 R

[56] **References Cited**

UNITED STATES PATENTS

1,569,143	1/1926	Robinson	60/54.5 P
2,561,009	7/1951	Byers et al.	60/588
2,682,149	6/1954	Schwenk	60/54.6 S
2,759,584	8/1956	Brueder	192/91 R
3,140,586	7/1964	Joelson	60/62.5
3,347,043	10/1967	Greese	60/54.5 R
3,406,800	10/1968	Buchanan et al.	192/91 R
3,583,282	6/1971	Cope	60/54.5 R
3,633,365	1/1972	Belhnap	60/54.5 HA

FOREIGN PATENTS OR APPLICATIONS

1,125,777	1962	Germany	192/91 R

Primary Examiner—Edgar W. Geoghegan
Assistant Examiner—A. M. Zupcic
Attorney, Agent, or Firm—Michael S. Striker

[57] **ABSTRACT**

A hydraulic system for operating a friction clutch has a cylinder, in an internal passage of which a first piston is displaceable between a rest position and a working position against the action of a biasing element associated with the friction clutch, which action tends to move the first piston to its rest position. A second piston is also displaceable in the passage in the same sense as the first piston between a starting position and an operated position and defines with the first piston at all times a chamber. Pressure fluid is accommodated in this chamber at all times and the chamber communicates with a non-pressurized space via suitable passage means when the second piston is in its starting position.

6 Claims, 1 Drawing Figure

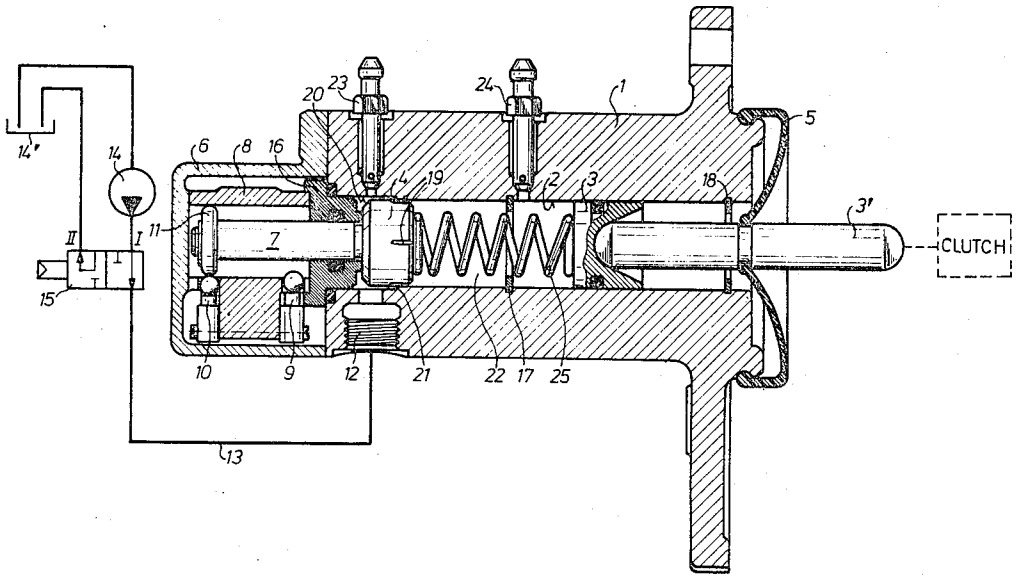

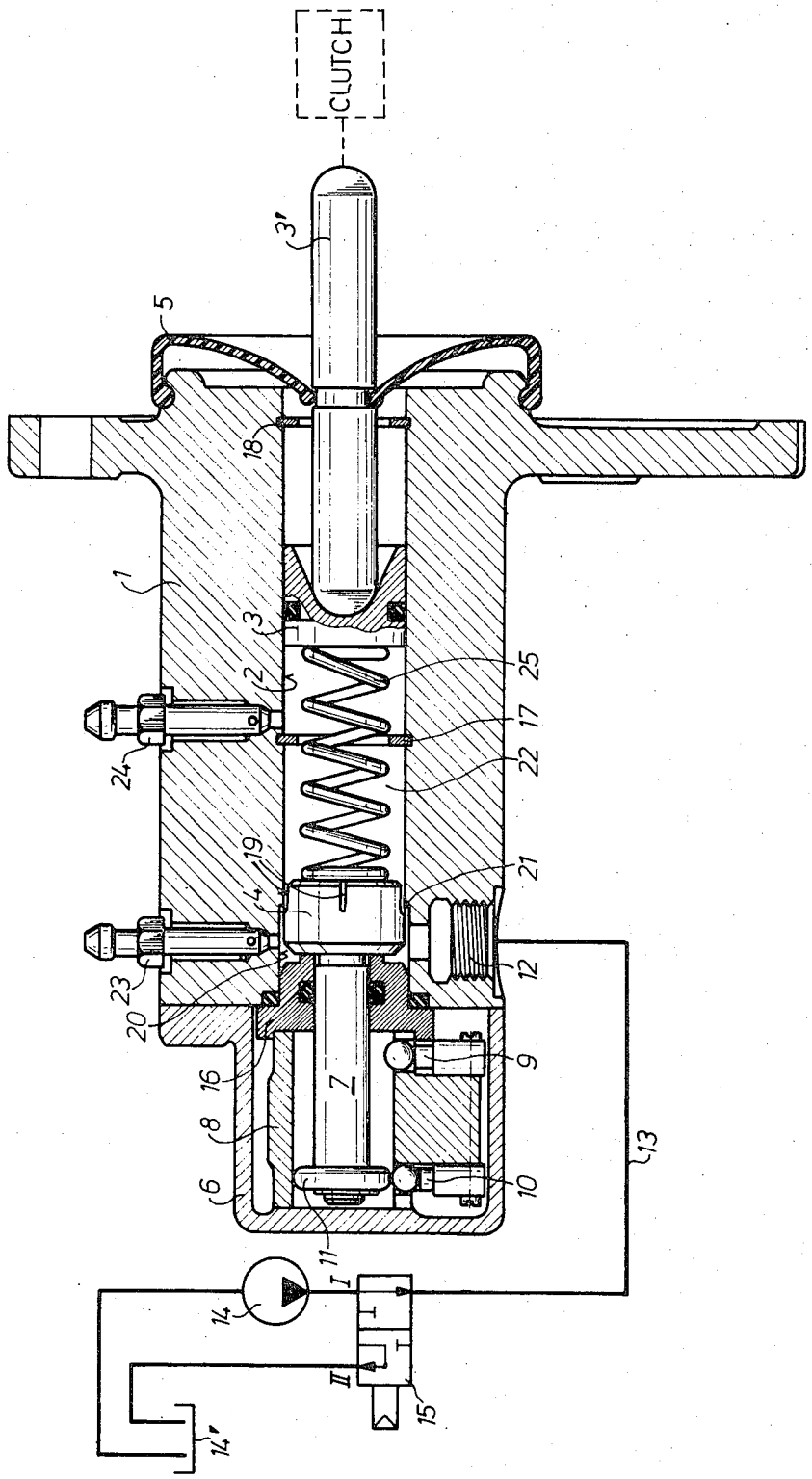
CLUTCH
3'
5
18
1
3
2
25
17
22
24
19
21
4
12
23
20
9
16
7
8
13
6
10
11
14
I
II
15
14'

HYDRAULIC SYSTEM

BACKGROUND OF THE INVENTION

The present invention relates generally to a hydraulic system and more particularly to a hydraulic system which is especially suitable for operating a friction clutch or the like.

The operation of friction clutches via a suitable hydraulic system is already known. Such systems utilize a cylinder and piston arrangmeent, and for details of what is known in this respect in the prior art reference may be had to German Pat. No. 1,450,211. The arrangement there disclosed is part of an automatically operating coupling arrangement or clutching arrangement for a motor vehicle.

It is important in such arrangements that the clutch point, that is the point of engagement or disengagement of the clutch, remain unchanged throughout the lifetime of the arrangement. If the clutch engaging point changes, then the coordination between the clutch operation and the engine speed of the vehicle is distured and leads to problems. Such a change in the clutch engaging point cannot be excluded in the prior art, and it is the result of wearing of the clutch plate or other components.

SUMMARY OF THE INVENTION

Accordingly, it is a general object of the invention to provide an improved arrangement of the type here under discussion which is not possessed of the disadvantage of the prior art.

More particularly, it is a general object of the invention to provide an improved hydraulic system which is capable of affording the aforementioned operation without being possessed of the outlined difficulties.

Still more particularly, it is an object of the present invention to provide an arrangement in a hydraulic system, which when utilized for operating a friction clutch assures that the clutch engaging point, that is the clutch engaging or disengaging point to be more precise, will not change, even when wear of the various components occurs, especially components of the clutch.

In pursuance of these objects, and of others which will become apparent hereinafter, one feature of the invention resides in a hydraulic system, particularly for operating a friction clutch, wherein a combination is provided comprising a cylinder having an internal passage, and a first and a second piston both located in this passage. The first piston is displaceable in the passage between a rest position and a working position against the action of a biasing force tending to return it to the rest position, and the second piston is also displaceable in the passage in the same sense as the first piston between a starting position and an operative position. The second piston defines with the first piston a chamber in the passage. Pressure fluid is accommodated in this chamber at all times, and passage means connects the chamber with a non-pressurized space when the second piston is in its starting position.

The novel features which are considered as characteristic for the invention are set forth in particular in the appended claims. The invention itself, however, both as to its construction and its method of operation, together with additional objects and advantages thereof, will be best understood from the following description of specific embodiments when read in connection with the accompanying drawings.

BRIEF DESCRIPTION OF THE DRAWING

The single FIGURE is a longitudinal section through an exemplary embodiment of the invention.

DESCRIPTION OF THE PREFERRED EMBODIMENTS

Discussing the FIGURE in detail, it will be seen that reference numeral **1** of the illustrated exemplary system identifies a cylinder which is provided with a central passage **2**, in which there are slidably accommodated two pistons **3** and **4**. The piston **3** is a first piston and the piston **4** is a second piston, and both of course are appropriately sealed in the passage and it will be seen that they are spaced from another to define with one another in the passage a chamber. A piston rod **3'** is provided on the first piston **3** and operates in non-illustrated and well known manner, either directly or indirectly via a linkage arrangement to the diagrammatically illustrated friction clutch which is identified with a legend.

One end of the passage **2** is closed with a seal **5**, the other end with a cover **6**. Piston **4**, that is the second piston, is provided with a projection **7** which extends into a unit **8** mounted on the cover **6** and serving for indicating the position of the piston **4**. The unit **8** is provided with two spaced electrical contacts **9** and **10** which are engaged and operated by a component **11** provided on the projection **7** when the piston **4** is in the appropriate position. The device or unit **8** is intended, when the electrical contacts **9** and **10** are operated either in a sense causing them to become engaged or to become disengaged, to supply a signal to a non-illustrated electronic control device to indicate to the latter whether the piston **4** is in its lefthand starting position or in its right-hand operative position, that is whether (in dependence upon these positions) the clutch is engaged or disengaged.

The passage **2** communicates with a bore **12** in the region of the unit **8**, and the bore **12** is in turn connected via the passage means or conduit **13** with a pump **14**. An electromagnetically operated control valve **15** of well known construction is interposed between the pump **14** and the bore **12** and depending upon whether the valve **15** is in the position I or the position II thereof, pressure fluid which is pumped by the pump **14** out of a non-pressurized space or reservoir **14'** will be pumped by the pump **14** either into the bore **12** and from there into the passage **2** or else will be returned by the pump **14** directly into the reservoir **14'**.

The passage **2** further contains an insert **16** against which the piston **4** abuts in its starting position, that is the position which is illustrated in the drawing. In its operative position the piston abuts against an abutment **17** which is provided in the passage **2**, for instance in form of a circlip which is snapped into an inner circumferential wall bounding the passage **2**. Another abutment **18** which may be of the same type as the abutment **17**, is provided in the passage **2** for the piston **3**, serving to prevent movement of the piston **3** out of the passage **2** when the piston **3** moves from its rest position to its working position.

The outer circumferential surface of the piston **4** is provided with a plurality of circumferentially spaced axially extending grooves **19** which extend over a portion of the axial length of the piston **4** as is clearly evi-

dent. The passage 2 is interiorly stepped in the region of its end adjacent the unit 8, having in this region a passage portion 20 whose diameter is slightly larger than that of the remainder of the passage, whereby a small shoulder 21 is provided. The space or chamber included between the pistons 3 and 4 is designated with reference numeral 22 and is filled at all times with pressure fluid.

With the piston 4 in the starting position shown in the drawing, the space 22 communicates via the grooves 19 with the portion 20 of the passage. The portion 20 as well as the chamber 22 are each provided with a venting arrangement 23 and 24, respectively, and biasing spring 25 is accommodated in the chamber 22 bearing upon both of the pistons 3 and 4.

If it is assumed that the diagrammatically illustrated clutch is in its engaged position when the arrangement is in the position illustrated in the drawing, and if the clutch is now to be disengaged, then the valve 15 is moved to its position I, permitting the pressure fluid supplied by the pump 14 to flow into the passage portion 20, resulting in displacement of the piston 4 toward the right in the drawing, that is towards its operative position. Shortly after the right-hand movement of the piston 4 has begun, the left-hand ends of the grooves 19 will pass towards the right past the shoulder 21, so that the connection between the chamber 22 and the passage portion 20 is interrupted. The pressure fluid which is permanently present in the chamber 22, especially because the reservoir 14′ is advantageously located at a higher level than the passage 2, is now entrapped in the chamber 22 and as the piston 4 continues to move to its operative position which it reaches when it engages the abutment 17, the pressure fluid effects a displacement by exactly the same distance of the piston 3 towards the right, that is towards the working position of piston 3. The concomitant displacement of the piston rod 3′ results in disengagement of the clutch.

If the valve 15 is moved to its position II, the pump 14 continuously circulates the pressure fluid from the reservoir 14′ back into the reservoir, and any pressure acting upon the piston 4 (from the previous pressure fluid to the same) disappears. The biasing force exerted by the clutch, that is by the clutch spring or springs tends to engage the latter again, and now displaces the piston 3 back to its rest position which need not be a position in which the piston 3 is in engagement with the abutment 17. The pressure fluid in the chamber 22 transmits this displacement to the piston 4, displacing the same towards the left until under cooperation of the spring 25 it engages the insert 16 and assumes its rest position. The spring 25 has the additional purpose of assuring that the piston 3 will engage the clutch without play via the piston rod 3′. Thus, the construction according to the present invention assures that both pistons 3 and 4 will always be in a precisely defined starting position.

As pointed out at the beginning of the specification, the components of the clutch are subject to wear, for instance the pressure plate of the clutch or the like. Because of this the return path of the piston 3 can become greater than it was originally. When this occurs, the construction according to the present invention makes it possible for the excess pressure fluid in the chamber 22 to escape via the grooves 19 of the piston 4 into the reservoir 14′, an escape which taks place during each clutching operation. It is therefore evident that the clutching point will always remain unchanged, despite wear on clutch components, and this is particularly important with clutches, particularly automatically operated clutches and avoids any necessity for adjusting of the clutch.

Moreover, it will be appreciated that even the indication of the clutch position which is provided by operation of the contacts 9 and 10 is not influenced by such wear so that such adjustment of these components is also not necessary.

The devices 23 and 24 are operated from time to time in order to permit escape of any air which may have become included in the pressure fluid.

It will be appreciated that the pistons 3 and 4 could be located in separate housings or cylinders if this is desired and that the connection between the chambers 22 and the reservoir 14′ (or, more usually with the conduit extending to the reservoir 14′) can also be achieved by a transverse bore located shortly ahead of the second piston 4.

It will be understood that each of the elements described above, or two or more together, may also find a useful application in other types of constructions differing from the types described above.

While the invention has been illustrated and described as embodied in a hydraulic system, it is not intended to be limited to the details shown, since various modifications and structural changes may be made without departing in any way from the spirit of the present invention.

Without further analysis, the foregoing will so fully reveal the gist of the present invention that others can, by applying current knowledge readily adapt it for various applications without omitting features that from the standpoint of prior art, fairly constitute essential characteristics of the generic or specific aspects of this invention and, therefore, such adaptations should and are intended to be comprehended within the meaning and range of equivalence of the following claims.

What is claimed as new and desired to be protected by Letters Patent is set forth in the appended claims.

We claim:

1. In a hydraulic system for operating a clutch, particularly a friction clutch, a combination comprising a reservoir for hydraulic fluid; cylinder means having an internal passage; a first piston displaceable in said passage between a working position in which said clutch is disengaged and a plurality of rest positions in any one of which said clutch is engaged; linkage means linking said first piston with said clutch and urging said first piston towards one of said rest positions; a second piston displaceable in said passage in the same sense as said first piston between an operative position which said second piston occupies when said clutch is disengaged and a predetermined starting position which said second piston approaches in response to movement of said first piston from said working position towards said rest positions and which said second piston occupies when said clutch is engaged, said first and second pistons together defining a chamber forming part of said passage, and said second piston cooperating with said cylinder means to establish communication between said reservoir and said chamber only when said second piston is in said starting position so that said chamber is completely filled with hydraulic fluid in said starting position of said second piston; biasing means inter-

posed between said first and second pistons to bear against said second piston and to return said second piston to said starting position in response to movement of said first piston from said working positions to any of said rest positions; and pump means for pumping hydraulic fluid from said reservoir to said passage so as to effect movement of said second piston from said starting position towards said operative position.

2. In a hydraulic system as defined in claim **10**; and further comprising control valve means interposed between said passage and said pump means, said valve means having a first position in which said pump means communicates with said passage, and a second position for preventing communication between said pump means and said passage.

3. In a hydraulic system as defined in claim **1**, said biasing means being spring means.

4. In a hydraulic system as defined in claim **1**; further comprising abutment means in said chamber for limiting the displacement of said pistons in said passage.

5. In a hydraulic system as defined in claim **1**; further comprising electrical contact means, and a projection on said second piston adapted to engage and operate said contact means when said second piston is in either of said positions thereof for providing a signal indicative of the position assumed by said second piston.

6. In a hydraulic system as defined in claim **1**, said passage being stepped and having an internal shoulder and said second piston having an outer periphery provided with axially extending grooves, said grooves and said shoulder cooperating with one another so as to establish communication between said reservoir and said chamber when said second piston is in said starting position.

* * * * *