A. LAW.

TOGGLE HEAD.

APPLICATION FILED APR. 8, 1912.

1,052,731.

Patented Feb. 11, 1913.

Fig. 1.

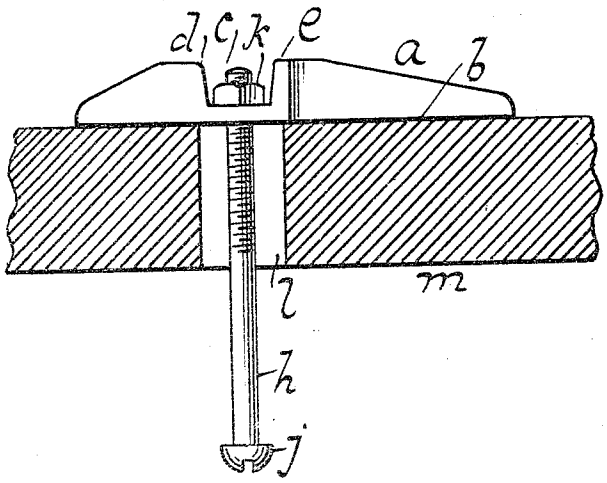

Fig. 5.

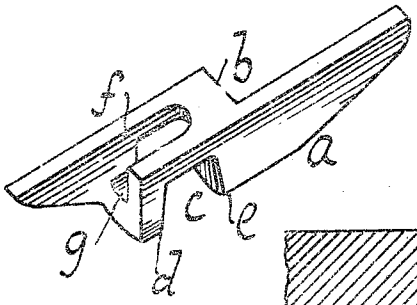

Fig. 2.

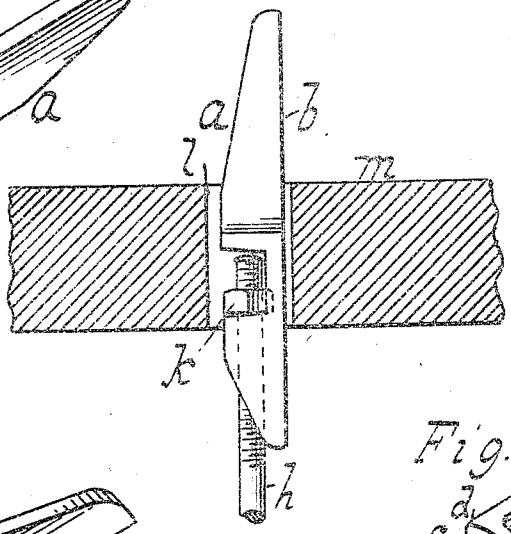

Fig. 3.

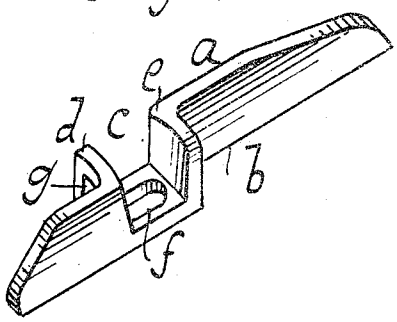

Fig. 4.

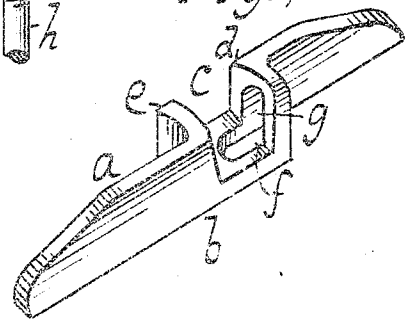

Witnesses:
William Miller
Chris. H. Almstaedt

Inventor
Albert Law
By his Attorneys
Haiff & Bouland.

UNITED STATES PATENT OFFICE.

ALBERT LAW, OF BROOKLYN, NEW YORK.

TOGGLE-HEAD.

1,052,731. Specification of Letters Patent. Patented Feb. 11, 1913.

Application filed April 8, 1912. Serial No. 689,125.

To all whom it may concern:

Be it known that I, ALBERT LAW, a citizen of the United States, residing at Brooklyn, county of Kings, State of New York, have invented new and useful Improvements in Toggle-Heads, of which the following is a specification.

My invention consists of a new and improved toggle-head, for use in combination with a bolt.

As is well known, it is frequently necessary to anchor a bolt either in a ceiling or in a brick or tile wall etc. It is also necessary and very desirable to have the head of the bolt placed in the toggle head or anchor and the threaded end projecting. So far as I am aware, it has not been possible heretofore to accomplish this result, viz: have the head of the bolt in the anchor and the threaded end projecting outward through the wall or ceiling. In addition to the above mentioned advantage, my toggle-head also is extremely simple and cheap to manufacture and by its peculiar construction uniform bearing is given to the nut or bolt head so that great strength and stability is attained.

In the accompanying drawings: Figure 1 is a side elevation of my toggle-head in operation. Fig. 2 shows the same with the bolt placed in it as the head is being inserted through an opening. Fig. 3 is a perspective top view showing a solid wall. Fig. 4 is a perspective top view showing a slotted wall. Fig. 5 is a perspective of the toggle-head inverted.

The toggle-head is constructed preferably of metal, and consists of a rectilinear head *a* having a flat base *b*. In the center of the head is a recess *c* cut so as to form shoulders *d* and *e*. This recess *c* is formed so that the walls of the shoulders *d* and *e* are inclined outwardly from the base. The base under the shoulder *d* is cut out so as to form an elongated slot *f* shown more fully in Fig. 5. The shoulder *d* also has a slot *g* shown in Figs. 4 and 5.

The operation of the device is as follows:—An ordinary bolt *h* having a head *j* is inserted in the slot *f* the point protruding through the slots *f* and *g* to the opening *c* where the nut *k* is placed on the bolt as shown in Fig. 2. The head and bolt are then inserted through the opening *l* in the wall or tile *m* until the entire toggle-head passes through the opening. It will be noticed that the part of the head having the shoulder *e* is longer and consequently heavier than the part having the shoulder *d*. When the head is passed through the opening *l* it will fall of its own weight into the position shown in Fig. 1. The bolt *h* will then swing through the slots *f* and *g* into the position shown in Fig. 1 and the nut *k* will press firmly against the base *b* in the opening *c*.

While the drawings show the device in operation with the bolt *h* having its head *j* extending outwardly, the reverse result can be obtained by first placing the threaded portion of the bolt *h* through the head *f* so that the head *j* will rest on the base *b*. By means of the form of the slots *f* and *g*, the bolt can then be swung to the position shown in Fig. 2, the only difference being that in that event, the head of the bolt *j* will be in the same position as the nut *k* as shown in Fig. 2. In other words it will be comprehended that the slots *f* and *g* form an angular arrangement whereby the head can be set either at right angles or in a parallel line with the axis or stem of the bolt.

I claim:—

1. A toggle head consisting of an anchor, including a rectilinear base with longitudinal walls extending from the base, shoulders projecting at an angle from the walls to form the sides of a ⊔ shaped recess, an angular slot situated in a shoulder and base of the recess; and a bolt adapted for coöperation with the slot.

2. A toggle head consisting of an anchor, including a rectilinear base with longitudinal walls extending from the base, shoulders projecting at a reverse angle from the walls to form the sides of a ⊔ shaped recess, an angular slot situated in a shoulder and base of the recess; in combination with a bolt adapted for insertion into the slot.

3. A toggle head consisting of an anchor, including a rectilinear base with longitudinal walls extending laterally from the base, shoulders projecting at a reverse angle from the walls to form the sides of a ⊔ shaped

recess, one of the walls being longer than the other to counterweight one end of the anchor, an angular slot located in a shoulder and base of the recess; combined with a bolt adapted for insertion into the slot and coöperation with the recess.

In testimony whereof I have hereunto set my hand in the presence of two subscribing witnesses.

ALBERT LAW.

Witnesses:
WM. E. WARLAND,
CHRIS. H. ALMSTAEDT.