(No Model.) 2 Sheets—Sheet 1.

L. SCHULTZ.

QUILTING MACHINE.

No. 456,737. Patented July 28, 1891.

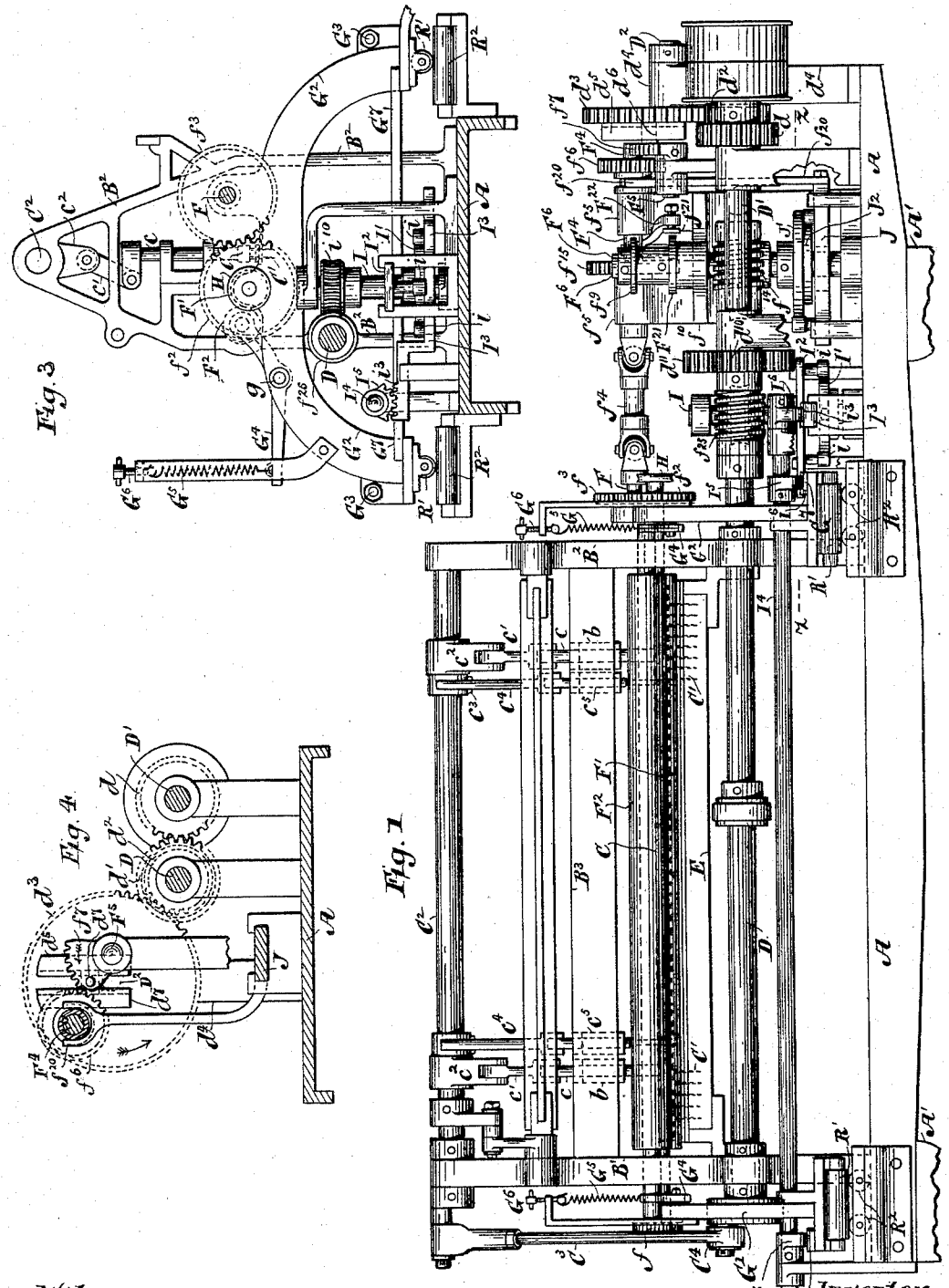

Witnesses
C. R. Ferguson
Wm. M. Iliff

Inventor
Louis Schultz
By his attorneys
Gifford & Brown

THE NORRIS PETERS CO., PHOTO-LITHO., WASHINGTON, D. C.

(No Model.) 2 Sheets—Sheet 2.

L. SCHULTZ.

QUILTING MACHINE.

No. 456,737. Patented July 28, 1891.

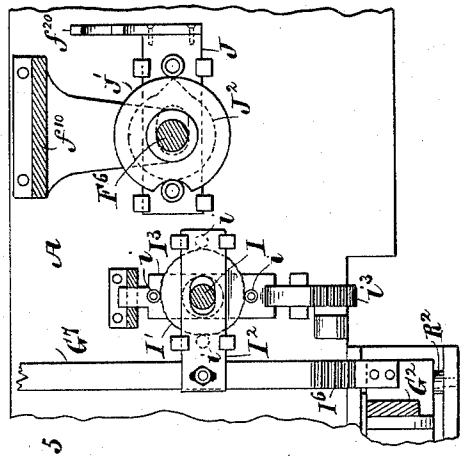

Fig. 5

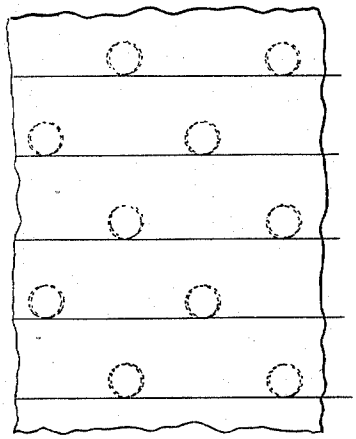

Fig. 6

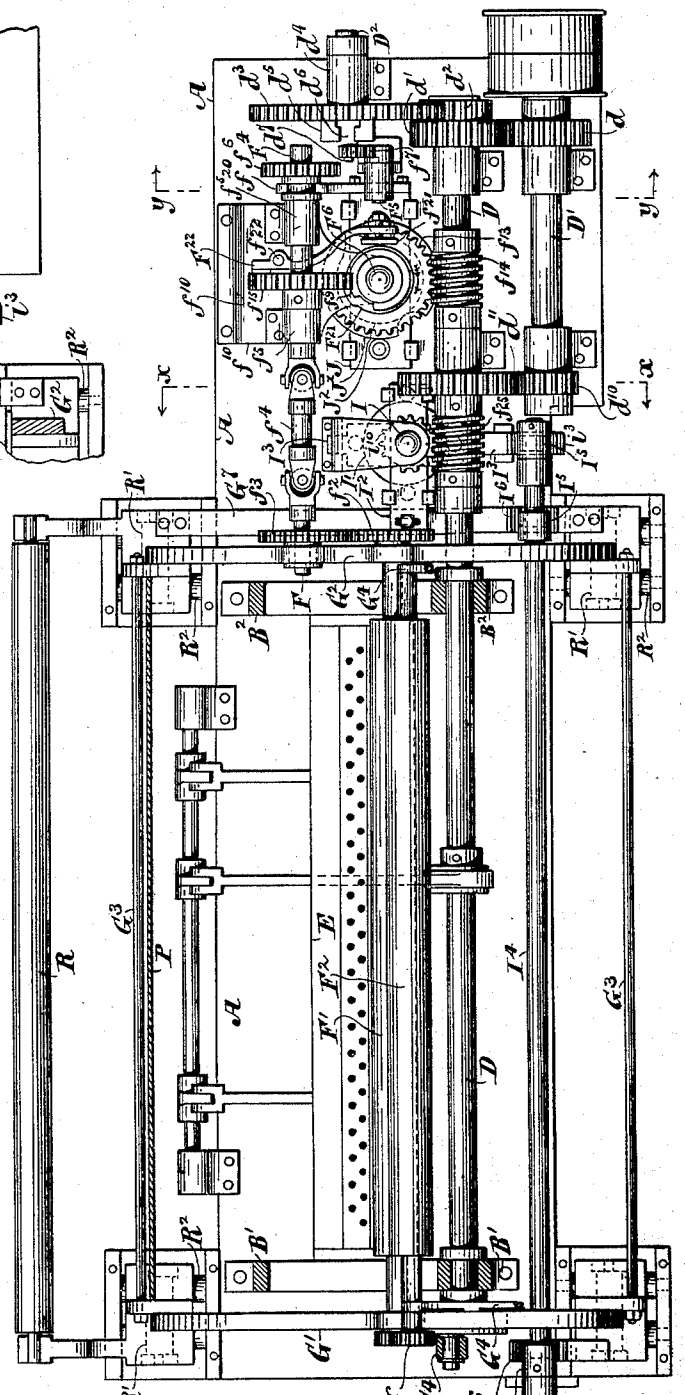

Fig. 2

Witnesses
C. R. Ferguson
Wm. M. Cliff

Inventor
Louis Schultz
By his attorneys
Gifford & Brown

THE NORRIS PETERS CO., PHOTO-LITHO., WASHINGTON, D. C.

UNITED STATES PATENT OFFICE.

LOUIS SCHULTZ, OF NEW YORK, N. Y., ASSIGNOR TO THE EXCELSIOR QUILTING COMPANY, OF SAME PLACE.

QUILTING-MACHINE.

SPECIFICATION forming part of Letters Patent No. 456,737, dated July 28, 1891.

Application filed October 15, 1889. Serial No. 327,096. (No model.)

To all whom it may concern:

Be it known that I, LOUIS SCHULTZ, of New York, in the county and State of New York, have invented a certain new and useful Improvement in Quilting-Machines, of which the following is a specification.

I will describe a quilting-machine embodying my improvement, and then point out the novel features in the claims.

In the accompanying drawings, Figure 1 is a back view of a machine embodying my improvement, certain parts being broken away to economize space. Fig. 2 is a plan or top view of the machine, certain parts being represented in section. Fig. 3 is a transverse vertical section taken at the plane of the dotted line *x x*, Fig. 2, and looking in the direction indicated by the arrow which is contiguous to such line. Fig. 4 is a transverse vertical section taken at the plane of the dotted line *y y*, Fig. 2, and looking in the direction indicated by the arrow which is contiguous to such line. Fig. 5 is a horizontal section of a portion of the machine, taken at the plane of the dotted line *z z*, Fig. 1. Fig. 6 is a face view of a piece of quilted fabric, which may be worked in this machine.

Similar letters of reference designate corresponding parts in all the figures.

A designates the bed of the machine. As here shown, it is supported on legs A'.

B' B^2 designate two side frames, secured in the present instance to the bed A by bolts or otherwise to occupy parallel positions.

C designates the needle-bar. This has secured to it a series of needles C', which, in the present instance, are arranged in two rows, so that the needles of the second row will be behind those of the first row and opposite the spaces between those of the first row. This arrangement of the needles may be understood by reference to Figs. 1 and 3, where some of the needles are represented, and it also may be understood by reference to the zigzag row of circles, which in Fig. 2 represent holes in the cover of the shuttle or loop-chamber.

Secured to the needle-bar are a number of upright rods *c*, which work vertically within brackets *b*, attached to the front of the bar C, and are connected at the upper end by links *c'* with arms c^2, affixed to a rock-shaft C^2. On the rock-shaft are other arms c^3, and these are connected with rods c^4, secured to a presser-foot bar. The rock-shaft is oscillated by means of a rod C^3, deriving motion from a crank C^4, arranged upon a shaft D. The shaft D is driven from a driving-shaft D' through the agency of a small gear-wheel d^{10}, affixed to the shaft D', and a large gear-wheel d^{11}, affixed to the shaft D. The shaft D will obviously be driven at a less rapid speed than the speed of the driving-shaft D'. It will, however, be driven constantly when the machine is in operation, and hence during the entire operation of the machine the needles will operate. It will be readily understood that the rock-shaft imparts a vertically-reciprocating motion to the needle-bar and needles. The needles in this machine have only an up-and-down movement.

In the machine is included shuttle mechanism, and E designates the race-bar therefor.

In the present example of the improvement the fabric to be quilted is fed lengthwise under the needles and also moved laterally. Rollers F' F^2 serve to move it longitudinally. These rollers are supported in a carriage G' G^2 G^3. This carriage consists of two side frames G' G^2 and rods G^3, securing them together. It is free to move in any direction in a horizontal plane. As shown, these side frames G' G^2 have secured to them rollers R', extending widthwise of the machine parallel with the needle-bar and journaled in brackets fastened to the lower extremities of the side frames. Beneath these rollers R' are pairs of rollers R^2, extending forwardly and backwardly of the machine and journaled in brackets secured to the bed A. The rollers R' rest upon and are supported by the rollers R^2. It will readily be understood that the rollers R' may roll upon the rollers R^2 in the direction of the axes of the latter, so as to enable the carriage to move backwardly and forwardly, and that the rollers R^2 can rotate under the rollers R' to enable the carriage to move laterally, or, in other words, lengthwise of the needle-bar. The feed-roller F' is journaled in the side frames G' G^2 of the carriage. The roller F^2 is journaled in levers G^4, which are fulcrumed between their ends by pins or

bolts g to the side frames G′ G² of the carriage. At the rear ends the levers G⁴ are connected to springs G⁵, attached to screws G⁶, engaging with upright bars fastened to the side frames of the carriage. These springs force the roller F² with greater or less pressure toward the roller F′.

The fabric to be quilted is at first rolled on a roller R, attached to the carriage. Thence it is drawn by the feed-rollers over an apron P, extending beneath the needles and attached to the carriage.

The feed-rollers F′ F² are geared together by gear-wheels f, affixed to their journals at one end. To the roller F′ is affixed a gear-wheel f^2. The gear-wheel f^2 derives motion from a gear-wheel f^3, affixed to shaft F, which is supported at one end in the side frame B² of the carriage. The shaft F does not partake of the lateral movement of the carriage. Hence there must be a relative sliding movement between it and the carriage. Because of this the gear-wheel f^3 is to be secured to the shaft F by means of a spline or feather and connected to the bearing of the carriage receiving the shaft F, so that the gear-wheel will move with the carriage and have a sliding movement relatively to the shaft F. The shaft F is connected by a universal joint f^4 to a shaft F⁴. This shaft F⁴ is supported in bearings f^5, supported by the bed A of the machine.

Owing to the universal joint between the shafts F and F⁴, the carriage is able to move forwardly and backwardly. It is therefore possible for the carriage to move in any and all directions in a horizontal plane without interfering with the transmission of rotary motion to the feed-rollers.

The shaft F⁴ has mounted on it a gear-wheel f^6, and the latter, and through it the shaft F⁴, derives motion periodically from a toothed segment f^7, affixed to a shaft F⁵. This shaft F⁵ is supported in a bracket or stand erected upon the bed A.

The manner in which the shaft F⁵ is rotated is an important feature of the present improvement. I will now describe it in detail. The driving-shaft D′ has affixed to it a gear-wheel d, which engages with a gear-wheel d', which in the present instance is loosely supported upon the shaft D and has affixed to it a gear-wheel d^2. Obviously any rotary motion transmitted to the wheel d' will also be transmitted to the wheel d^2. The wheel d^2 engages with a gear-wheel d^3, mounted upon a shaft D², supported in a bracket d^4, erected upon the bed A. The wheel d^3 is arranged at one side of the segment f^7, and is provided upon that side which is adjacent to the segment f^7 with a groove. This groove extends in the direction of a radius of the wheel. In the present instance this groove is formed by affixing two parallel bars d^5 to the wheel d^3. The bars may be affixed by casting, or formed separately, and attached by screws or otherwise. Between these bars a block d^6 is so arranged that it may move lengthwise of the bars. The segment f^7 is provided near that end which enters the wheel f^6 each time the segment engages with said wheel with a pin d^7, which extends into the block d^6. Obviously the same effect might be produced by affixing a pin to the block and extending it through a hole in the segment. As the wheel d^3 rotates, it imparts a rotary motion to the segment f^7 with a variable speed. In Fig. 4 the segment is represented as just about entering the wheel f^6, and it will be observed that the pin d^7 is near the axis of the wheel d^3. The motion imparted to the segment at the start will therefore be a very slow one; but as the rotation continues the pin d^7 will gradually become nearer to the periphery of the wheel d^3 and the motion imparted by the wheel d^3 to the segment f^7 will grow more rapid.

It will be readily understood that only when the segment f^7 engages with the gear-wheel f^6 is motion transmitted to the feed-rollers. In making such a pattern as illustrated in Fig. 6 it will only be necessary to operate the feed-rollers to shift or feed the fabric from one row of circles to the next corresponding row of circles, and this is what is accomplished by the periodical driving through of the segment f^7, in the manner described.

It may not be desirable to have the segment f^7 impart motion to the gear-wheel f^6 and shaft F⁴ in each revolution of the segment. Owing to this I connect the gear-wheel f^6 with the shaft F⁴, so that it may slide lengthwise of said shaft into and out of the plane of the segment, it being connected to the shaft by a spline or feather, so as to rotate therewith. I have shown the hub of the wheel f^6 as provided with a circumferential groove receiving an arm f^{20} on a bar or plate J. This bar or plate is shown as provided with bowls or rollers coacting with cams J′ J², affixed to a shaft F⁶. These cams serve to impart such a movement to the bar or plate as to cause the movement of the gear-wheel f^6 into and out of the plane of the segment f^7. The shifting of the wheel f^6 will be performed quickly between one descent of the needles and the next following descent thereof and without providing for any unusual dwell of the needles.

F²¹ is a cam affixed to the shaft F⁶ and operating a brake-lever F²², employed for the purpose of gradually checking the rotation of the shaft F⁴ when it becomes disengaged from the toothed segment f^7. As here shown, this brake consists of a lever fulcrumed by a pin f^{22} to a standard or bracket, and having at one end an adjustable bearing-plate f^{21} coacting with the cam, and at the other end a pad bearing against a wheel f^{15}, which is affixed to the shaft F⁴. This wheel f^{15} is not merely employed to coact with the brake, but is provided with teeth to serve as a lock-wheel. Its teeth coact with a stop flange or disk f^9, affixed to the shaft F⁶. The stop

flange or disk f^9 is circular in form, but has a notch or opening in its periphery. Except when this notch comes opposite the lock-wheel f^{15}, the stop flange or disk engages with the lock-wheel f^{15} and holds the latter against rotation. While the shaft F^4, carrying this lock-wheel, is thus held against rotation, the feed-rollers are precluded from rotating. One end of the notch or opening in the stop flange or disk comes opposite the lock-wheel f^{15} just before one end of the toothed segment f^7 enters into engagement with the gear-wheel f^6 on the shaft F^4, and the notch or opening is not carried beyond the lock-wheel until after said toothed segment has gone out of engagement with the wheel f^6. It follows, therefore, that the stop flange or disk locks the shaft F^4 and the feed-rollers at all times, except when the toothed segment f^7 engages with the wheel f^6 to rotate the shaft F^4 and the feed-rollers. The shaft F^6 derives its rotary motion through a gear-wheel f^{13}, which is affixed to it, and engages with a worm f^{14}, affixed to the shaft D.

On one of the journals of the roller F′ may be affixed a pulley H to enable the roller to transmit rotary motion to a roller upon which the completed fabric will be taken up or wound.

Having now described the mechanism by which rotary motion is imparted to the feed-rollers, and explained the motions imparted to the carriage, I will now describe the means which are here employed for producing the motions of the carriage.

I designates an upright shaft, supported from the bed A and having affixed to it a cam I′. This cam operates in conjunction with two bars or plates I^2 I^3, fitted to slide in bearings and provided with bowls or rollers *i*. The bar or plate I^2 is connected to a bar G^4, secured to the carriage G′ G^2 G^3, and this bar or plate extends lengthwise of the machine. It will be obvious that the carriage will be moved laterally by the action of the cam I′ upon the bar or plate I^2. The bar or plate I^3 is provided with a toothed rack i^3, which engages with a toothed segment I^5, affixed to a shaft I^4, journaled in bearings supported by the bed A. The shaft I^4 has affixed to it two toothed segments I^5, and these engage with toothed racks I^6, secured to the carriage G′ G^2 G^3. It will be obvious that whenever the cam I′ imparts a movement to the bar or plate I^3 this motion will be transmitted to the carriage and will cause the carriage to move backward and forward. The cam I′, it will be seen, serves to produce a movement of the carriage in two different directions, and these combined movements will result in a movement of the carriage in a circular or other sinuous path. By varying the cam the movement of the carriage will be varied. It will be seen that the cam is stepped and that the bars or plates I^2 I^3 are longitudinally slotted to embrace the shaft I. The stepping of the cam is not, however, essential, and the bars or plates may be made differently. The shaft I is shown as having affixed to it a worm-wheel i^{10}, which engages with a worm f^{25}, affixed to the shaft D. In the present instance the shaft I is so timed as to make two revolutions for one of the shaft F^6, and consequently for each shifting of the gear-wheel f^6 into the plane of the segment f^7. This relation is adopted so that the needles may sew the circles twice around before the feed-rollers shift the goods.

I have other applications for Letters Patent numbered serially 327,451 and 326,671, showing some combinations of parts which are herein represented and not herein claimed. I therefore reserve the right to claim in the other applications the novel combinations not herein claimed.

What I claim as my invention, and desire to secure by Letters Patent, is—

1. In a sewing-machine, the combination of a carriage for moving material to be stitched in a circular or a similar path, mechanism for imparting the requisite movement to the carriage, feed-rollers supported by the carriage and operated so as to remain stationary during the movement of the carriage and to rotate while the carriage is at rest, and a series of needles which are reciprocated by mechanism substantially such as described at a uniform speed during the movements of the carriage and feed-rollers, substantially as specified.

2. In a sewing-machine, the combination of a series of needles reciprocating constantly by mechanism substantially such as described during the operation of the machine, a carriage for moving material to be stitched in a circular or a similar path, mechanism substantially such as described for causing the movements of said carriage, feed-rollers supported by the carriage and operated so as to remain stationary during the movement of the carriage and to rotate while the carriage is at rest, a segment, mechanism for operating the segment, a shaft transmitting motion to the feed-rollers, and a wheel sliding axially on said shaft into and out of the plane of the segment, substantially as specified.

3. In a sewing-machine, the combination of a carriage for supporting material to be stitched, mechanism for moving said carriage periodically in a circular or a similar path, feed-rollers journaled in said carriage and mechanism whereby said rollers will be held stationary during the movement of the carriage and rapidly rotated when the carriage comes to rest, a series of needles, and mechanism for reciprocating the needles continuously during the entire operation of the machine, substantially as specified.

4. In a sewing-machine, the combination of a series of needles reciprocating constantly by mechanism substantially such as described during the operation of the machine, a carriage for moving material to be stitched in a circular or a similar path, mechanism substantially such as described for moving the car-

riage, feed-rollers supported by the carriage and operated so as to remain stationary during the movement of the carriage and to rotate while the carriage is at rest, a toothed segment, a shaft transmitting motion to the feed-rollers, a wheel fitted to slide axially on said shaft into and out of the plane of the toothed segment, cam mechanism moving the sliding wheel axially of this shaft, a brake for the shaft of the sliding wheel, and a cam for effecting the operation of said brake when the sliding wheel is moved out of the plane of the toothed segment, substantially as specified.

5. In a sewing-machine, the combination of a series of needles reciprocating constantly during the operation of the machine, a carriage for moving material to be stitched in a circular or a similar path, feed-rollers supported by the carriage and operated so as to remain stationary during the movement of the carriage and to rotate while the carriage is at rest, a toothed segment, a shaft transmitting motion to the feed-rollers, a wheel on said shaft receiving motion from the toothed segment, and a wheel imparting motion to the toothed segment through a groove and block or rib, substantially as specified.

6. In a sewing-machine, the combination of a series of needles reciprocating constantly during the operation of the machine, a carriage for moving material to be stitched in a circular or a similar path, feed-rollers supported by the carriage and operated so as to remain stationary during the movement of the carriage and to rotate while the carriage is at rest, a toothed segment, a shaft transmitting motion to the feed-rollers, a wheel on said shaft sliding into and out of the plane of the toothed segment to periodically receive motion therefrom, a cam for moving said sliding wheel, and a wheel for imparting motion to the toothed segment and connected therewith by means of a groove and block or rib, substantially as specified.

7. In a sewing-machine, the combination of a series of needles reciprocating constantly during the operation of the machine, a carriage for moving material to be stitched in a circular or a similar path, feed-rollers supported by the carriage and operated so as to remain stationary during the movement of the carriage and to rotate while the carriage is at rest, a toothed segment, a shaft transmitting motion to the feed-rollers and deriving motion from the toothed segment, a wheel for imparting motion to the toothed segment and connected therewith through a groove and block or rib, a bar or plate connected with the carriage aforesaid, a cam operating this bar or plate, a second bar or plate operated by the same cam, and a rock-shaft deriving motion from the second bar or plate and imparting it to the carriage, substantially as specified.

LOUIS SCHULTZ.

Witnesses:
C. R. FERGUSON,
WM. M. ILIFF.