Nov. 18, 1952 G. C. MITCHELL 2,617,999

FOLDING BED

Filed June 20, 1949 2 SHEETS—SHEET 1

Fig. 1.

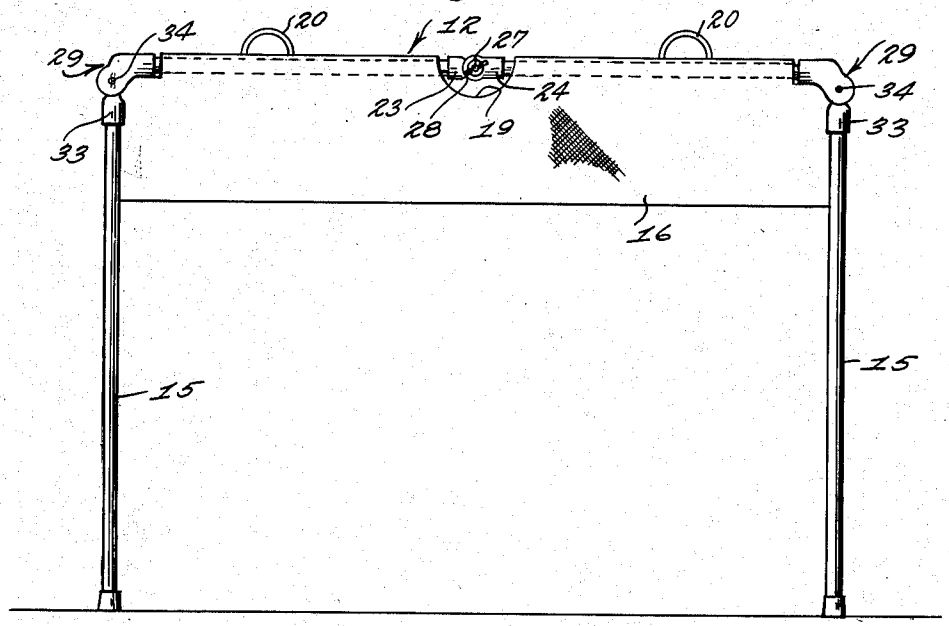

Fig. 2.

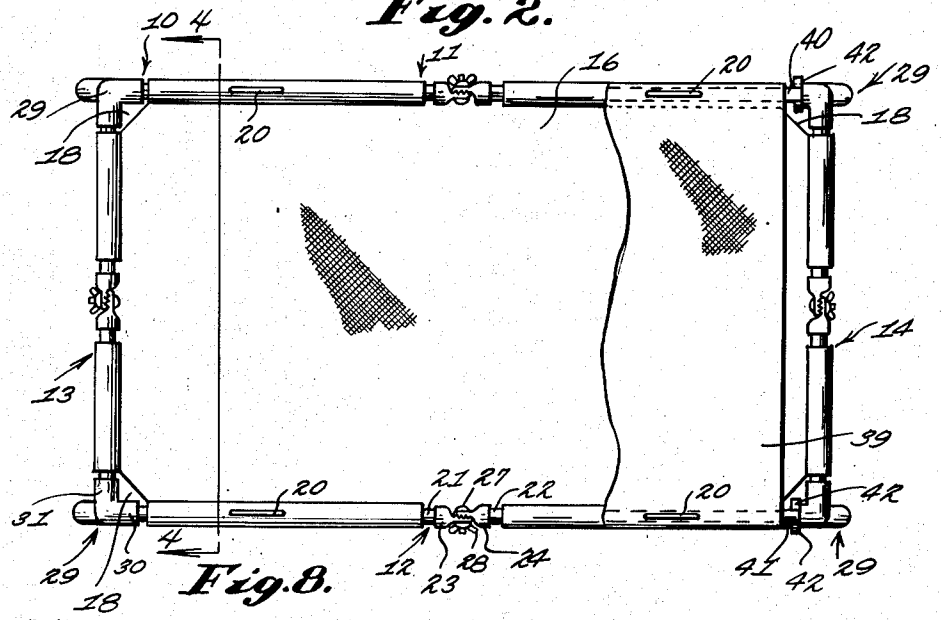

Fig. 8.

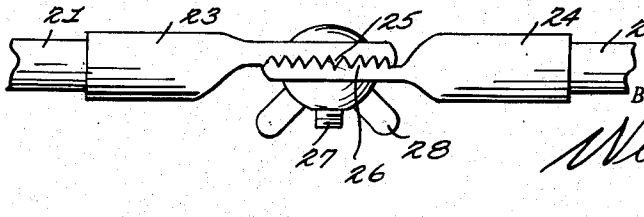

INVENTOR.
GLADYS C. MITCHELL
BY
Wilfred Lawson
ATTORNEY

Nov. 18, 1952 G. C. MITCHELL 2,617,999

FOLDING BED

Filed June 20, 1949 2 SHEETS—SHEET 2

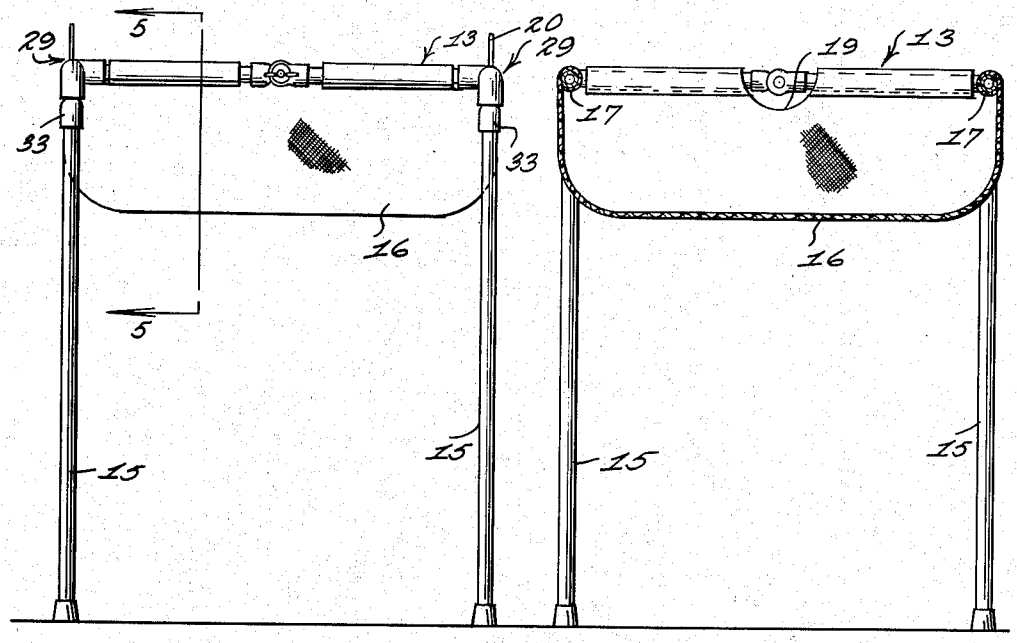

Fig. 3.

Fig. 4.

Fig. 5.

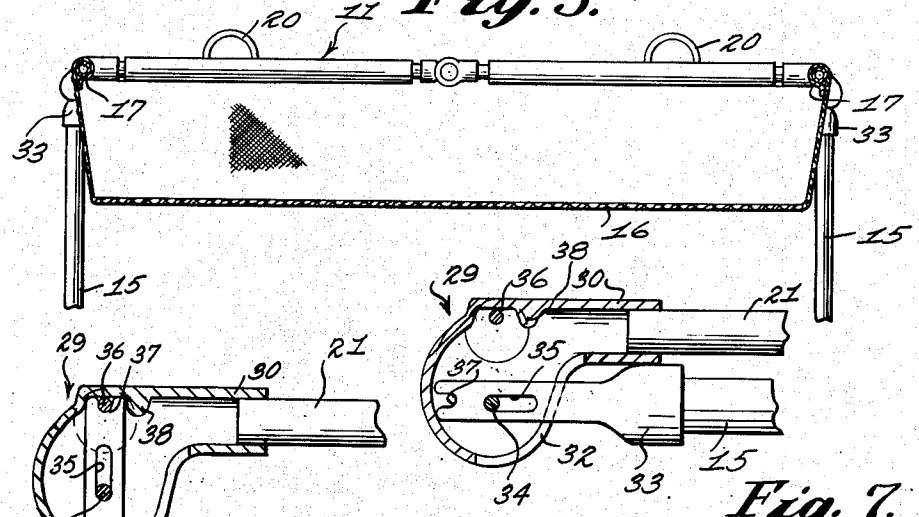

Fig. 7.

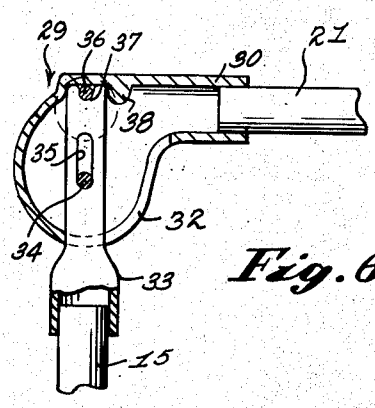

Fig. 6.

INVENTOR.
GLADYS C. MITCHELL
BY
ATTORNEY

Patented Nov. 18, 1952 2,617,999

UNITED STATES PATENT OFFICE

2,617,999

FOLDING BED

Gladys C. Mitchell, Eugene, Oreg.

Application June 20, 1949, Serial No. 100,105

1 Claim. (Cl. 5—99)

1

This invention relates to a bed, and more particularly to a bed for an infant.

The object of the invention is to provide a bed for an infant, the bed being strong, and light in weight, and the bed being constructed so that it can be folded into a compact parcel when not being used. Another object of the invention is to provide a collapsible bed which has a flexible top or body member that can be removed easily when the body member is to be laundered.

Still another object of the invention is to provide a bed which has handles thereon to facilitate the carrying thereof, and which can be readily used for other purposes besides a bed, such as for a table, or bassinet.

A further object of the invention is to provide an infant's folding table which is extremely simple and inexpensive to manufacture.

Other objects and advantages will be apparent during the course of the following description.

In the accompanying drawings, forming a part of this application, and in which like numerals are used to designate like parts throughout the same:

Figure 1 is a side elevational view of the collapsible bed for a baby, according to the present invention;

Figure 2 is a top plan view of the bed with parts broken away, and showing an attachment thereon when the device is to be used for other purposes;

Figure 3 is an end elevational view of the bed;

Figure 4 is a sectional view taken on the line 4—4 of Figure 2;

Figure 5 is a sectional view taken on the line 5—5 of Figure 3;

Figure 6 is an enlarged sectional view showing the corner hinge for the structure;

Figure 7 is a view similar to Figure 6, but showing the position of the parts of the hinge when the legs are folded; and

Figure 8 is an enlarger fragmentary elevational view, illustrating the hinge connection for the side and end members.

Referring in detail to the drawings, the numeral 10 designates a frame which includes a pair of spaced parallel side members 11 and 12. The frame 10 further includes a pair of spaced parallel end members 13 and 14 which extend between the side members 11 and 12 and are connected thereto.

For supporting the frame 10, a plurality of spaced parallel legs 15 are connected to the frame, and the legs 15 are adapted to be folded or collapsed inwardly when the bed is not being

2

used so as to form a compact parcel, as for transporting the device in a vehicle.

For supporting a baby, a body member 16 is provided, and the body member 16 is preferably fabricated of a flexible material, such as canvas or cloth. The upper edges of the body member 16 are folded over as at 17 and secured to the main portion of the body member 16, by suitable stitching so as to define hems for receiving the side and end members of the frame. The corners of the body member 16 are cut away as at 18, Figure 2, and intermediate portions 19 of the body member are cut away, Figure 1, and these cut away portions serve to prevent the body member 16 from becoming entangled or binding the various hinge connections of the structure. Projecting through the body member 16 is a plurality of handles 20, whereby the bed can be carried manually to any desired location. Further, the handles 20 can be used to help maintain the legs 15 immobile in their folded position.

Each of the side members 11 and 12, and each of the end members 14 and 15 comprises a pair of sections which are pivotally connected together. These sections can thus be pivoted together so as to enable the bed to be folded into a compact unit. A means is provided for pivotally connecting the sections together, and as this hinge means is the same in construction for each of the members 11 through 13, only one will be described in detail. Thus, for example, the side member 12 includes a pair of sections 21 and 22. Secured to one end of each section 21 is a hinge unit 23 which is provided with a plurality of teeth 25 thereon. Secured to the other section 22 is a similar hinge unit 24 which has a plurality of teeth 26 thereon that are adapted to mesh or coact with the teeth 25. A threaded bolt 27 extends through the units 23 and 24, and a wing nut 28 is arranged in threaded engagement with the bolt 27 for maintaining the parts in assembled relation. Thus, normally when the bed is being used, the units 23 and 24 are in the positions shown in Figures 1, 2, and 8. When the bed is to be transported in a vehicle or the like, the wing nut 28 is loosened on the bolt 27, so that the units function as hinges whereby the sections 21 and 22 can be pivoted together. It will be apparent that the other members 11, 13 and 14 are provided with similar pairs of sections which are pivotally connected together by similar hinge units.

The bed is further provided with a plurality of corner castings 29 which are hollow. All of the castings 29 have the same construction and there-

fore it will suffice to describe only one in detail. The castings 29 serve to connect the meeting ends of the side and end members together, the castings 29 also provide a pivotal connection between the frame 10 and the legs 15. Each of the castings 29 includes a pair of socket portions 30 and 31 which are adapted to be connected to the ends of the side and end members of the frame. Referring to Figures 6 and 7, it will be seen that each of the castings 29 is provided with a slot 32 in the bottom thereof. Secured to the upper end of each leg 15 is a post 33 which projects through the slot 32 and into the interior of the casting 29. A pin 34 pivotally connects the post 33 to the casting 29, the pin 34 passing through a slot 35 in the post 33, Figures 6 and 7. The casing 33 is provided with a slot 37 in its upper end, and the recess 37 is adapted to receive a pin 36 which is secured to the casting 29. Thus, normally the legs 15 are vertically disposed so that the pin 36 is seated in the slot 37 whereby accidental folding movement of the legs 15 will be prevented. A shoulder 38 is secured to the interior of the casting 29, and the shoulder 38 serves to limit pivotal movement of the legs 15.

The present invention can be used for purposes other than an infant's bed. Thus, referring to Figure 2, there is shown an arrangement whereby the device can be used as a table or the like. Thus, a flexible support member 39 has its longitudinal side edges connected to a pair of side strips 40 and 41. A plurality of clamps 42 are secured to the strips 40 and 41 and the clamps 42 are adapted to embracingly receive the side members 11 and 12.

From the foregoing, it is apparent that a bed has been provided which can be used for supporting an infant or baby therein. The various parts of the bed are collapsible so that the bed can be folded into a compact parcel wherein the device can be readily transported in a vehicle or the like. Further, when the bed is being used, the various parts thereof are so constructed that they will be locked safely in extended position so that accidental collapse of the bed will be prevented. Thus, to fold the bed into a compact unit, the wing nuts 28 are loosened whereupon the sections which comprise the end and side members may be pivoted together. Then, the post 33 of each leg is moved so that its slot 37 is out of engagement with the pin 36 whereupon the legs 15 can also be pivotally moved towards or contiguous to the parts of the frame.

The frame and legs are preferably fabricated of a specially treated wood so as to provide a bed which is strong and light in weight. When the bed is folded, pockets are formed wherein baby's blankets, diapers, and other items may be readily carried therein. When using the support member of 39, the bed is converted to a table such as a dressing table for changing the baby's clothes. The device can be used for giving the baby a sun bath and can be set up near the dinner table if desired.

What I claim:

In a folding bed, a frame including a pair of spaced parallel side members, a pair of spaced parallel end members extending between said side members, a hollow casting for connecting said end members to said side members, there being a slot in the lower part of each of said castings, a plurality of legs for supporting said frame, each of said legs having a post extending from its top end and projecting through the slot in one of said castings, each post having a slot in and extending longitudinally thereof, a pin extending through the slot of each post and pivotally connecting the post to the adjacent casting, a securing element fixed in the upper part of each casting above the slot therein, each post having a slot in the end thereof for receiving the adjacent securing element to lock the legs in a position in which they are perpendicular to the side and end members, each of said side and end members including a pair of sections, means pivotally connecting said pairs of sections together, said last named means comprising a hinge unit secured to each of the meeting ends of said sections, a plurality of cooperating teeth arranged on each of said units, and means for maintaining the teeth of adjacent hinge units in engagement with each other.

GLADYS C. MITCHELL.

REFERENCES CITED

The following references are of record in the file of this patent:

UNITED STATES PATENTS

Number	Name	Date
606,355	Moore	June 28, 1898
1,173,459	Palmer	Feb. 29, 1916
1,240,359	O'Reilly	Sept. 18, 1917
1,827,687	McCandless	Oct. 13, 1931
1,983,889	Anderson	Dec. 11, 1934
2,254,939	Elias	Sept. 2, 1941