Office de la Propriété Intellectuelle du Canada
Un organisme d'Industrie Canada

Canadian Intellectual Property Office
An agency of Industry Canada

CA 2194018 C 2005/12/06

(11)(21) 2 194 018

(12) BREVET CANADIEN
CANADIAN PATENT

(13) C

(22) Date de dépôt/Filing Date: 1996/12/24

(41) Mise à la disp. pub./Open to Public Insp.: 1997/08/29

(45) Date de délivrance/Issue Date: 2005/12/06

(30) Priorité/Priority: 1996/02/29 (8-043510/1996) JP

(51) Cl.Int.^{7}/Int.Cl.^{7} H04Q 7/32, H04M 1/56

(72) Inventeur/Inventor:
MURATA, TAKASHI, JP

(73) Propriétaire/Owner:
MITSUBISHI DENKI KABUSHIKI KAISHA, JP

(74) Agent: ADAMS, THOMAS

(54) Titre : RADIOTELEPHONE NUMERIQUE POUR SYSTEME NUMERIQUE MOBILE DE RADIOCOMMUNICATION
(54) Title: DIGITAL RADIO TELEPHONE FOR A DIGITAL MOBILE RADIO COMMUNICATION SYSTEM

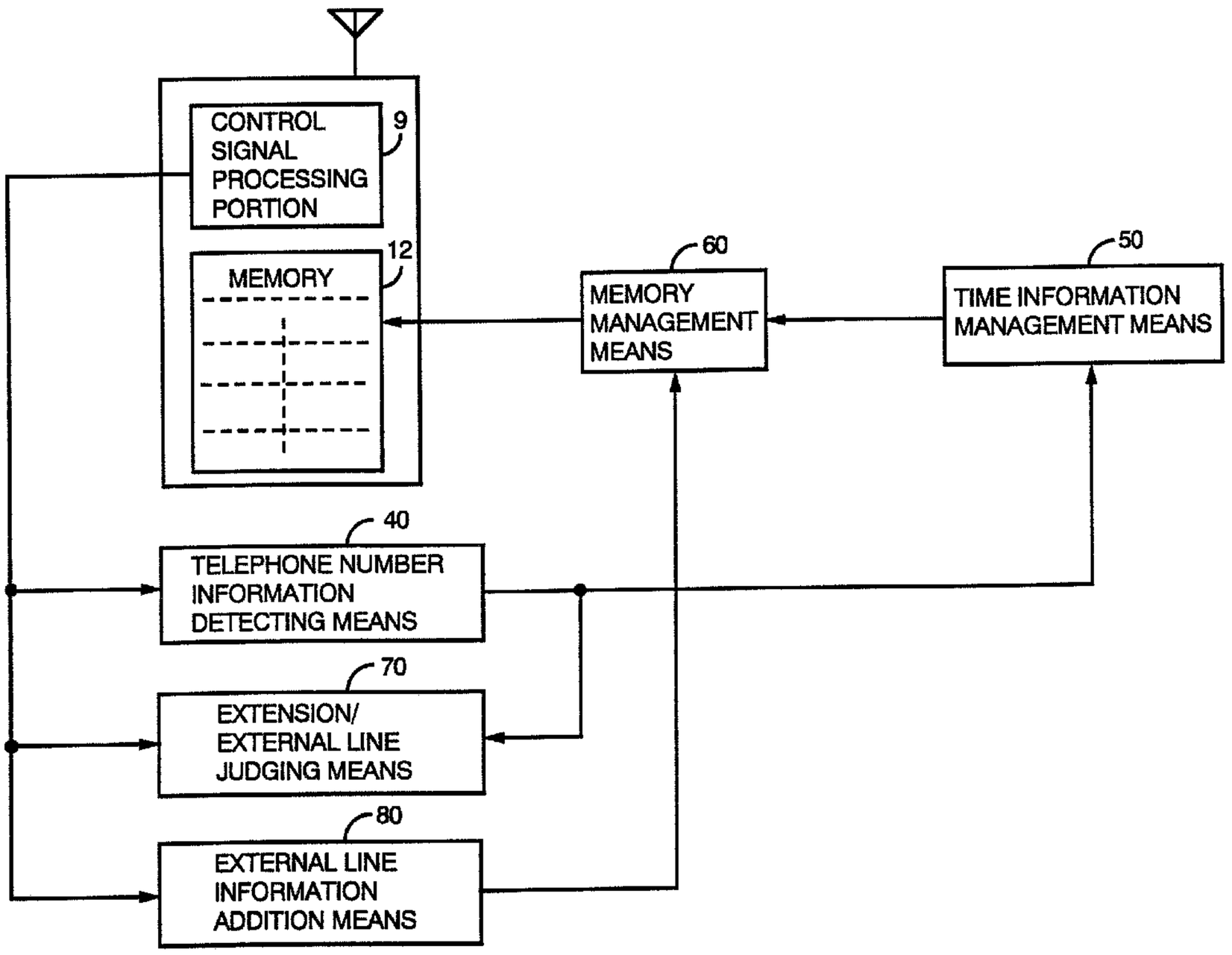

(57) Abrégé/Abstract:
A digital radio telephone of the present invention comprises a radio portion for receiving a radio signal modulated by an encoded digital signal including control information, for demodulating and outputting the encoded digital signal, a control signal processing portion for decoding the demodulated encoded digital signal to obtain the control information, a telephone number information detecting means for detecting whether the decoded control information includes calling party telephone number information, a memory for storing the telephone number information, a time information management means for specifying an incoming time of the telephone number information to output a time information, and a memory management means for recording the telephone number information corresponding to the time information into the memory.

ABSTRACT OF THE DISCLOSURE

A digital radio telephone of the present invention comprises a radio portion for receiving a radio signal modulated by an encoded digital signal including control information, for demodulating and outputting the encoded digital signal, a control signal processing portion for decoding the demodulated encoded digital signal to obtain the control information, a telephone number information detecting means for detecting whether the decoded control information includes calling party telephone number information, a memory for storing the telephone number information, a time information management means for specifying an incoming time of the telephone number information to output a time information, and a memory management means for recording the telephone number information corresponding to the time information into the memory.

DIGITAL RADIO TELEPHONE FOR A DIGITAL MOBILE RADIO COMMUNICATION SYSTEM

BACKGROUND OF THE INVENTION

Field of the Invention

The invention relates to a digital radio telephone for use in a digital mobile radio communication system, such as a land mobile/portable phone system or a PHS (Personal Handyphone System) employing a digital telephone system, for example. The invention particularly relates to a digital radio telephone having a function of storing a calling party telephone number (hereinafter, referred to as "calling party incoming telephone number") and a function of calling the stored phone number (hereinafter referred to as "incoming redialing function").

Description of the prior art

Figure 11 of the accompanying drawings shows a system configuration of an analog radio telephone having a conventional incoming redialing function, as disclosed in laid-open Japanese patent publication No. 5-14274. This type of conventional telephone receives calling party telephone number information of an incoming call together with an analog audio signal via a radio channel using a communication channel in the form of a DTMF (Dual Tone Multi Frequency) signal where a plurality of frequency signals are superposed, and then stores the calling party telephone number information in a memory.

Operation of the incoming redialing function of the analog radio telephone is explained below. First, a radio signal including control information received via an antenna 6 using a control channel is demodulated by a radio portion 5 and outputted as a control signal which is an analog signal in a base band. Control information in the demodulated control signal is decoded by a decoder 15 and is processed by a microcomputer 10 to establish the radio channel. A radio signal including the telephone number information received via the antenna 6 using the communication channel is then demodulated by the radio portion 5 and outputted as the DTMF signal which is the analog signal in the base band. The telephone number information in the demodulated DTMF signal is detected, judged, and encoded by a DTMF receiver 16. The output signal from the DTMF receiver 16 is then processed by the microcomputer 10 and stored in a memory 12. On the other hand, if the user effects "calling by redialing", to dial a

stored calling party telephone number, the telephone number information stored in advance in the memory 12 by the microcomputer 10 is read out, encoded by an encoder 17, modulated by the radio portion 5, then transmitted from the antenna 6 as a radio signal.

Since the incoming redialing function in the conventional analog radio telephone constructed as explained above requires the DTMF receiver for detecting the telephone number information, in addition to the construction for operating the telephone function itself, there is a problem that the conventional analog radio telephone is complicated. Also, since the conventional analog radio telephone redials using the telephone number information stored only in the memory, it is difficult to provide an incoming redialing function having high-performance or multifunction in consideration of user service.

It is an object of the present invention to provide a digital radio telephone having a high-performance incoming redialing function by maximally using the digital processing ability naturally included in a digital radio telephone.

SUMMARY OF THE INVENTION

According to the present invention, a digital radio telephone comprises:

a radio portion for receiving a radio signal modulated by an encoded digital signal including control information, for demodulating and outputting said encoded digital signal;

a control signal processing portion for decoding said demodulated encoded digital signal to obtain said control information;

a telephone number information detecting means for detecting whether the decoded control information includes destination telephone number information;

a time information management means for specifying an incoming time of the telephone number information to output said time information;

a memory including an incoming storing memory for storing incoming telephone number information detected by the telephone number information detecting means and time information of a plurality of incoming time specified by the time information management means, and a registering memory for storing a pre-registered telephone number and its identification number; and

a memory management means for storing said telephone number information associated with said time information into said incoming storing memory, regardless of the response to the destination at the time of the incoming call.

According to one embodiment of the invention, a digital radio telephone used for an external line and an extension line further comprises an extension/external line judging means for judging whether the telephone number information is from the extension or from the external line; an external line information addition means for

adding an external line calling information to the telephone number information according to a judging result to output as new telephone number information.

Preferably, the memory management means in the digital radio telephone records a predetermined number of telephone number information entries in the memory, starting with telephone number information received most recently.

Alternatively, the memory management means may store in the memory only one telephone number information which is most-recently received among a plurality of identical telephone number information.

According to a further embodiment of the invention, a digital radio telephone further comprises an operating portion for supplying an operating signal, and a display portion for displaying various information during operation. The memory comprises a first memory portion for storing the telephone number information included in the control information and a second memory portion for registering other telephone number information, inputted from the operating portion, as identification information corresponding to the telephone numbers; and the operating portion instructs the display portion to display the telephone number information recorded in the first memory portion together with the corresponding identification information recorded in the second memory portion.

The digital radio telephone may further comprise an operating portion for supplying an operating signal, and a display portion for displaying various information during operation, and the operating portion instructs the display portion to display the telephone number information entries one after another in a circulative way starting with telephone number information received most recently.

Preferably, the operating portion in the digital radio telephone initiates a calling process according to the telephone number information when predetermined telephone number information recorded in the memory is displayed on the display portion.

An embodiment of the invention will now be described by way of example only, with reference to Figures 1 to 10 of the accompanying drawings (Figure 11 illustrating prior art previously described).

BRIEF DESCRIPTION OF THE DRAWINGS

Figure 1 is a functional block diagram showing a system configuration of a digital radio telephone of an embodiment of the present invention;

Figure 2 is a functional block diagram related to a recording process of an incoming telephone number of the embodiment of the present invention shown in Figure 1;

Figure 3 is a block diagram related to a detailed process of a memory management means of the embodiment of the present invention shown in Figure 2;

Figure 4 is a flow chart related to the recording process of the incoming telephone number of the present invention;

Figure 5 is a diagram to explain a storage configuration of the incoming telephone numbers of the present invention;

Figure 6 is a flow chart related to a display process of the incoming telephone number of the present invention;

Figure 7 shows a displaying order of the incoming telephone numbers in the present invention;

Figure 8 is a flow chart related to an incoming redialing process of the incoming telephone number of the present invention;

Figure 9 is a flow chart related to a memory dial registering process of the incoming telephone number of the present invention;

Figure 10 is a diagram to explain a storage construction of the telephone numbers in the memory dial registering memory of the present invention; and

Figure 11, labelled PRIOR ART, is a block diagram showing a system configuration of a conventional digital radio telephone.

DETAILED DESCRIPTIONS OF THE PREFERRED EMBODIMENTS

Embodiment 1.

The present invention is concretely explained focusing on a digital radio telephone compatible with both a private (extension) line and a public (external) line. Figure 1 shows a system configuration of the digital radio telephone of an embodiment of the present invention. The system shown in Figure 1 comprises a microphone 1 which is used by a user of the digital radio telephone to input audio information such as speech as an analog audio signal, an A/D converter 2 for converting the inputted analog audio signal into a digital audio signal, a voice encoding/decoding portion 3 for encoding the digital audio signal outputted from the A/D converter 2 using a data compression encoding system such as a VSELP (Vector Sum Excited Linear Predictive Coding)

system to obtain an encoded digital signal, and decoding the encoded digital signal in a reverse process to the encoding to obtain a digital audio signal, a switch 4 for selecting either the encoded digital signal from the voice encoding/decoding portion 3 or an encoded digital signal from a control signal processing portion 9 (as described later), a radio portion 5 having a transmission modulating function for converting the encoded digital signal from the switch 4 into a radio signal transmitted by an antenna 6 and a reception demodulating function for converting the radio signal received by the antenna 6 into an encoded digital signal, a D/A converter 7 for converting the digital audio signal decoded by the voice encoding/decoding portion 3 into an analog audio signal, a speaker 8 for outputting the audio information as the analog audio signal, a control signal processing portion 9 for decoding control information included in the encoded digital signal from the radio portion 5, and for encoding telephone number information stored in a memory 12 (as described later), and outputting the telephone number information to the switch 4 as an encoded digital signal, a microcomputer 10 for recording the telephone number information included in the control information from the control signal processing portion 9 in the memory 12 according to the time when the information is received and for processing the telephone number information stored in the memory 12 in order to display it on the display portion 13 (as described later) by an operating portion 11, the operating portion 11 for reading the telephone number information out of the memory 12 for example and for inputting operating information such as carrying out calling as an operating signal, a memory 12 for storing the telephone number information processed by the microcomputer 10 as an incoming record information, a display portion 13 for displaying a message in response to the operating information and various operations, and a control timing generating circuit 14 for controlling switching timing of the switch 4. In Figure 1 a voice processing portion 100 is shown to comprise A/D converter 2, the voice encoding/decoding portion 3, and the D/A converter 7.

Figure 2 is a functional block diagram relating especially to a recording process of the incoming telephone number conducted in the microcomputer 10 in the system configuration of the digital radio telephone shown in Figure 1. Figure 2 shows a telephone number information detecting means 40 for detecting whether the telephone number information is included in the control information from the control signal processing portion 9; a time information management means 50 for specifying a receiving time of the control information including the telephone number information

according to the time from a clock portion (not shown) provided in the digital radio telephone and for outputting the time information; an extension/external line judging means 70 for identifying and judging whether the call is from the extension or from the external line, in case the telephone number information exists, by detecting extension/external line identification information included in the control information for example; an external line information addition means 80 for extracting the telephone number information from the control information and for outputting the telephone number information in the event that the call is from the extension line, while for extracting the telephone number information from the control information, adding external line calling information to the telephone number information, and outputting the telephone number information as new telephone number information in the event that the call is from the external line; and a memory management means 60 for recording the telephone number information from the external line information addition means 80 in the memory 12 (Figure 1) as incoming record information in correspondence to the time information from the time information management means 50.

Figure 3 is a functional block diagram especially relating to a detailed process conducted in the memory management means 60 shown in Figure 2 which is the functional block diagram regarding the incoming telephone number process conducted in the microcomputer 10. In Figure 3, a telephone number information comparison means 67 compares the telephone number information from the external line information addition means 80 with the telephone number precedingly recorded in the memory 12 and outputs whether these telephone number information are identical to each other. The operating portion 11 gives instructions to compare or not with the telephone number information. A vacant memory judging means 61 judges whether a vacant area exists in the memory 12 to store the telephone number information of a new incoming call according to an output of the telephone number information comparison means 67 ("record all" without comparison or "no identical information" as a result of comparison). A rerecording means 62 deletes unnecessary information (the oldest information or a plurality of identical information entries) of the incoming record information recorded in the memory 12 according to a judging result of the vacant memory judging means 61 ("no vacancy") or the output of the telephone number information comparison means 67 ("identical information" as a result of comparison) and keeps vacant areas to newly rerecord the remaining incoming record information. A

recording means 63 records the telephone number information in a desired area in the memory 12 in correspondence to time information as an incoming record information according to "vacant" as a judging result of the vacant memory judging means 61 or "vacant " as a judging result of the rerecording means 62. Hence, the operating portion 11 causes the display portion 13 to display the telephone number information one after another in a circulative manner beginning with the telephone number information which was most-recently received.

Figure 4 is a flow chart showing an operation of the recording process of the incoming telephone number. The operation of the present embodiment shown in Figure 2 is explained using Figures 3 and 4.

First, in step 401, the telephone number information detecting means 40 detects whether the telephone number information is included in the control information from the control signal processing portion 9. If the telephone number information is not included, the process is completed. If telephone number information is included, in a next step 402 the extension/external line judging means 70 identifies and judges whether the telephone is in the extension or in the external line. If the call is from the external line, in a next step 403, the external line information addition means 80 adds external line identifying information ("0" as the external line calling number, for example) to the telephone number information in the control information. If the call is in the extension, the external line information addition means 80 extracts the telephone number information from the control information and outputs the telephone number information. Then, in step 404, the time information management means 50 specifies the time when the telephone number information is received. In next step 405, the operating portion 11 instructs the microcomputer 10 whether to record all the same incoming numbers, or only the latest numbers, received form the same calling party, as determined by the user. If all the identical incoming telephone numbers are to be recorded, the operation goes to step 406. If only the latest incoming telephone number out of the identical incoming telephone numbers is to be recorded, the operation goes to a step 410. In step 410, the telephone number information comparison means 67 compares the latest incoming telephone number information with the incoming telephone number information recorded previously in incoming recording memory 121 (Figure 3) which comprises a first memory portion in the memory 12. If the incoming telephone number information is not identical to the registered telephone number information, the operation goes to step 406.

On the other hand, if the incoming telephone number information is identical to the recorded telephone number information, the operation goes to step 411. In step 411, the recording means 63 deletes the incoming telephone number information recorded previously in the incoming recording memory 121 and goes to a step 408.

In step 406, the vacant memory judging means 61 judges whether the area for new incoming telephone number information in the incoming recording memory 121 can be used. If the incoming recording memory 121 is not occupied, the incoming telephone number information is recorded in the incoming recording memory 121 together with the corresponding time information. If the incoming recording memory 121 is occupied, the operation goes to a next step 407, where the telephone number information with the oldest time information is deleted from the incoming recording memory 121. In the next step 408, second oldest telephone number information is incremented and recorded into the location in the incoming recording memory 121 where the oldest time information is deleted. This operation is repeated continuously. In a next step 409, latest incoming telephone number information is finally recorded together with the time information into a location in the vacant incoming recording memory 121, following which the operation is completed. Figure 5 shows a memory arrangement of the incoming telephone numbers and their incoming times in the incoming recording memory 121. As shown in Figure 5, the respective incoming telephone number is stored in each address in combination with its incoming time in the incoming recording memory 121.

Figure 6 is a flow chart depicting operation of display processes associated with recordal of the incoming telephone number in the incoming recording memory 121. The operation of the display processes is explained below using Figures 3 and 6. First, in step 601, in response to user input, the operating portion 11 instructs to display the incoming telephone number. In next step 602, a memory record judging means 66 judges whether incoming telephone number information is recorded so far into the incoming recording memory 121. If no incoming telephone number information is recorded so far, in step 603, a warning sound is given from the speaker 8 to inform that no incoming telephone number information is recorded and also a warning indication is displayed on the display portion 13, whereupon, the display process is completed. If the incoming telephone number information is recorded, an incoming record reading means 64 reads an incoming telephone number received most recently together with its incoming time out of the incoming recording memory 121, and in step 604, the display

portion 13 displays the telephone number and the incoming time. In next step 605, the display process finishes according to an instruction of the operating portion 11. For displaying other incoming telephone numbers, in next step 606, the operating portion 11 instructs to switch the display indication of the incoming telephone number. In response to the instruction from the operation portion 11, in step 607, the display of an immediately preceding incoming telephone number or an immediately succeeding incoming telephone number is switched back and forth. After that, the operation returns to the step 605. Steps 605, 606, 607 are then repeated until a desired incoming telephone number is displayed.

Figure 7 shows a displaying order of the incoming telephone numbers when five incoming telephone numbers are recorded. According to the instructions from the operating portion 11, the displayed telephone number circulates in an increment direction or a decrement direction of the recorded incoming telephone numbers one after another. In the above mentioned display processes (steps 604, 607), only the incoming telephone number information and the incoming time recorded in the incoming recording memory 121 are displayed. In the event that memory dial information corresponding to the incoming telephone number information is registered in a registering memory 122 which is described later, additional information (e.g. name or company name corresponding to the telephone number) in the memory dial information can be displayed as related information at the same time in addition to the incoming telephone number information. In this case, in steps 604 and 607, the memory dial information in the registering memory 122 is searched (searching means is not shown) using a key word of the incoming telephone number which is read out by the incoming record reading means 64. Then, if the identical telephone number with the incoming telephone number is searched in the incoming record reading means 64, the additional information corresponding to the incoming telephone number is read out from the memory dial reading means 68 and displayed on the display portion 13.

Figure 8 is a flow chart illustrating operation of an incoming redialing process using the incoming telephone number recorded in the incoming recording memory 121. The operation of the incoming redialing process is explained below using Figures 3 and 8. First, in step 801, the operating portion 11 instructs the display portion 13 to display a desired incoming telephone number. The detailed processes from the start to the display indication for displaying the incoming telephone number is the same as the

display processes explained using Figure 6. Next, in step 802, the operating portion 11 instructs to carry out the incoming redialing. Then, in a next step 803, the telephone number information read out by the incoming record reading means 64 is transmitted as control information from the radio portion 5 (Figure 1) to the calling party telephone via the control signal processing portion 9 to make a telephone call.

Figure 9 is a flow chart showing an operation of a memory dial registering process of the incoming telephone number recorded in the incoming recording memory 121. In general, a memory dial function includes functions for registering frequently-used telephone numbers and their related additional information (names, names of companies corresponding to the telephone numbers) in advance as memory dial information, for accessing a desired telephone number or additional information, for displaying it and for making a telephone call with fewer operations. The registering is explained using also Figure 3. First, a calling party telephone number is inputted from the operating portion 11. Then, a registering means 65 registers the telephone number into a desired area in the registering memory 122 which is a second memory portion in the memory 12. At this time, it is possible to register the telephone number corresponding to an abbreviated title of the mate name and so on if required. Figure 10 shows a storage construction of the calling party telephone numbers and the related abbreviation of the mate names. As shown in Figure 10, the telephone numbers are combined with the corresponding abbreviations and registered in respective addresses in the registering memory 122. An operation of the memory dial registering process of the present invention is explained below using Figures 3 and 9. First, in a step 901, a desired incoming telephone number is displayed on the display portion 13 according to the instructions of the operating portion 11. The detailed processes from the start to the display indication for displaying the incoming telephone number is the same as the display processes explained using Figure 6. Then, in a step 902, the operating portion 11 instructs to register the memory dial. In a next step 903, the telephone number information read out by the incoming record reading means 64 is registered in a desired area in the registering memory 122, or the second memory portion, via the registering means 65.

What is claimed is:

1. A digital radio telephone comprising:

a radio portion for receiving a radio signal modulated by an encoded digital signal including control information, for demodulating and outputting said encoded digital signal;

a control signal processing portion for decoding said demodulated encoded digital signal to obtain said control information;

a telephone number information detecting means for detecting whether the decoded control information includes destination telephone number information;

a time information management means for specifying an incoming time of the telephone number information to output said time information;

a memory including an incoming storing memory for storing incoming telephone number information detected by the telephone number information detecting means and time information of a plurality of incoming time specified by the time information management means, and a registering memory for storing a pre-registered telephone number and its identification number; and

a memory management means for storing said telephone number information associated with said time information into said incoming storing memory, regardless of the response to the destination at the time of the incoming call.

2. A digital radio telephone according to claim 1, for use with an external line and an extension line, comprising:

an extension/external line judging means for judging whether said telephone number information is from the extension or from the external line; and

an external line information addition means for adding an external line calling information to said telephone number information according to a judging result to output as new telephone number information.

3. A digital radio telephone according to claim 1, wherein said memory management means deletes the telephone number information already registered from the incoming storing memory and stores the telephone number information detected by said telephone number information detecting means into the incoming storing memory in the event that the telephone number information detected by the telephone number information detecting means is registered in the incoming storing memory.

4. A digital radio telephone according to claim 1, further comprising:

an operating portion for supplying an operating signal; and

a display portion for displaying various information during operation,

wherein said operating portion instructs said display portion to display identification information corresponding to said telephone number together with the telephone number information in the event that the same telephone number as the telephone number information displayed on said display portion is stored in the registering memory when one of the telephone number information stored in the incoming storing memory is displayed on said display portion by means of the operating portion.

2194018

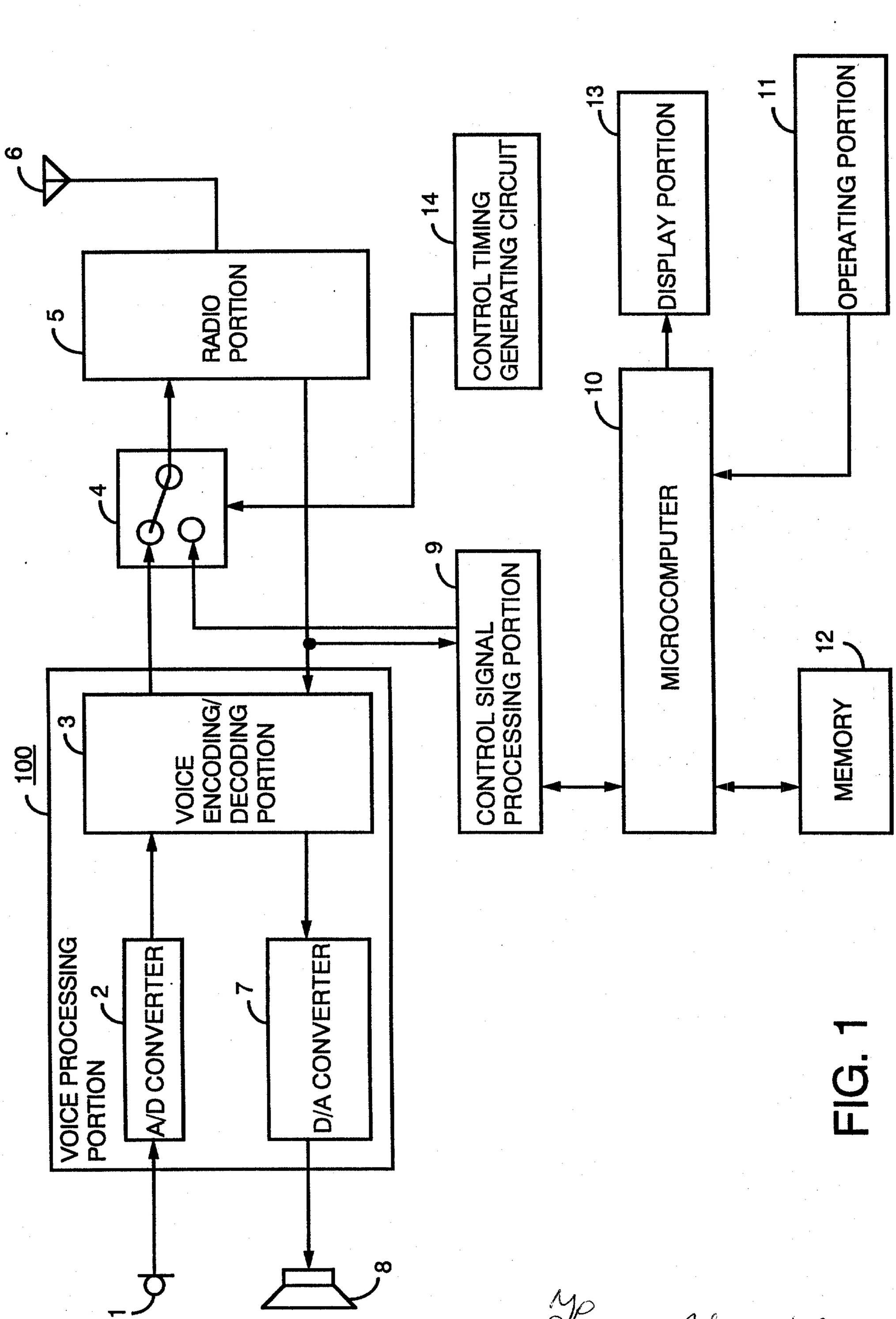

FIG. 1

Thomas Adams & Assoc.

AGENT FOR APPLICANT

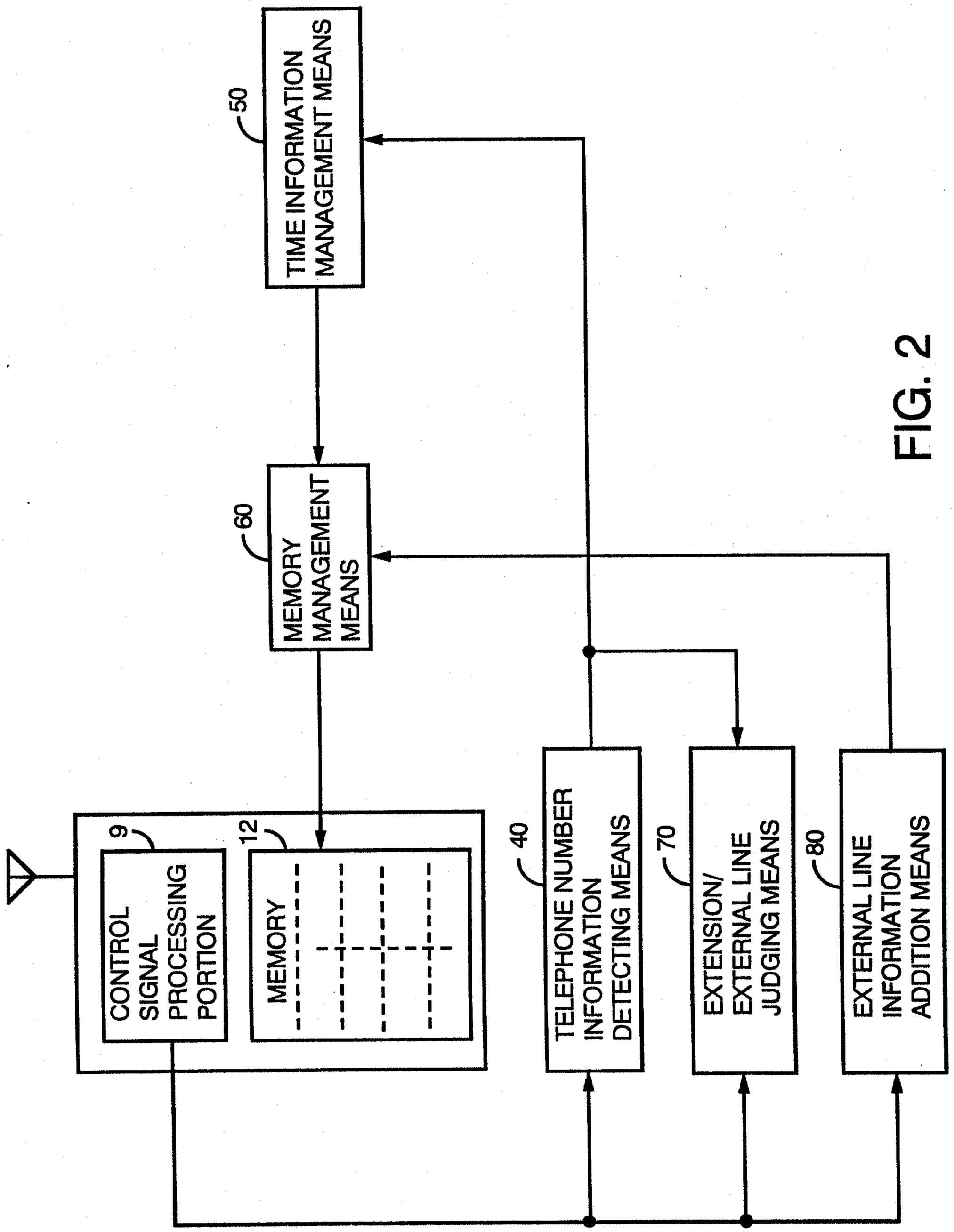

FIG. 2

Thomas Adams & Asser

AGENT FOR APPLICANT

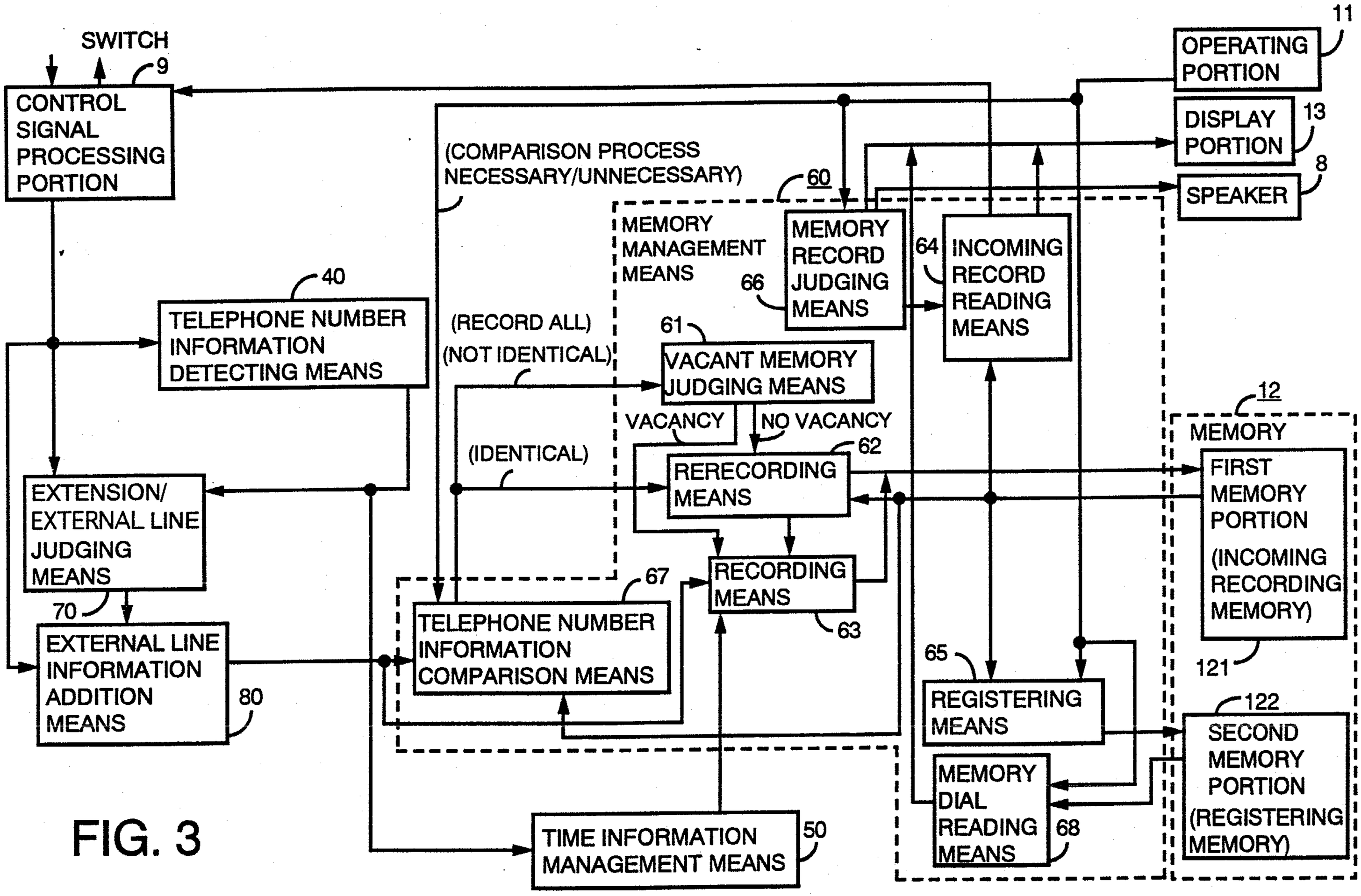

FIG. 3

Thomas Adams & Asser,
AGENT FOR APPLICANT

CA

2194018

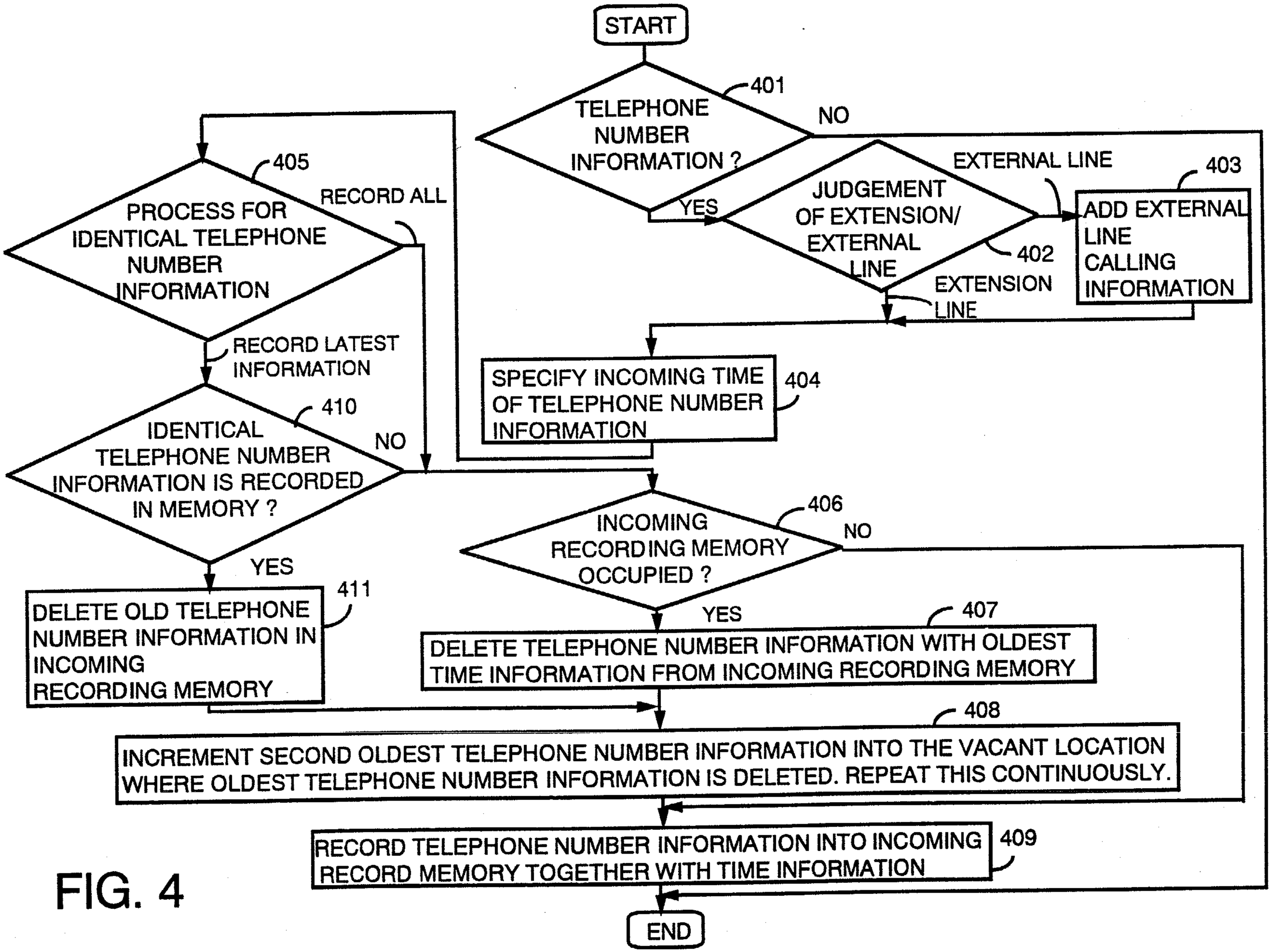

FIG. 4

2164018

 2194018

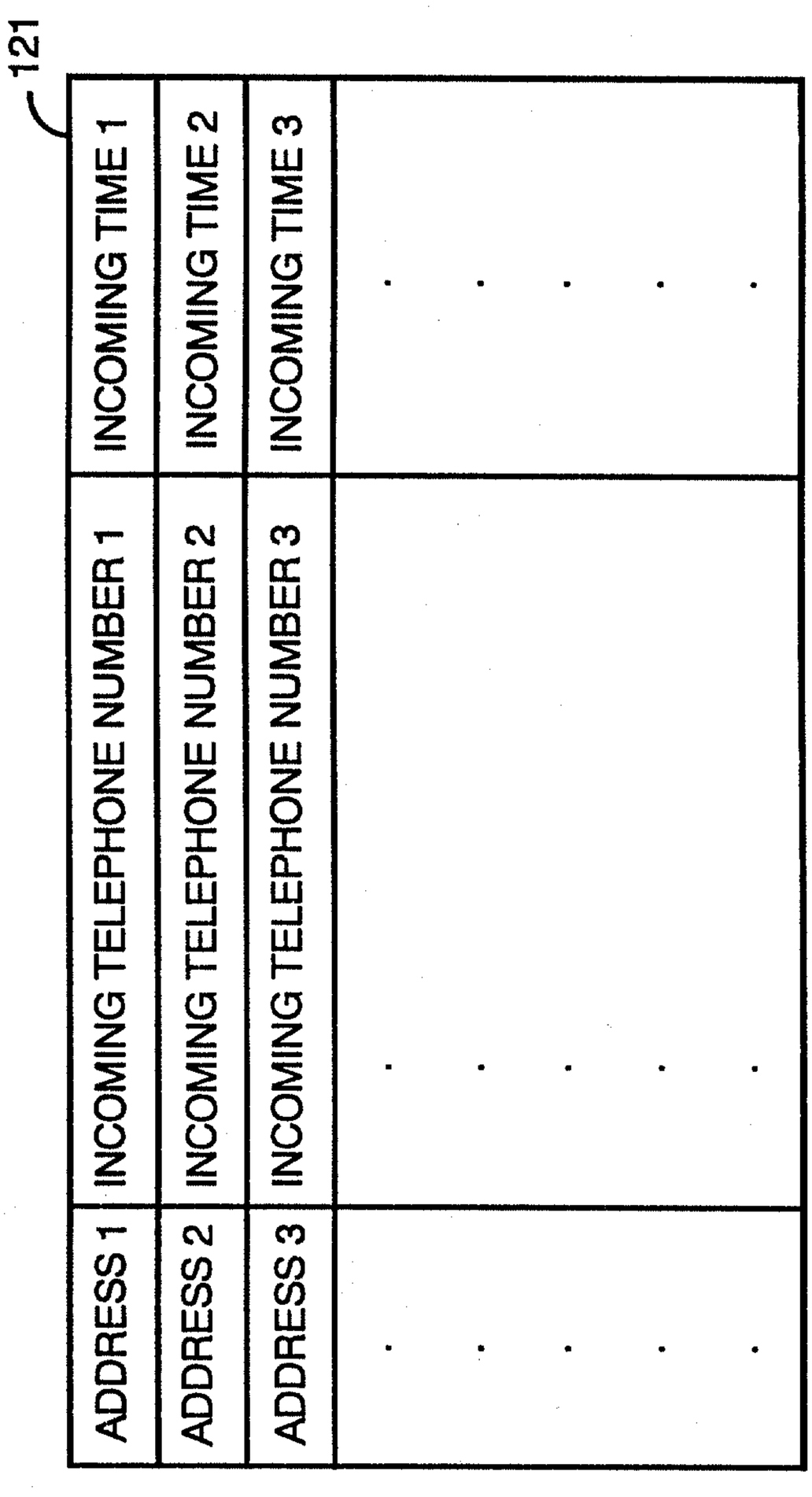

FIG. 5

Thomas Adams & Assoc.
AGENT FOR APPLICANT

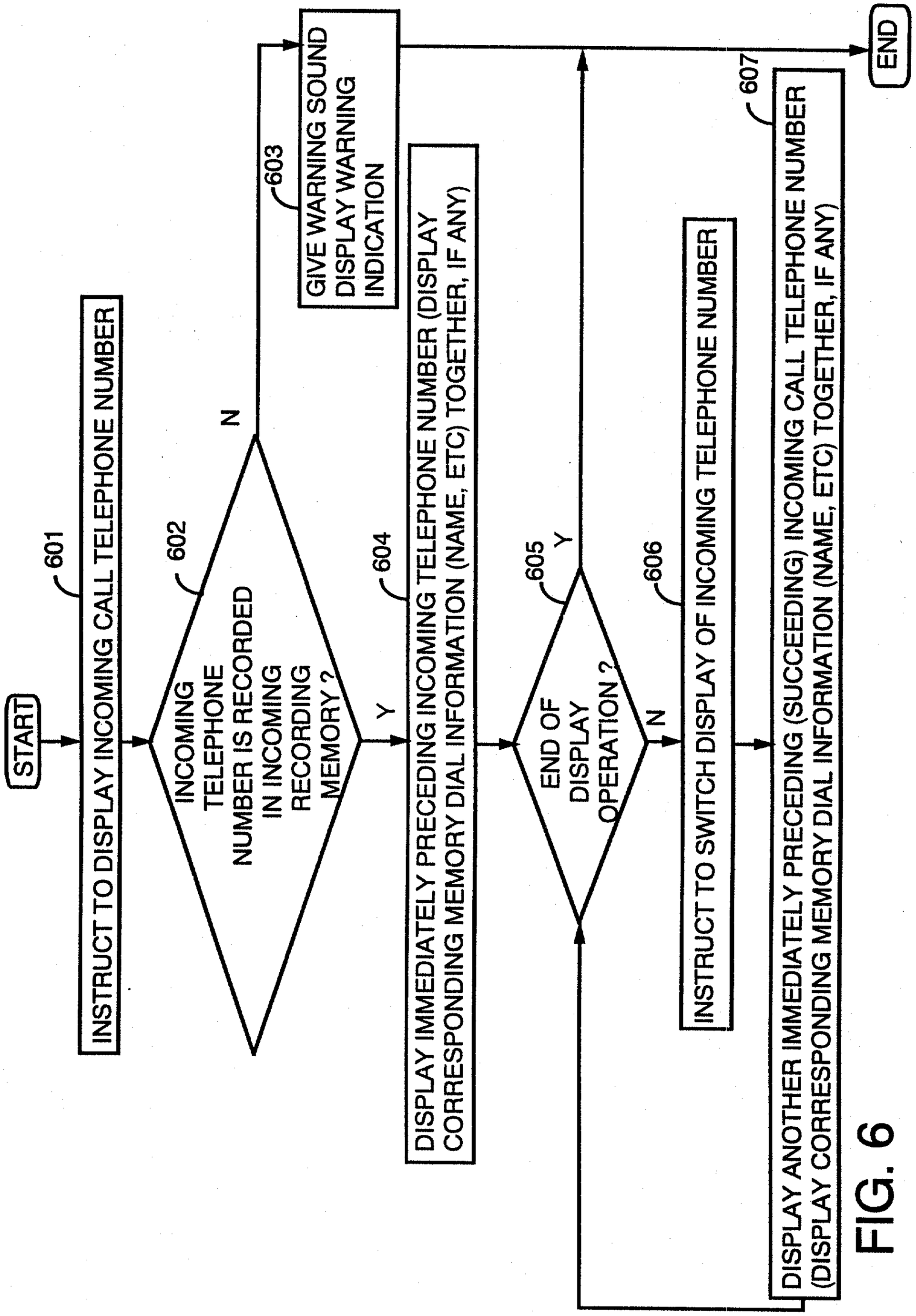

FIG. 6

Thomas Adams & Assoc
AGENT FOR APPLICANT

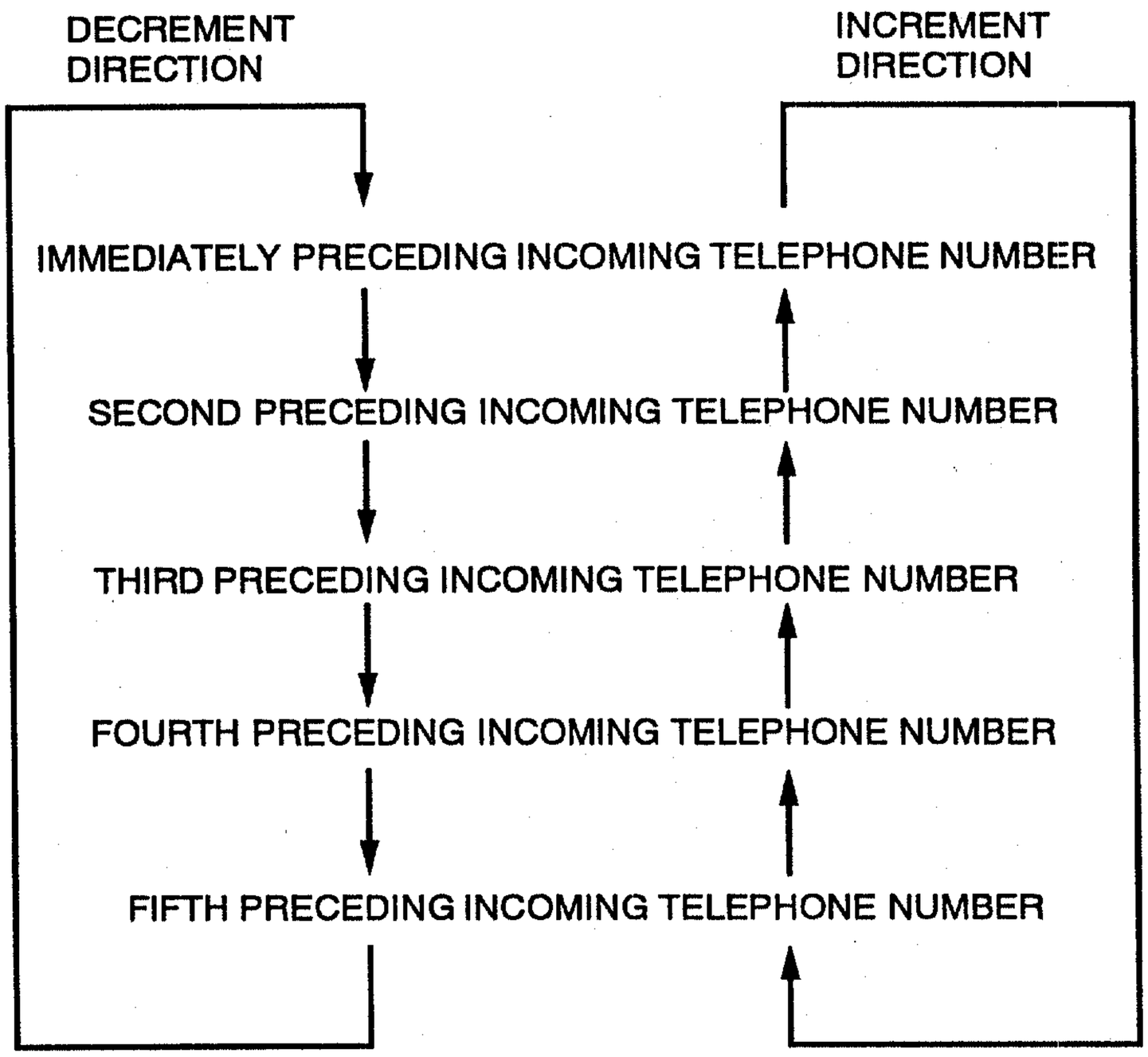

FIG. 7

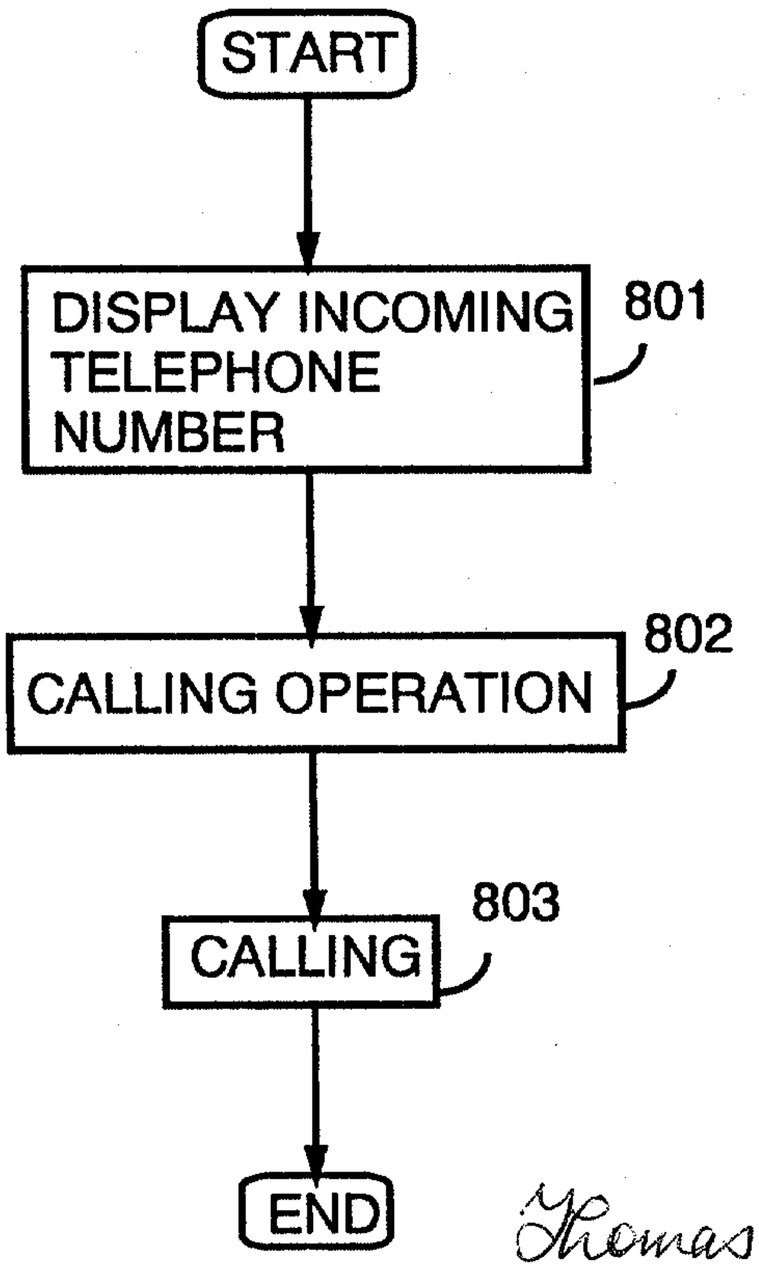

FIG. 8

Thomas Adams & Assoc-
AGENT FOR APPLICANT

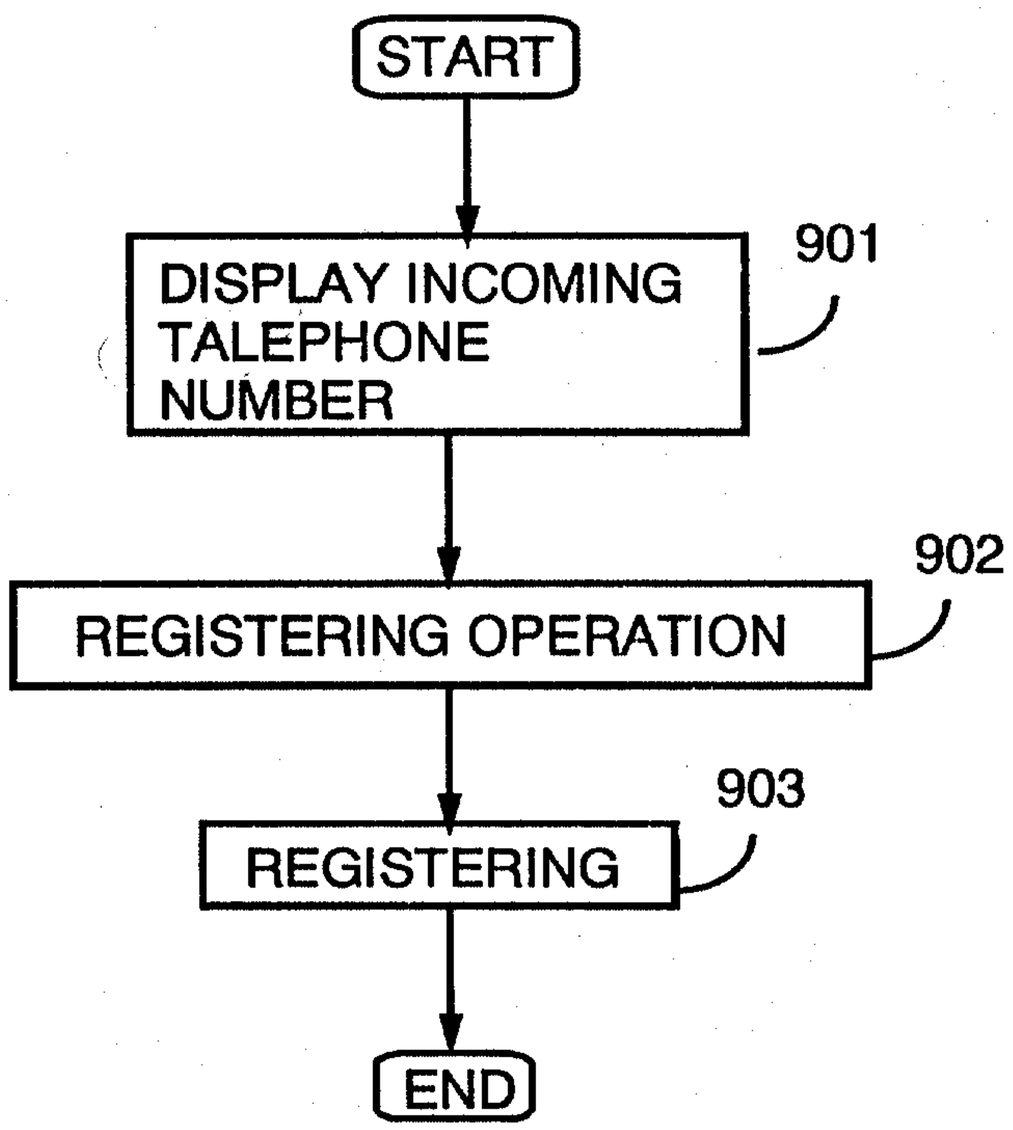

FIG. 9

121

ADDRESS 1	TELEPHONE NUMBER 1	ABBREVIATION 1
ADDRESS 2	TELEPHONE NUMBER 2	ABBREVIATION 2
ADDRESS 3	TELEPHONE NUMBER 3	ABBREVIATION 3
.	.	.
.	.	.
.	.	.
.	.	.
.	.	.

FIG. 10

Thomas Adams & Asso
AGENT FOR APPLICANT

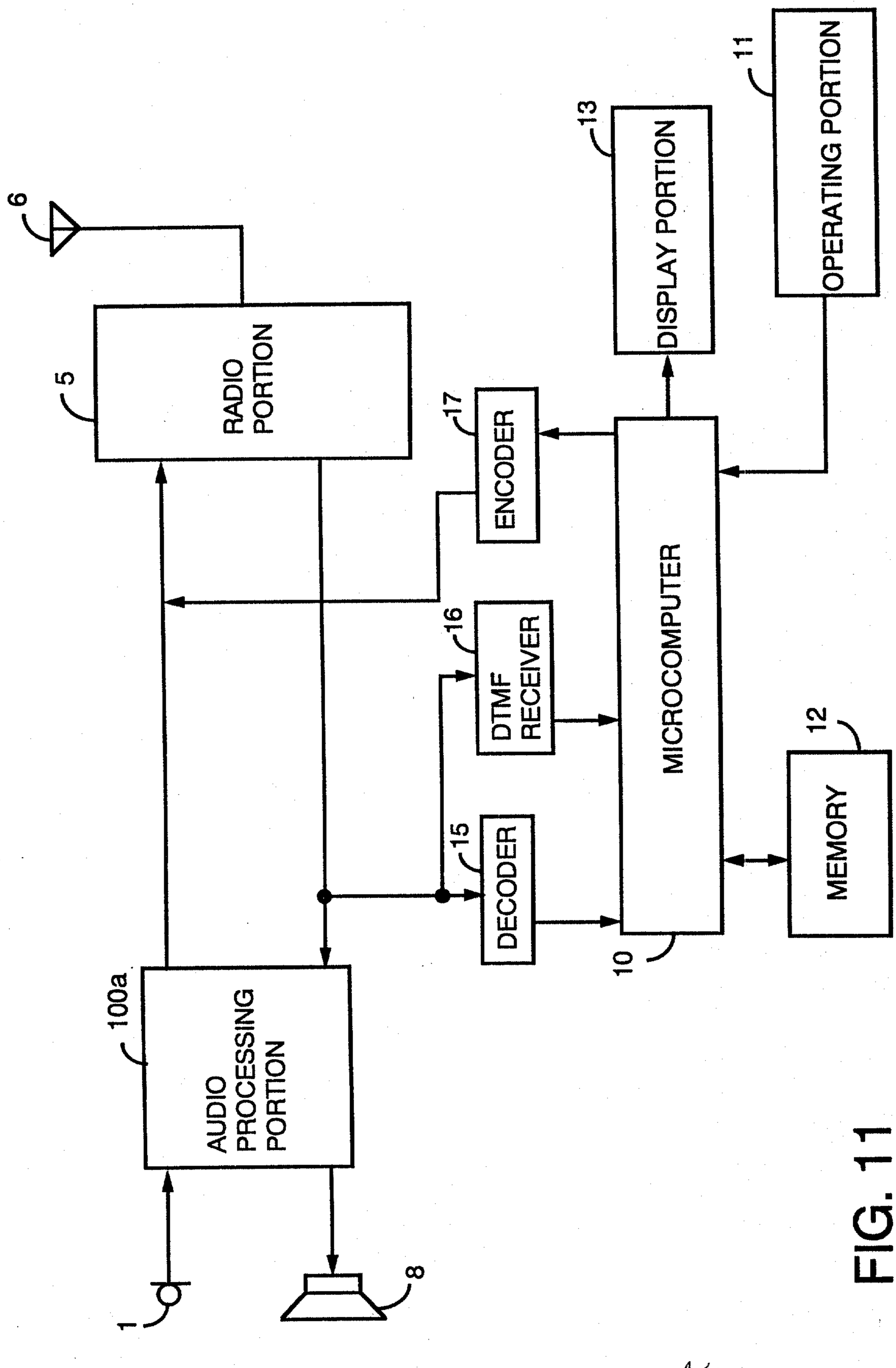

FIG. 11
(PRIOR ART)

Thomas Adams & Assn.
AGENT FOR APPLICANT

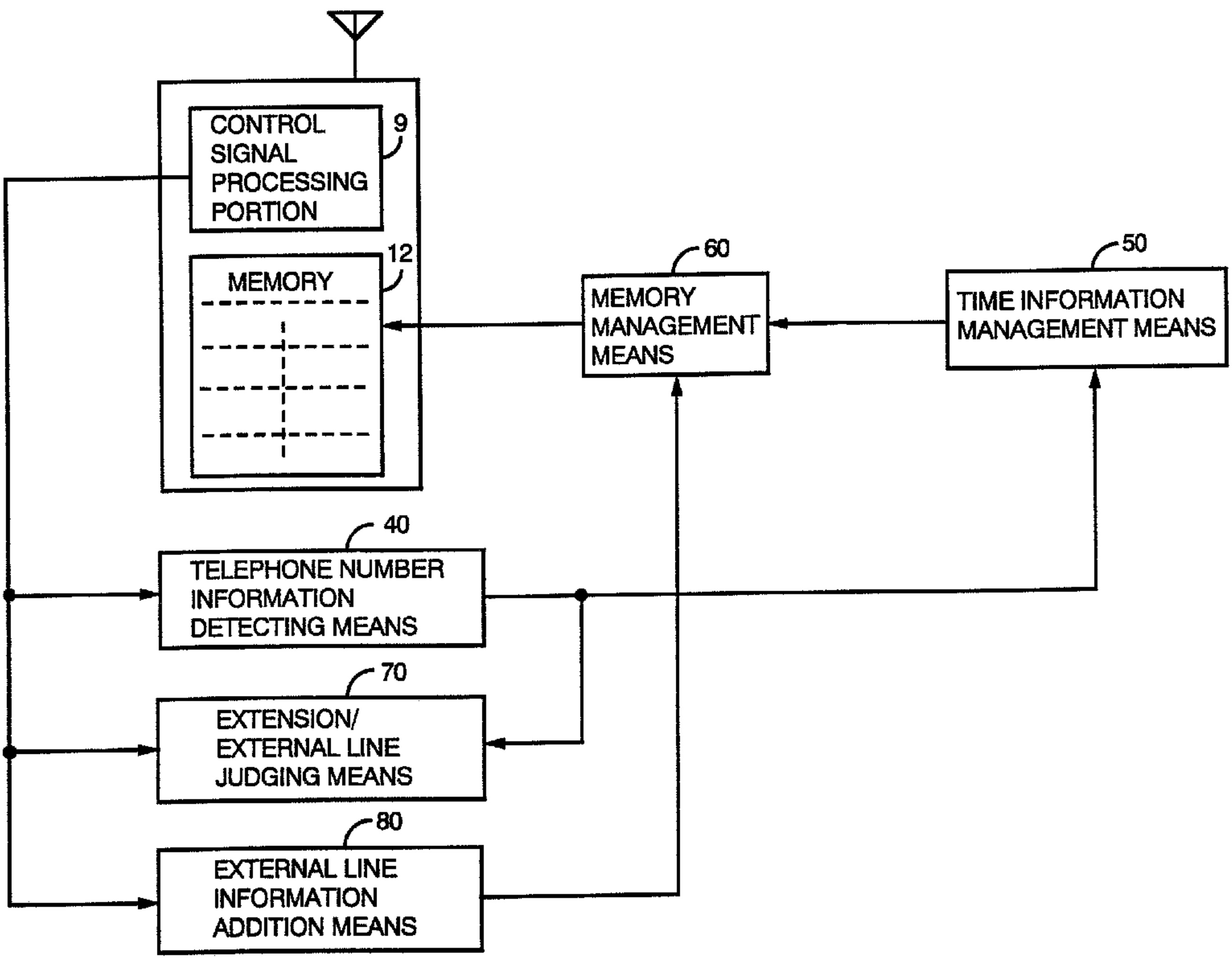
CONTROL SIGNAL PROCESSING PORTION
9
MEMORY
12
MEMORY MANAGEMENT MEANS
60
TIME INFORMATION MANAGEMENT MEANS
50
TELEPHONE NUMBER INFORMATION DETECTING MEANS
40
EXTENSION/ EXTERNAL LINE JUDGING MEANS
70
EXTERNAL LINE INFORMATION ADDITION MEANS
80