United States Patent

Lewus

[15] 3,644,810

[45] Feb. 22, 1972

[54] **SENSING AND CONTROL DEVICE FOR ELECTRIC MOTOR-STARTING CIRCUITS**

[72] Inventor: **Alexander J. Lewus,** 9844 North 11th Ave., Phoenix, Ariz. 85021

[22] Filed: **Jan. 20, 1971**

[21] Appl. No.: **108,029**

[52] **U.S. Cl.** .....**318/221 E,** 336/136

[51] **Int. Cl.** **H02p 1/42,** H01f 21/06

[58] **Field of Search** .....318/221 E, 227; 336/130, 132, 336/136

[56] **References Cited**

UNITED STATES PATENTS

3,226,620	12/1965	Elliott	318/221 E
3,376,484	4/1968	Lewus	318/221 E
3,573,579	4/1971	Lewus	318/221 E

Primary Examiner—Bernard A. Gilheany
Assistant Examiner—Thomas Langer
Attorney—Kinzer, Dorn & Zickert

[57] **ABSTRACT**

A versatile sensing transformer for actuating a semiconductor gate in the starting circuit of an electric motor, comprising a U-shaped magnetic base, inductive coupled primary and secondary windings mounted on the base in coaxial relation to each other and electrically connected to the motor and the semiconductor gate, an adjustable and removable magnetic core threaded into the base and projecting axially of the cores, and a magnetic cap bridging the open end of the base to form a complete magnetic shell, the cap being adjustable toward and away from the coils and core to vary the overall reluctance of the magnetic circuit.

6 Claims, 8 Drawing Figures

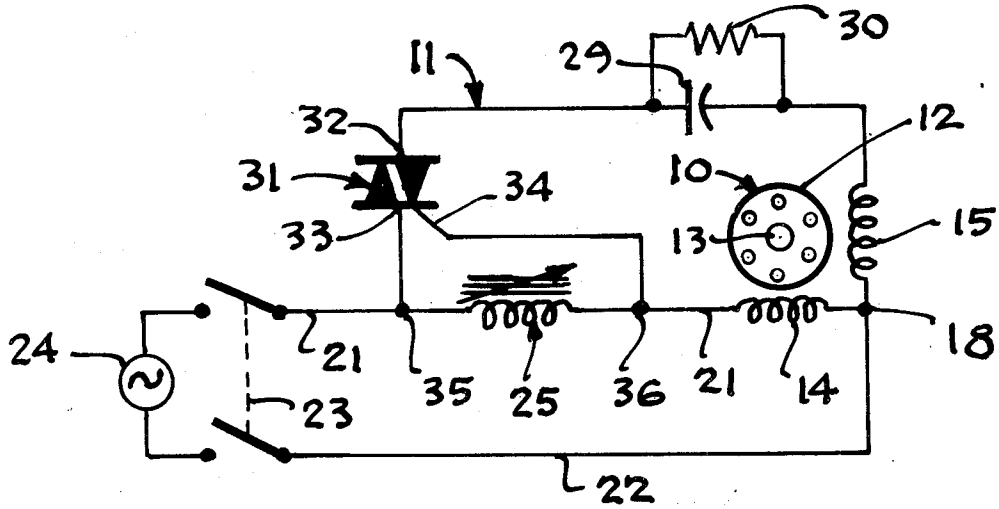

FIG. 1

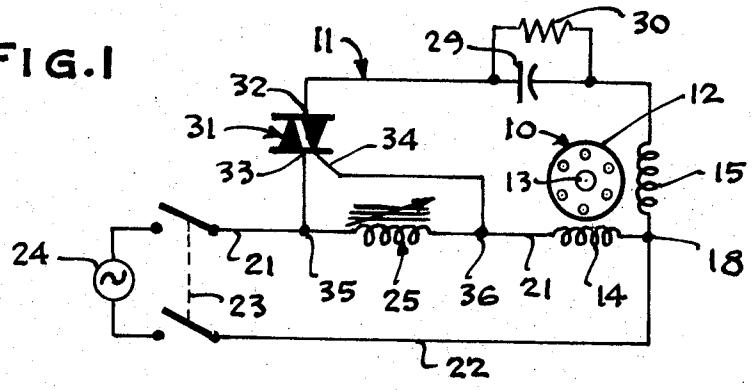

FIG. 2

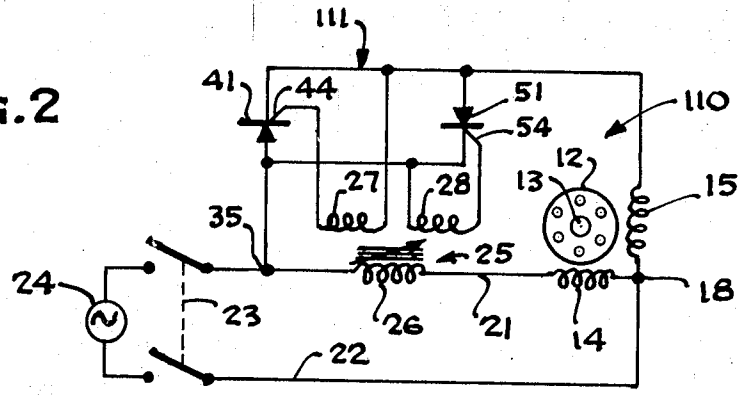

FIG. 4

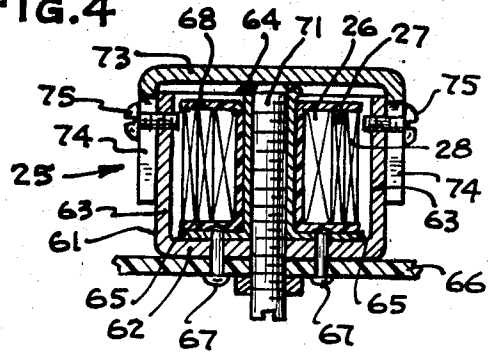

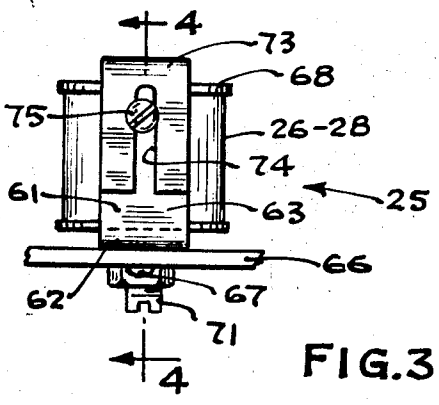

FIG. 3

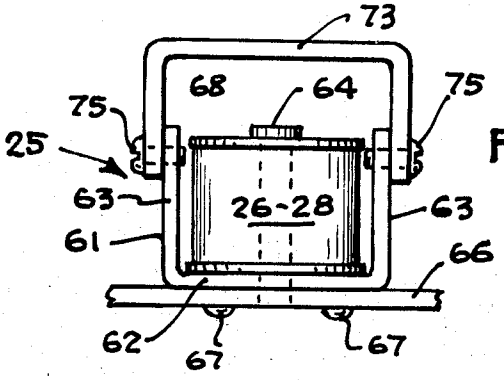

FIG. 5

Inventor
Alexander J. Lewus
By Kinzer, Dorn and Zickert
Attorneys

FIG. 6

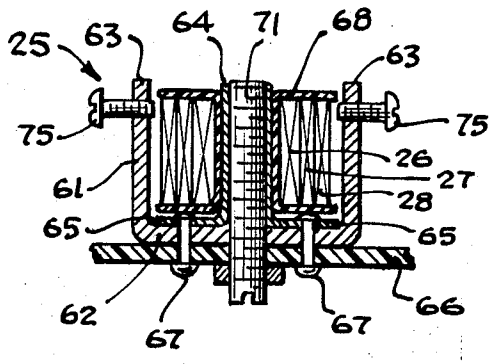

FIG. 8

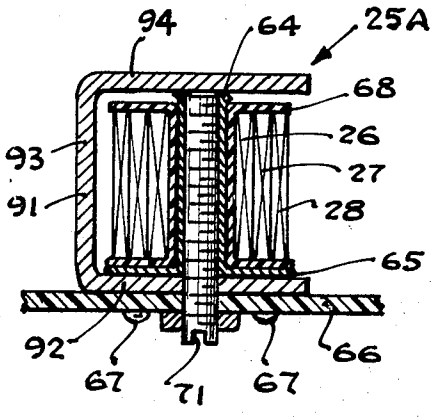

FIG. 7

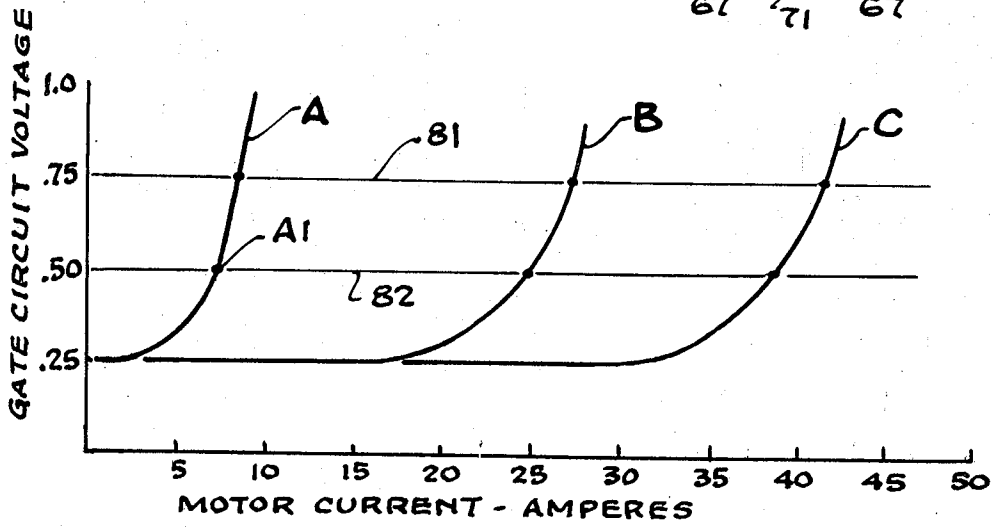

Inventor
Alexander J. Lewus
By Kinzer, Dorn and Zickert
Attorneys

SENSING AND CONTROL DEVICE FOR ELECTRIC MOTOR-STARTING CIRCUITS

BACKGROUND OF THE INVENTION

In the operation of a conventional single-phase electric motor, whether of the capacitor-start inductance-run, capacitor-start capacitor-run, or split-phase kinds, a frequent source of failure is the centrifugal switch ordinarily used to disconnect the starting winding of the motor as the motor approaches normal running speed. In a motor that starts and stops rather frequently, the switch or relay contacts may arc excessively and may deteriorate to a point at which the motor will not function, even though most of the motor structure is good for a much longer life. The switch may also accumulate dust and dirt, which may prevent effective starting or may tend to maintain the starting winding of the motor in circuit when it should be disconnected. The latter circumstance may lead to overheating with a subsequent reduction in the motor life.

In recent years, circuits have been developed for utilization of one or more semiconductor gates as the principal switching elements in the starting circuit of an electric motor. For example, in U.S. Pat. No. 3,116,445, switching is effected by two signal-controlled rectifiers connected in back-to-back relation in series in the starting winding circuit of the motor; the SCRs are actuated by signals from two sensing-windings inductively coupled to the main winding of the motor. Somewhat similar circuits are shown in U.S. Pat. Nos. 3,226,620 and 3,071,717. A more recent example of a single-phase motor control utilizing SCRs as the principal switching elements is U.S. Pat. No. 3,508,131 of A. J. Lewus, issued Apr. 21, 1970. It has also been proposed to use a unitary bidirectionally conductive semiconductor gate (triac, quadrac, etc.) as the principal switching element in an electric motor-starting circuit; a system of this kind is described and claimed in application Ser. No. 4,562 of A. J. Lewus, filed Jan. 21, 1970.

In any of these semiconductor gate control circuits for single-phase motors, there may be some difficulty in the maintenance of adequate sensitivity and accuracy of operation. There is a further problem in that the sensing apparatus used to actuate the semiconductor gate ordinarily requires special construction to fit each different motor size and each different semiconductor gate. Thus, although a given semiconductor gate device, such as an SCR or a triac, might be usable for several different motor sizes, it has been necessary to provide a specific sensing transformer or other sensing apparatus especially constructed for each different motor rating. To some extent, this has been overcome by adjustable-core sensing transformers, as disclosed in some of the foregoing Lewus patents, or by the movable core device shown in Lewus U.S. Pat. No. 3,376,484. In no instance, however, has the art provided a universally applicable sensing device that can be used with a broad variety of different semiconductor gates and over a wide range of different motor sizes and operating characteristics.

SUMMARY OF THE INVENTION

It is a principal object of the present invention, therefore, to provide a new and improved sensing and control device, for actuating a semiconductor gate in the starting circuit of an electric motor, that is applicable to and usable with a wide range of different motor ratings having substantial variations in their characteristics. It is a related object of the invention to provide a new and improved sensing and control device, for actuating a semiconductor gate in the starting circuit of an electric motor, that can be employed effectively with a broad range of different semiconductor gate devices having varying electrical characteristics and capabilities.

Another object of the invention is to provide a precise sensing and control device for actuating a semiconductor gate in the starting circuit of an electric motor that is adjustable to close tolerances and that is effective to afford optimum starting, pull-in, and breakdown torques for any given combination of motor and semiconductor gate.

A specific object of the invention is to provide a new and improved sensing and control device for actuating a semiconductor gate in the starting circuit of an electric motor, which is capable of functioning as a sensing transformer or as a sensing inductance, and which can be adjusted over a range of operating conditions from one in which the device affords a complete closed magnetic loop to one in which the device functions with a minimal magnetic loop.

Accordingly, the invention relates to a sensing and control device for actuating a semiconductor gate between conductive and nonconductive conditions, in the starting circuit of an electric motor, the semiconductor gate being connected in series with the starting winding of the motor. The sensing and control device of the invention comprises a first magnetic shell member of low-reluctance high-permeability material having a base and a side normal to the base. A primary coil is mounted on the first shell member with the coil axis parallel to the side of the shell member; this primary coil is adapted to carry full line current for the running winding of the electric motor. At least one secondary coil is mounted in coaxial relation to the primary coil and is inductively coupled thereto; the secondary coil is adapted to develop a gate signal indicative of the instantaneous current in the running winding of the motor. A magnetic core member of low-reluctance high-permeability material is removably mounted on the base of the first shell member in coaxial relation to the aforementioned coils; the core is adjustable in an axial direction to vary the coupling between the coils. A second magnetic shell member is removably mounted on the first shell member and projects from the side of the first shell member across the end of the core remote from the first shell member base, this second shell member being adjustable in a direction parallel to the axis of the coils to vary the total effective reluctance of the magnetic circuit which links the coils.

BRIEF DESCRIPTION OF THE DRAWINGS

FIG. 1 is a schematic diagram of one electric motor-starting circuit in which the sensing and control device of the present invention may be employed;

FIG. 2 is a schematic diagram of another and substantially different motor-starting circuit in which the sensing and control device of the invention may be utilized;

FIG. 3 is an end elevation view of a sensing and control device constructed in accordance with one embodiment of the present invention;

FIG. 4 is a sectional elevation view taken approximately along line 4—4 in FIG. 3;

FIG. 5 is a side elevation view of the sensing and control device adjusted for a different operating condition;

FIG. 6 is a sectional view similar to FIG. 4 but with the device adjusted for a substantially different operating condition; and

FIG. 7 is a chart of certain operating characteristics of the starting circuits using the device; and

FIG. 8 is a sectional view of another embodiment.

DESCRIPTION OF THE PREFERRED EMBODIMENT

FIG. 1 illustrates, in schematic form, a capacitor-start induction-run motor 10 having a starting circuit 11 of the kind in which the sensing and control device of the present invention may be employed. Motor 10 includes the usual armature 12 mounted upon a shaft 13; armature 12 may be of the wound rotor-type or may comprise a conventional squirrel cage rotor. The particular construction employed is not critical to the present invention. Motor 10 further includes the usual field windings, comprising a running winding 14 and a starting winding 15. The motor windings 14 and 15 are connected together at a terminal 18. In a dual-voltage motor, running winding 14 may comprise two sections connectable in series or parallel to fit the available supply.

The main winding 14 of motor 10 is connected by two conductors 21 and 22 and by a starting switch 23 to a single-phase

power supply 24. Power supply 24 may constitute any conventional AC power supply. It will be recognized that the power circuit for motor 10 may include suitable overload protection. Moreover, the illustrated manually operable starting switch 23 may be replaced by a suitable electrically operated contactor or other conventional motor starting switch as desired.

The starting circuit 11 for motor 10, as illustrated in FIG. 1, comprises a sensing device 25 shown as an inductance coil connected in series with the conductor 21 that connects the AC supply 24 to the main running winding 14 of motor 10. The function of the sensing and control device 25, which is described in detail hereinafter, is to develop a control signal that is proportional to the amplitude of current in powerline 21 and hence representative of the load current to the main winding 14 of motor 10. Device 25 is shown as having an adjustable iron core; in actuality, the magnetic circuit of the sensing and control device affords an even greater degree of flexibility and versatility as described hereinafter.

The starting circuit 11 for motor 10, as shown in FIG. 1, comprises a triac, quadrac, or other bidirectionally conductive semiconductor gate 31 having input and output electrodes 32 and 33 and a gate electrode 34. Electrode 33 is connected to conductor 21 at a terminal 35 on the side of sensing device 25 adjacent switch 23. Gate electrode 34 is connected to conductor 21 at a terminal 36 on the other side of sensing device 25. Electrode 32 of semiconductor gate 31 is connected to a starting capacitor 29 that is in turn connected to starting winding 15. A resistor 30 may be connected in parallel with capacitor 29.

To start motor 10, switch 23 is closed, connecting the main motor winding 14 across the AC supply 24. The initial inrush of starting current through the sensing inductance 25 develops a control signal, constituting a voltage drop across terminals 35 and 36, of sufficient amplitude to trigger the semiconductor gate 31 to conduction. As motor 10 approaches running speed, the current to the running winding 14 progressively reduces. When the current to the running winding drops below a given threshold value, the amplitude of the control signal developed across terminals 35 and 36 falls below that required to maintain gate device 31 in conduction. Accordingly, the gate device goes nonconductive and the starting winding 15 is cut out of the motor circuit.

During subsequent motor operation, excessive load conditions may again cause an increase in the current to winding 14 sufficient to develop a control signal between terminals 35 and 36 that will trigger the semiconductor gate 31 to conduction. Under these circumstances, the starting winding 15 is again connected in the operating circuit of the motor and remains in operation until the load current to winding 14 again drops below the threshold amplitude required to enable the sensing device 25 to trigger gate device 31. In this manner, the semiconductor gate 31 is actuated between conductive and nonconductive conditions by device 25 in controlling the starting circuit of electric motor 10.

FIG. 2 illustrates a split phase motor 110, generally similar to motor 10, comprising a rotor 12 mounted upon a shaft 13 and associated with a running winding 14 and a starting winding 15. As before, the motor windings are connected together at a terminal 18. The running winding 14 is connected to the power supply 24 by means of two power lines 21 and 22 and a starting switch 23.

In the control circuit 111 of FIG. 2, the sensing and control device 25 is shown in somewhat greater detail; it comprises a primary coil 26 in series with powerline 21 and inductively coupled to two secondary coils 27 and 28. Secondary coil 27 has one terminal connected to the starting winding 15 of motor 110 and the other terminal connected to the gate electrode 44 of a signal controlled rectifier 41 that is connected in series between terminal 35 and the starting winding. The other secondary coil 28 has one terminal connected to powerline terminal 35 with the other coil terminal being connected to the gate electrode 54 of a second SCR 51. The cathode and anode of SCR 51 are connected in series from the starting winding 15 of the motor to powerline terminal 35. It can be seen that the two semiconductor gates 41 and 51 are connected in opposed polarity in the starting circuit of motor 110. The operation of circuit 111 is essentially similar to starting control circuit 11; the SCR gates 41 and 51 are actuated between conductive and nonconductive states by signals supplied thereto from sensing and control device 25.

FIGS. 3 through 6 illustrate the sensing and control device 25 of the present invention in substantial detail. Device 25 comprises a first magnetic shell member 61 formed of low-reluctance high-permeability magnetic material. Shell member 61 is of U-shaped configuration and includes a base 62 and two vertically projecting sides 63. A hollow vertical guide member 64 is centrally located within shell member 61, projecting upwardly from base 62 in a direction parallel to the two sides 63. Guide 64 is formed of brass or other appropriate nonmagnetic material. The lower part of guide member 64 includes two horizontally extending lugs 65. The guide member and shell member 61 are mounted together on an insulator support 66 by suitable means such as a pair of rivets 67.

In the central portion of shell member 61, a coil form 68 is mounted in concentric relation to guide 64. The primary coil 26 is wound around the central portion of the coil form 68 and the two secondary coils 27 and 28 are wound on the coil form in encompassing relation to the primary coil 26. Primary coil 26 is wound with wire of a size suitable to carry full line current for the running winding of the electric motor of maximum size with which device 25 is to be utilized. For example, in a device 25 intended for use with single-phase motors ranging from one-eighth horsepower to 2 horsepower, the primary winding 26 may comprise 40 turns of No. 15 wire. In this same sensing and control device, the two secondary coils 27 and 28 are formed with No. 28 wire, 80 turns per coil. These particular windings are suitable for the motor range given above, in either capacitor start or split-phase motors.

A magnetic core 71 is threaded into a tapped central aperture in the base 62 of shell member 61 and projects upwardly through guide 64 in coaxial relation to coils 26–28. Core 71 is adjustable in an axial direction to vary the coupling between the coils 26–28. Furthermore, core 71 is readily removable from the assembly (see FIG. 5).

The sensing and control device 25 further comprises a second magnetic shell member 73 that projects across the space between the sides 63 of the first shell member 61. The second shell member 73 is also U-shaped in configuration and fits over shell member 61. Shell member 73 has two elongated slots 74 in its end portions, through which two retainer screws 75 project. Each of the screws 75 is threaded into a tapped opening in one of the legs 63 of the first shell member 61. By loosening the screws 75, the second or upper shell member 73 can be adjusted from the position shown in FIG. 4, in which shell member 73 is aligned with the top of guide 64 and can be engaged by core 71, and the position shown in FIG. 5, in which the shell member 73 is displaced from the guide member 64 and core 71 by a substantial distance. Moreover, the second shell member 73 can be completely removed from the assembly as shown in FIG. 6.

In considering the operation of the sensing and control device 25, the operating characteristics illustrated in FIG. 7 may be helpful. In FIG. 7, the voltages required for actuation of the gate circuits of the two SCRs in the circuit of FIG. 2 are plotted as functions of motor current. The initial curve A illustrates the desired characteristics for a one-eighth horsepower 115-volt motor. As shown therein, the motor starting or locked rotor maximum current in the running winding circuit is of the order of 8 amperes. As indicated at A1, the motor starts at a current in the running winding of about 7.5 amperes. The conduction range is adjusted so that the semiconductor gates 41 and 51 are rendered conductive and nonconductive in the region between the lines 81 and 82, affording a precise control for operation of the motor and also providing optimum starting, pull-in, and breakdown torque characteristics.

In FIG. 7, curve B shows the requisite operating characteristics for a 1 horsepower 230-volt motor. This substantially different operating characteristic is achieved, in the sensing and control device **25**, by readjusting core **71** and, if necessary, shell member **73**. Thus, for the small motor having the operating characteristic of curve A, device **25** is adjusted to the condition shown in FIG. **4** with core **71** fully advanced and preferably in engagement with the upper shell member **73**, providing a minimum reluctance magnetic circuit for coils **26–28**. The modification to achieve the operating characteristic of curve B is effected by retracting core **71** to incorporate a substantial airgap in the magnetic circuit, by raising shell member **73** relative to shell member **63**, or by a combination of both of these expedients. The same means are utilized to adjust the magnetic circuit for even greater reluctance for a larger motor as, for example, a motor having characteristics corresponding to curve C for a 2 horsepower 230-volt capacitor start motor.

With these adjustments, uniform gate circuit trigger voltages and currents can be obtained for virtually any given low- and high-current points, within a small ampere range. Consequently, the sensing and control device **25** may be utilized with a wide variety of different motor sizes controlled by semiconductor gate devices having substantially different gate current demands. There is no necessity for a separate specific sensing device for any given motor or any given semiconductor gate.

Device **25** is utilized in some instances as a sensing transformer, as in the circuit of FIG. **2**; in other instances it may be employed, using only one coil, as a sensing inductance in an arrangement like that of FIG. **1**. In either case, the inherent versatility of the sensing device construction allows effective and convenient use without requiring structural modification of the sensing device, other than its built-in adjustments.

FIG. **8** illustrates a sensing and control device **25A** comprising another embodiment of the present invention. Device **25A** comprises a substantially C-shaped magnetic shell **91** formed of low-reluctance high-permeability magnetic material comprising a base **92**, a vertical side member **93**, and a top **94** that extends parallel to base **92**. As in the previous construction, a hollow vertical guide member **64** is centrally located within shell **91**, projecting upwardly from base **92** parallel to the shell side **93**, the guide being formed of brass or other suitable nonmagnetic material. The lower part of guide **64** includes two horizontally extending lugs **65**. As before, guide member **64** and the shell **91** are mounted together on an insulator support **66** by suitable means such as rivets **67**.

Within shell **91**, the primary coil **26** and secondary coils **27** and **28** are mounted upon guide member **64**, preferably upon a plastic, paper, or other insulator coil form **68**. As in the previous embodiment, primary coil **26** is wound with wire capable of carrying full line current for the running winding of an electric motor of maximum size with which device **25A** is to be employed. The secondary coils **27** and **28** are formed with smaller wire. An adjustable and removable magnetic core **71** is threaded into a tapped central aperture in the base **92** of shell **91** and projects upwardly through guide **64** in coaxial relation to coils **26–28**.

The operation of device **25A** is essentially the same as for device **25** in most respects. Core **71** is utilized to adjust the reluctance of the magnetic circuit for the coils **26–28**. For a minimum reluctance, core **71** is advanced into engagement with the upper portion **94** of shell **91**, providing a complete magnetic loop for the coils. The reluctance of the magnetic circuit is increased, and the coupling between the coils is decreased, by retracting core **71**. The maximum reluctance is achieved by removing the core entirely.

I claim:

1. A sensing and control device for actuating a semiconductor gate between conductive and nonconductive conditions in the starting circuit of an electric motor, said semiconductor gate being connected in series with a starting winding for said motor, said device comprising:

a first magnetic shell member of low-reluctance high-permeability material having a base and a side normal to said base;

a primary coil, mounted on said first shell member with the coil axis parallel to said side, adapted to carry full line current for the running winding of said electric motor;

at least one secondary coil, mounted in coaxial relation to said primary coil and inductively coupled thereto, adapted to develop a gate signal indicative of the instantaneous current in the running winding of said motor;

a magnetic core member of low-reluctance high-permeability material, removably mounted on said base of said first shell member in coaxial relation to said coils and adjustable in an axial direction to vary the coupling between said coils;

and a second magnetic shell member, removably mounted on said first shell member and projecting from said side of said first shell member toward the end of said core remote from said base, said second shell member being adjustable in a direction parallel to the axis of said coils, relative to said first shell member, to vary the total effective reluctance of the magnetic circuit linking said primary and secondary coils.

2. A sensing and control device for an electric motor-starting circuit, according to claim **1**, in which said first shell member is of U-shaped configuration, including a base and two sides, and in which said coils and core are aligned with the center of said base.

3. A sensing and control device for an electric motor starting circuit, according to claim **2**, in which said second shell member is also of U-shaped configuration, bridging the open end of said first shell member, with the sides of the two shell members engaging each other.

4. A sensing and control device for an electric motor-starting circuit, according to claim **3**, in which adjacent sides of said shell members are interconnected by a setscrew threaded into the side of one shell and extending through an elongated slot in the other shell.

5. A sensing and control device for an electric motor starting circuit, according to claim **1**, and further comprising a hollow nonmagnetic guide affixed to said base, said coils being mounted in coaxial encompassing relation to said guide and said core projecting axially through said guide.

6. A sensing and control device for actuating a semiconductor gate between conductive and nonconductive conditions in the starting circuit of an electric motor, said semiconductor gate being connected in series with a starting winding for said motor, said device comprising:

a magnetic shell, of low-reluctance high-permeability material, of C-shaped configuration having a base, a side normal to said base, and a top extending back parallel to said base;

a primary coil, mounted on said base of said shell with the coil axis parallel to said side, adapted to carry full line current for the running winding of said electric motor;

at least one secondary coil, mounted in coaxial relation to said primary coil and inductively coupled thereto, adapted to develop a gate signal indicative of the instantaneous current in the running winding of said motor;

and a magnetic core member of low-reluctance high-permeability material, removably mounted on said base of said shell in coaxial relation to said coils and adjustable in an axial direction toward and away from the top of said shell to vary the coupling between said coils.

* * * * *