US 20020006583A1

(19) United States

(12) Patent Application Publication (10) Pub. No.: US 2002/0006583 A1

Michiels et al. (43) Pub. Date: Jan. 17, 2002

(54) STRUCTURES, LITHOGRAPHIC MASK FORMING SOLUTIONS, MASK FORMING METHODS, FIELD EMISSION DISPLAY EMITTER MASK FORMING METHODS, AND METHODS OF FORMING PLURAL FIELD EMISSION DISPLAY EMITTERS

(76) Inventors: **John Michiels**, Boise, ID (US); **David Wells**, Boise, ID (US); **Eric J. Knappenberger**, Meridian, ID (US); **James J. Alwan**, Boise, ID (US)

Correspondence Address:
WELLS ST JOHN ROBERTS GREGORY AND MATKIN
SUITE 1300
601 W FIRST AVENUE
SPOKANE, WA 992013828

(21) Appl. No.: **09/947,648**

(22) Filed: **Sep. 5, 2001**

Related U.S. Application Data

(62) Division of application No. 09/458,758, filed on Dec. 10, 1999, which is a division of application No. 09/141,809, filed on Aug. 28, 1998, now Pat. No. 6,228,538.

Publication Classification

(51) **Int. Cl.**[7] **G03C 5/00**

(52) **U.S. Cl.** **430/312**; 430/313

(57) **ABSTRACT**

The present invention includes structures, lithographic mask forming solutions, mask forming methods, field emission display emitter mask forming methods, and methods of forming plural field emission display emitters. One aspect of the present invention provides a mask forming method including forming a masking layer over a surface of a substrate; screen printing plural masking particles over a surface of the masking layer; and removing at least portions of the masking layer using the masking particles as a mask. Another aspect of the present invention provides a method of forming plural field emission display emitters. This method includes forming a masking layer over an emitter substrate; screen printing a plurality of masking particles over the masking layer; removing portions of the masking layer intermediate the screen printed masking particles to form a plurality of masking elements; removing the masking particles from the masking elements; and removing portions of the emitter substrate to form plural emitters.

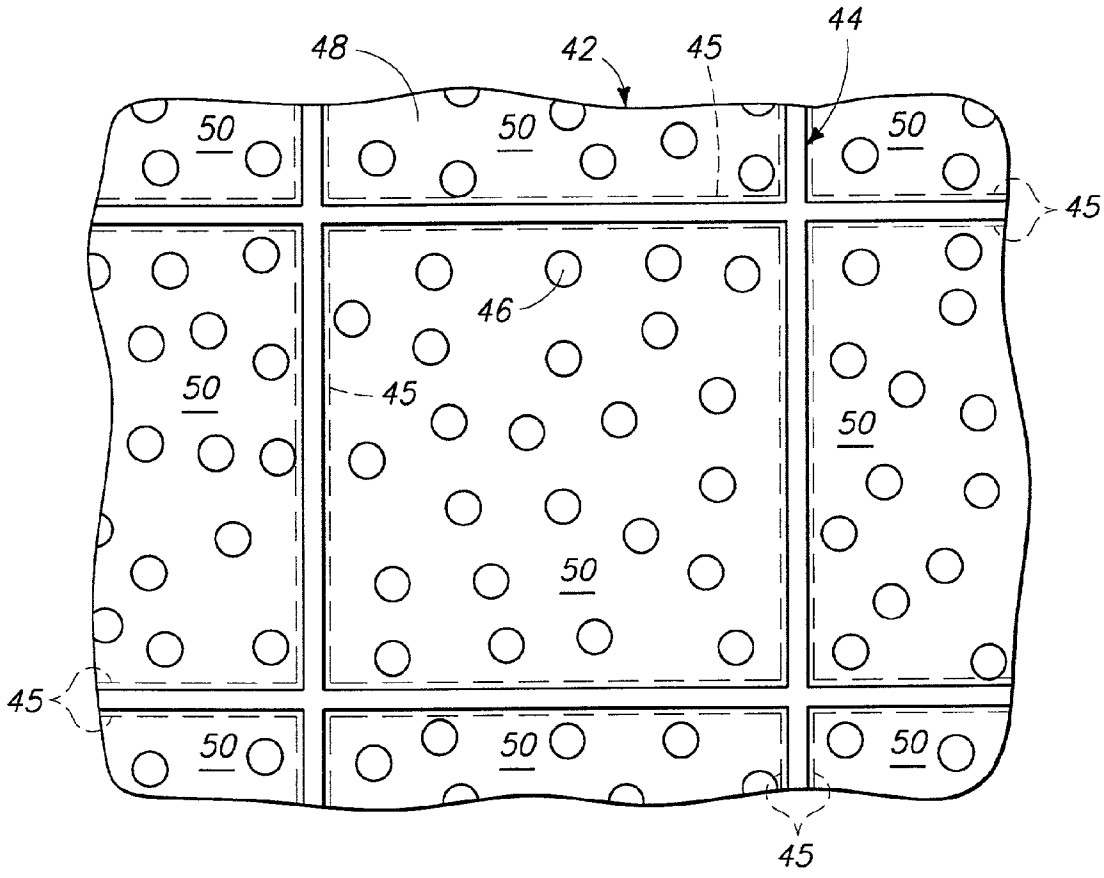

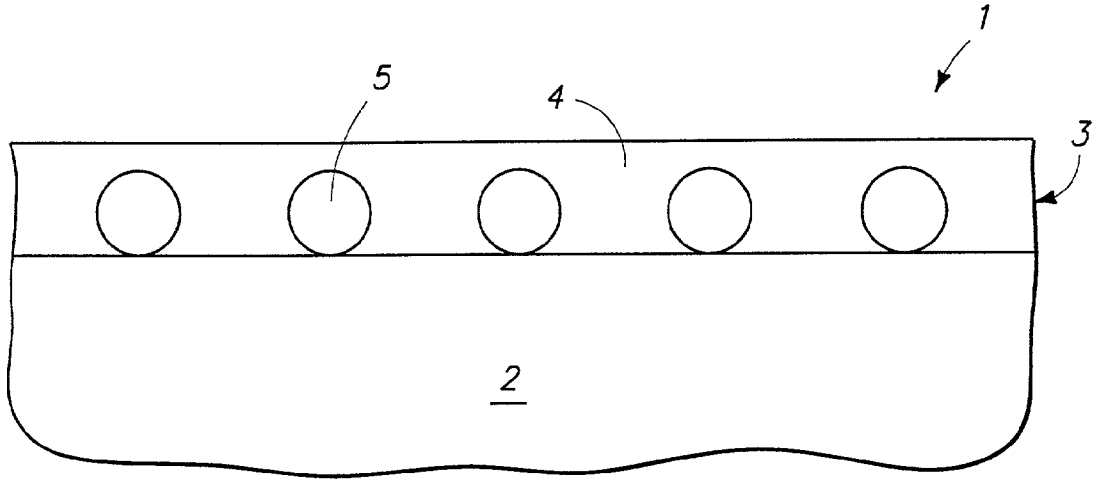

Фиг 1

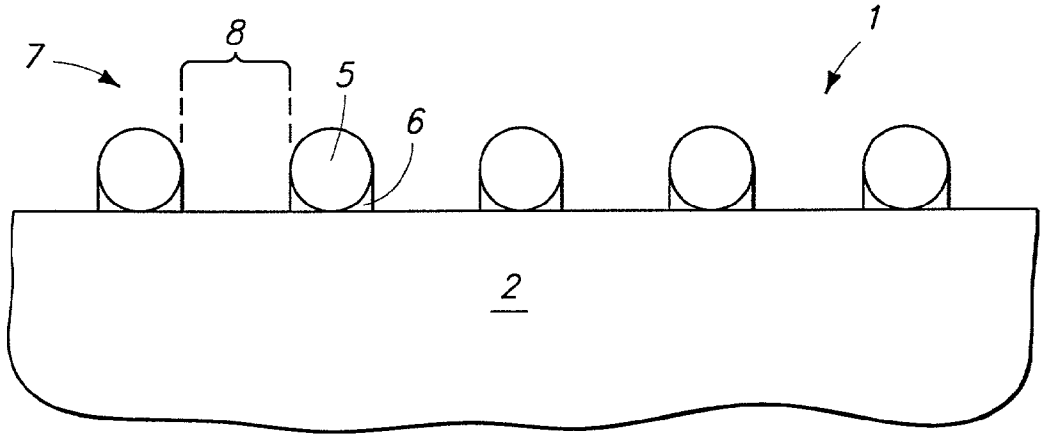

Фиг 2

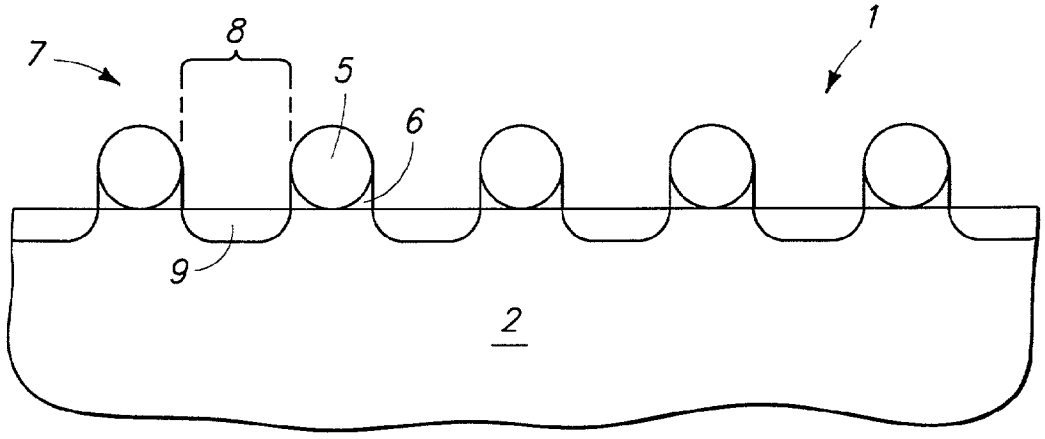

Фиг 3

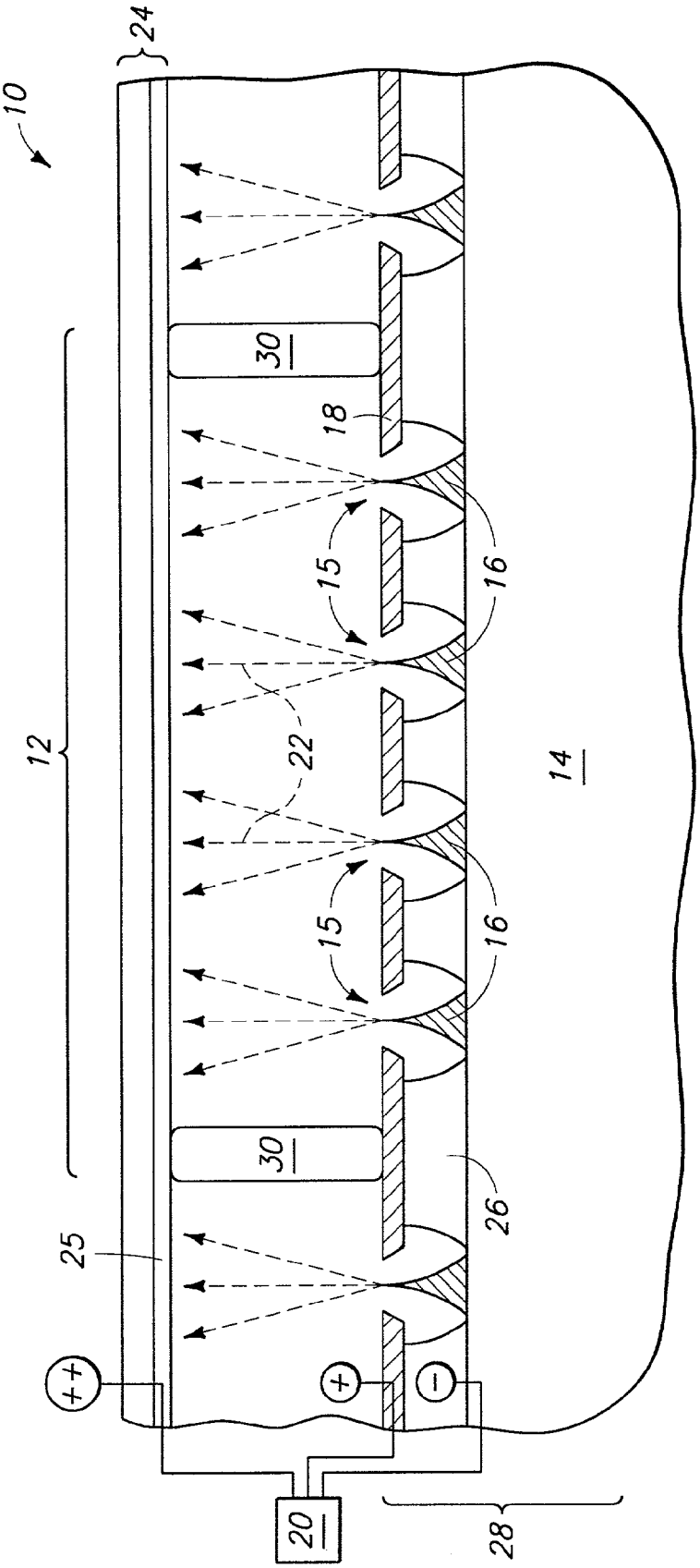

Fig 4

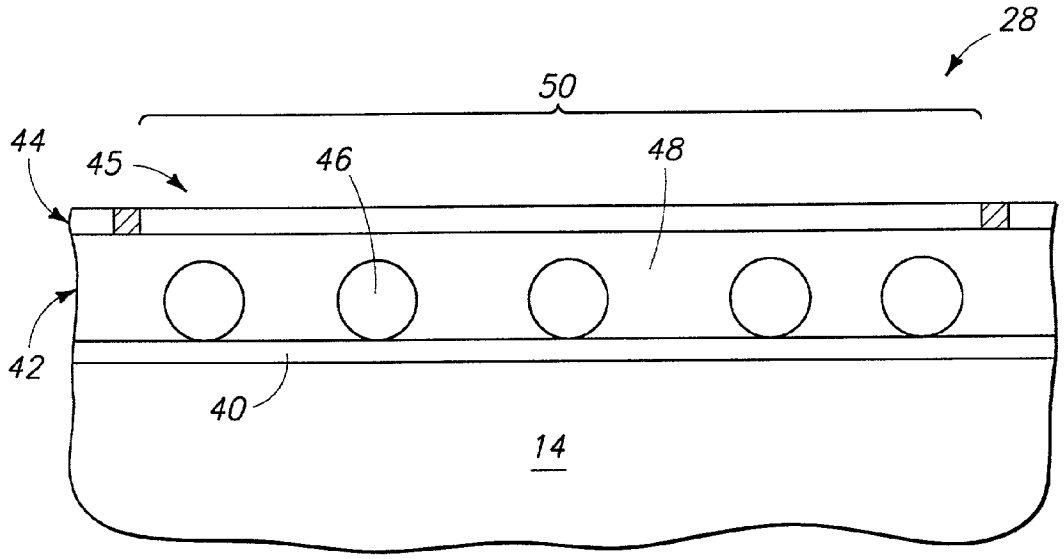

Fig 5

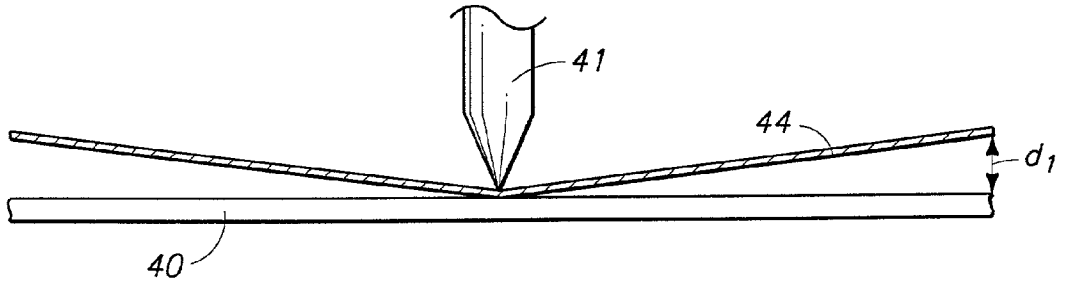

Fig 6

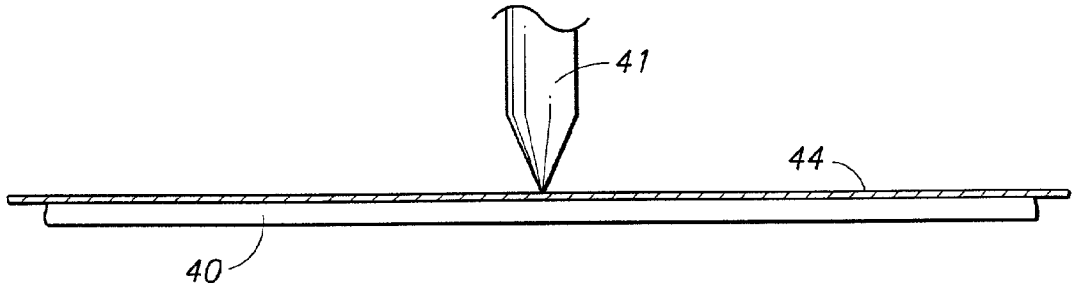

Fig. 7

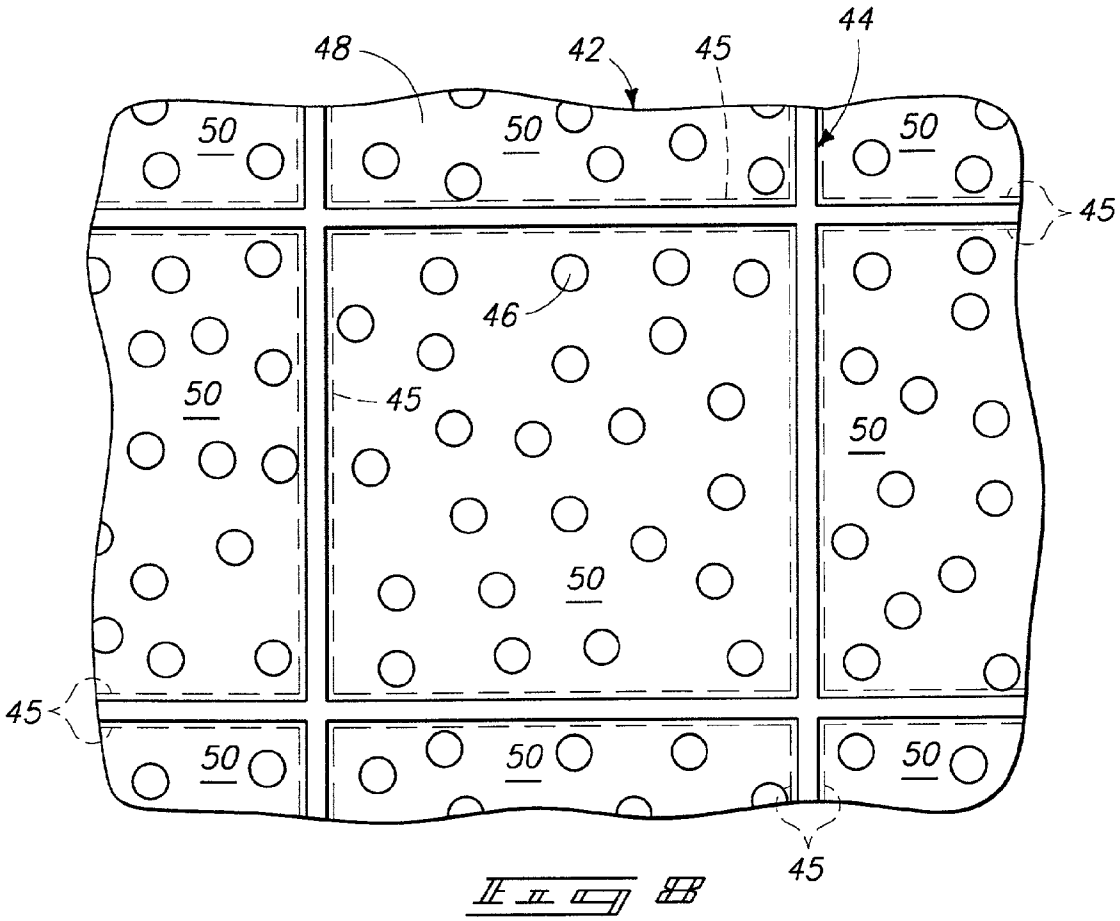

Fig. 8

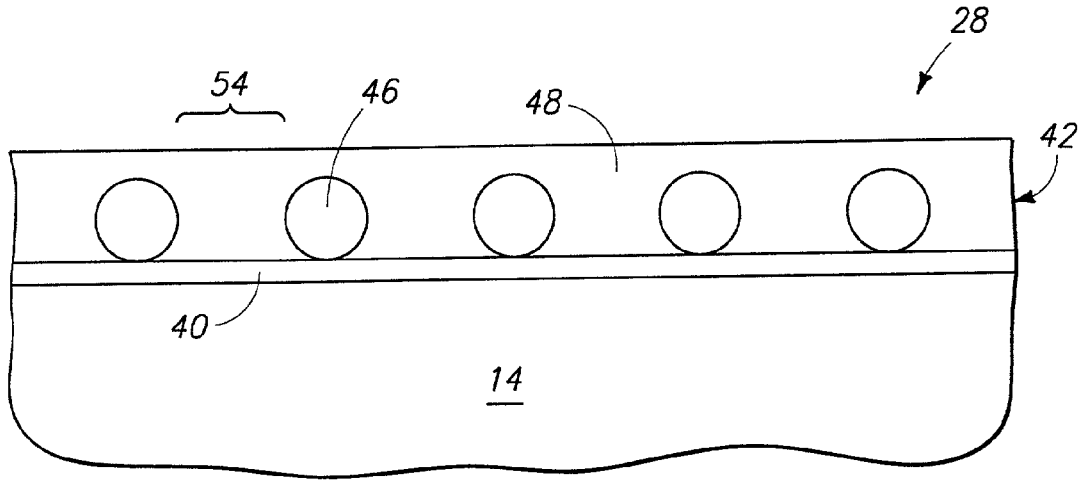

Fig. 9

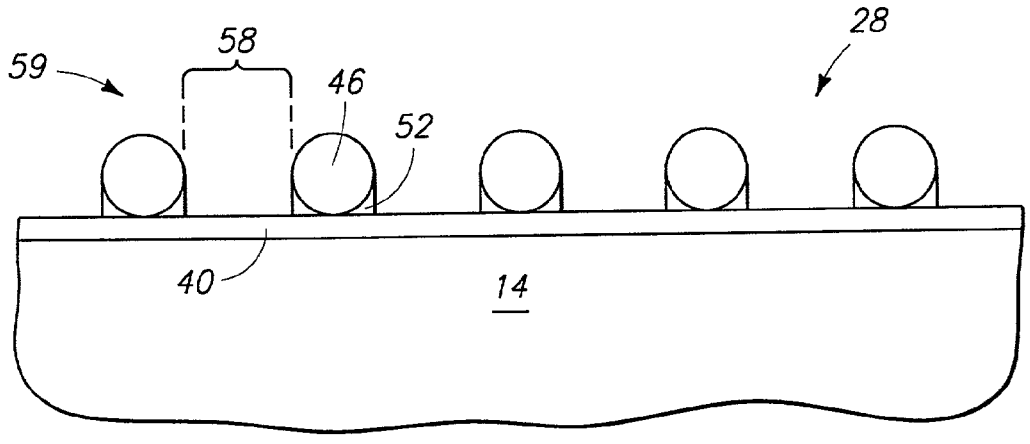

Fig. 10

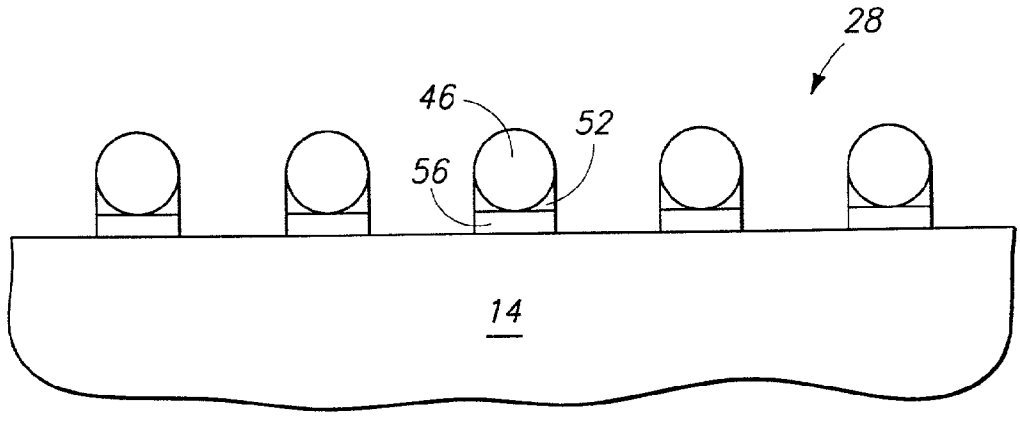

Fig. 11

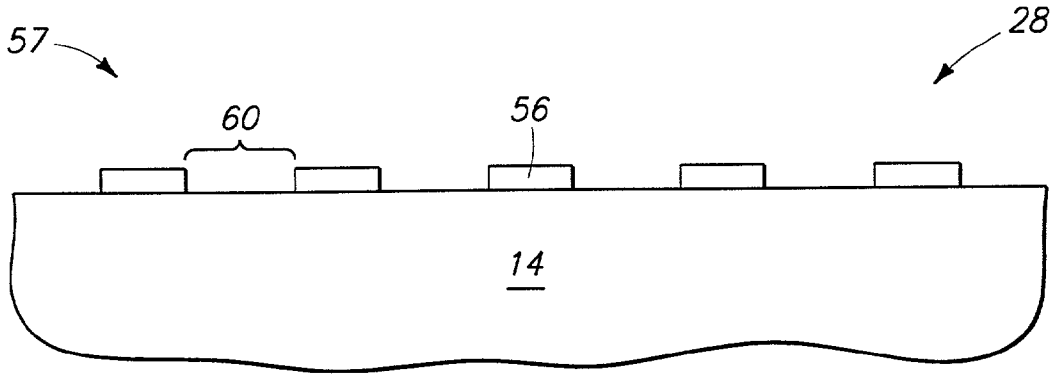

Fig. 12

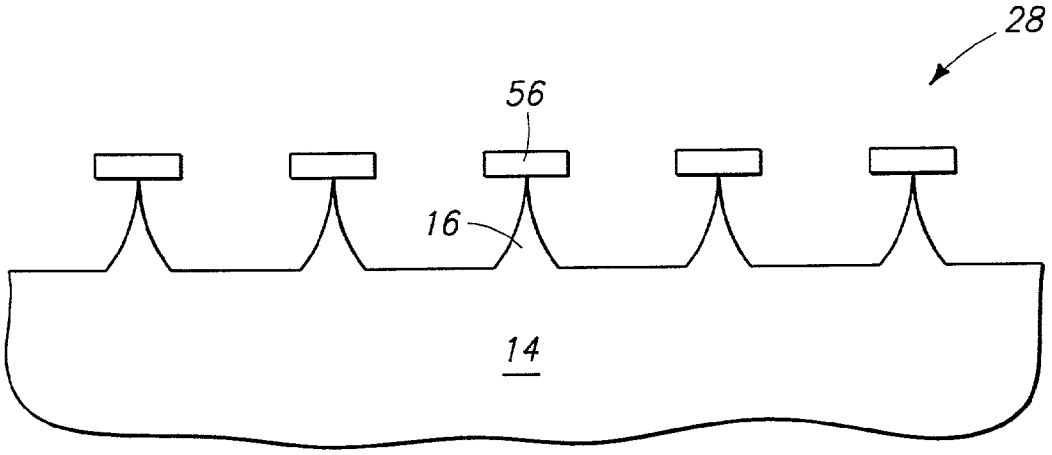

Fig. 13

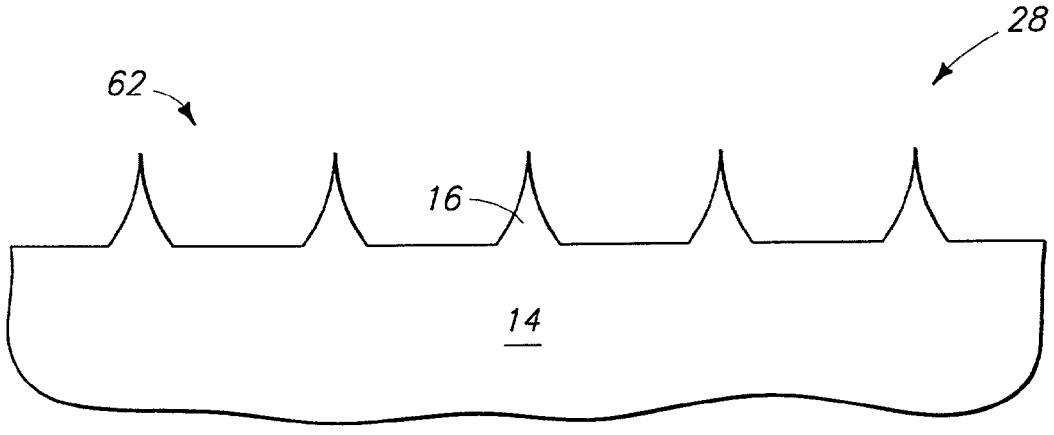

Fig. 14

STRUCTURES, LITHOGRAPHIC MASK FORMING SOLUTIONS, MASK FORMING METHODS, FIELD EMISSION DISPLAY EMITTER MASK FORMING METHODS, AND METHODS OF FORMING PLURAL FIELD EMISSION DISPLAY EMITTERS

PATENT RIGHTS STATEMENT

[0001] This invention was made with Government support under Contract No. DABT63-97-C-0001 awarded by Advanced Research Projects Agency (ARPA). The Government has certain rights in this invention.

TECHNICAL FIELD

[0002] The present invention relates to structures, lithographic mask forming solutions, mask forming methods, field emission display emitter mask forming methods, and methods of forming plural field emission display emitters.

BACKGROUND OF THE INVENTION

[0003] Field emission displays are utilized in a variety of display applications. Conventional field emission displays include a cathode plate having a series of emitter tips fabricated thereon. The tips are configured to emit electrons toward a phosphor screen to produce an image. The emitters or emitter tips are typically formed from an emitter material such as conductive polysilicon, molybdenum, or aluminum. Multiple emitters are typically utilized to excite a single pixel. For example, 120 emitters may be used for a single pixel. Individual pixels contain a deposited one of red, green, or blue phosphor.

[0004] One method of fabrication of emitter tips is described in U.S. Pat. No. 5,391,259 (the '259 patent); assigned to the assignee hereof and incorporated by reference. A hardmask layer is formed over emitter material in the disclosed fabrication method. Portions of the hardmask layer are selectively removed to form a hardmask utilized for emitter fabrication. One conventional method utilizes photolithography and etching to selectively remove portions of the hardmask layer. Following the formation of the hardmask, the emitter material is etched isotropically to form the tips. For proper fabrication, it is highly desired that hardmasks be patterned to a consistent critical dimension. Variations in critical dimensions or size of the hardmasks can result in non-uniformity within the formed emitter tips.

[0005] One method for fabricating the hardmask utilized to form the emitter tips uses spheres or beads as the mask for creating the hardmask layer mask. The spheres are provided in a liquid medium such as water. The emitter substrate is dipped into a vat of solution containing the spheres. The substrate is then withdrawn from the solution and some of the spheres adhere to the emitter substrate.

[0006] It is preferred to achieve a homogeneous/uniform distribution of beads upon the face of the emitter material. However, homogeneous distribution has been difficult to achieve. A non-uniform distribution of beads can result in adjacent spheres touching and subsequent adjoining of emitter tips following emitter fabrication causing problems with electron optics (e.g., focusing of electrons). Such joining of emitter tips can result in the emission of electrons which strike adjacent phosphor patches resulting in poor color intensity and poor color distribution.

[0007] Further, the spheres may exhibit poor adhesion to the surface of the substrate when conventional methods of applying the spheres to the substrate surface are utilized. This drawback is particularly acute if the spheres are larger than 0.5 microns.

[0008] The present invention provides improvements in device fabrication while avoiding problems experienced in the prior art.

SUMMARY OF THE INVENTION

[0009] The present invention includes structures, lithographic mask forming solutions, and mask forming methods. The invention further includes field emission display emitter mask forming methods and methods of forming plural field emission display emitters.

[0010] One aspect of the present invention provides a lithographic mask forming solution. The solution includes a photosensitive material and a plurality of masking particles within the photosensitive material. The photosensitive material comprises photoresist and the masking particles comprise beads or spheres in exemplary embodiments. The photosensitive material is cured and portions of the cured photosensitive material are removed in preferred aspects of the invention. Masking particles remaining upon the substrate are thereafter used as a mask to process a substrate. Uncured photosensitive material is used to improve adhesion of masking particles to the substrate to be processed.

[0011] A second aspect of the invention provides a structure forming method including providing a solution comprising a photosensitive material and a plurality of masking particles. The method also provides applying the solution over a substrate and removing at least a portion of the photosensitive material while leaving the masking particles over the substrate. The solution is preferably screen printed. The method also includes processing the substrate using the masking particles as a mask.

[0012] According to another aspect, a method of forming a mask over a substrate includes forming a masking layer over a surface of a substrate. Masking particles are screen printed over a surface of the masking layer and portions of the masking layer are removed using the masking particles. The removing of portions of the masking layer forms a mask. This mask includes a plurality of circular masking elements in some embodiments.

[0013] In another aspect, masking particles are mixed within photoresist to form a solution which can be screen printed. The screen printing includes printing masking particles within the solution containing photoresist. In one embodiment, the solution has a concentration within the approximate range of approximately 1×10^{8}-1×10^{9} masking particles per milliliter of photoresist.

[0014] It is preferred to provide a uniform layer of masking particles upon the masking layer. To this end, screen printing of masking particles guides the masking particles to predefined regions over the substrate. Further, the masking particles are preferably agitated to space the masking particles from one another.

[0015] In some aspects of the invention, the solution is permitted to cure and portions of the photoresist or other photosensitive material is removed. The masking particles

form a mask utilized to form a hardmask from the masking layer. The hardmask is subsequently utilized to form a random array of emitters of a field emission display from an emitter substrate.

BRIEF DESCRIPTION OF THE DRAWINGS

[0016] Preferred embodiments of the invention are described below with reference to the following accompanying drawings.

[0017] **FIG. 1** is a cross-sectional view of a structure including a substrate and a solution layer during processing of the structure.

[0018] **FIG. 2** is a cross-sectional view of a processing step of the structure subsequent to the step of **FIG. 1**.

[0019] **FIG. 3** is a cross-sectional view of a processing step of the structure subsequent to the step of **FIG. 2**.

[0020] **FIG. 4** is a cross-sectional view of a segment of a field emission display having plural emitters fabricated in accordance with processes of the present invention.

[0021] **FIG. 5** is a cross-sectional view of a substrate, masking layer, layer of solution and a screen during fabrication of a backplate of a field emission display.

[0022] **FIG. 6** is a diagrammatic representation of conventional offset screen printing.

[0023] **FIG. 7** is a diagrammatic representation of contact screen printing.

[0024] **FIG. 8** is a top plan view of a predefined region shown at the processing step of **FIG. 5**.

[0025] **FIG. 9** is a cross-sectional view of a processing step for forming the backplate subsequent to the step of **FIG. 5**.

[0026] **FIG. 10** is a cross-sectional view of a processing step of the backplate subsequent to the step of **FIG. 9**.

[0027] **FIG. 11** is a cross-sectional view of a processing step of the backplate subsequent to the step of **FIG. 10**.

[0028] **FIG. 12** is a cross-sectional view of a processing step of the backplate subsequent to the step of **FIG. 11**.

[0029] **FIG. 13** is a cross-sectional view of a processing step of the backplate subsequent to the step of **FIG. 12**.

[0030] **FIG. 14** is a cross-sectional view of emitters formed from an emitter substrate of a field emission display in accordance with the present invention.

DETAILED DESCRIPTION OF THE PREFERRED EMBODIMENTS

[0031] This disclosure of the invention is submitted in furtherance of the constitutional purposes of the U.S. Patent Laws "to promote the progress of science and useful arts" (Article 1, Section 8).

[0032] The present application is described with reference to fabrication techniques for structures which comprise electronic components or devices. Exemplary electronic components are fabricated from semiconductive substrates or substrates for flat panel or field emission display (FED) devices. Such substrates can comprise silicon, glass, quartz or other materials. Structures are processed and subsequently utilized in electronic devices of various configurations.

[0033] During formation of structures such as semiconductive components or FED emitters, it is often necessary to form masks for various processing steps. The masks can be utilized to process into a substrate or form additional layers upon the substrate. Certain aspects of the present invention are directed towards the formation of lithographic masks and the formation of solutions utilized to form lithographic masks.

[0034] Referring to **FIG. 1, a** structure **1** is illustrated. Processing of structure **1** is described with reference to formation of an electronic device or component. For example, structure **1** is processed to comprise a transistor, memory cell, discrete component, such as a resistor or FED emitters in exemplary applications. Structure **1** is fabricated for use in electronic devices in some applications.

[0035] The depicted structure **1** comprises a substrate **2** and a solution layer **3** formed over substrate **2**. Substrate **2** comprises a semiconductive substrate, such as monocrystalline silicon, in some embodiments. In particular, substrate **2** can comprise a field emission display substrate as described below. Alternatively, substrate **2** comprises other materials suitable for forming electronic devices or components.

[0036] Solution layer **3** comprises a medium **4** and a plurality of masking particles **5** within medium **4**. In a preferred embodiment, medium **4** comprises a photosensitive resin or material. Solution layer **3** can be formed to comprise the same solution layer as described below with reference to **FIG. 5** (i.e., solution layer **42**). Utilizing such a solution, masking particles **5** comprise spheres and photosensitive material **4** comprises photoresist. The solution is formed in the exemplary embodiment to have a concentration within an approximate range of 1×10^{8}-1×10^{9} masking particles per milliliter of photosensitive material or photoresist.

[0037] In the presently described embodiment, solution layer **3** can be applied over substrate **2** by any suitable method, such as screen printing. Conventional offset and contact screen printing methods are described below with reference to **FIG. 6** and **FIG. 7**. Such printing techniques are utilized in exemplary processing methods to form solution layer **3**. As described in detail below, screen printing solution layer **3** is preferred to provide a uniform distribution of spheres within layer **3** and over substrate **2**.

[0038] Following provision of solution layer **3** over substrate **2**, medium **4** comprising photosensitive material is cured or developed. Exemplary curing methods include exposing solution layer **3** to ultraviolet light if medium **4** comprises positive photoresist.

[0039] Referring to **FIG. 2**, portions of photosensitive medium **4** are removed following curing of exposed portions of medium **4**. In particular, cured portions of photosensitive material **4** can be stripped or otherwise removed. Masking particles **5** remain over substrate **2** following the removal of cured portions of medium **4**.

[0040] Feet or small portions **6** of photosensitive medium **4** remain intermediate individual masking particles **5** and

substrate **2** following removal of exposed portions of the photosensitive material. Uncured remaining resin feet **6** assist with adhering respective masking particles **5** to substrate **2**.

[**0041**] Removal of exposed portions of photosensitive medium **4** forms a mask **7** comprising masking particles **5** and feet **6**. Mask **7** comprises a lithographic mask for processing of structure **1** in the described embodiment. In particular, masking particles **5** and corresponding feet **6** of mask **7** define exposed regions **8** upon substrate **2**. Exposed regions **8** of substrate **2** can be processed in subsequent fabrication steps.

[**0042**] Referring to **FIG. 3**, an exemplary fabrication step of structure **1** is described. In particular, substrate **2** is processed using masking particles **5** and feet **6** of mask **7** as a lithographic mask. In **FIG. 3**, plural diffusion regions **9** are formed within substrate **2**. Exemplary diffusion regions can comprise p type or n type diffusion regions depending upon the particular structure **1** being processed.

[**0043**] Such diffusion processing is exemplary and other processing steps such as deposition can occur using mask **7**. Following formation of diffusion regions **9**, or other alternative processing, masking particles **5** and feet **6** can be stripped from substrate **2**. Acetone is utilized in one embodiment to strip masking particles **5** and feet **6**.

[**0044**] Referring to **FIG. 4-FIG. 14**, methods of forming masks are described with reference to field emission display devices. Further, methods of forming field emission display emitters are described. The invention is not limited to field emission display device fabrication as described in the following embodiments and applications. Aspects of the present invention described below might be utilized within any masking and etching process.

[**0045**] Referring to **FIG. 4**, an exemplary portion of a field emission display **10** is depicted. The illustrated portion of the field emission display **10** includes a display segment **12**. Display segment **12** is capable of displaying a pixel of information, or a portion of a pixel. For example, display segment **12** may be configured to display one green dot of a red/green/blue fall-color triad pixel. Field emission display **10** includes a faceplate or screen **24** and a cathode plate or baseplate **28** spaced therefrom. Support structures or separators **30** space faceplate **24** from baseplate **28** and generally define segment **12** in the illustrated embodiment.

[**0046**] Baseplate **28** of the described embodiment comprises a matrix addressable array of cathode emission structures or emitters **16**. Baseplate **28** additionally includes an emitter substrate **14**, upon which the emission structures **16** are created, a dielectric insulating layer **26**, and an anodic grid **18**.

[**0047**] Emitter substrate **14** has been patterned and etched to form micro-cathodes or emitters **16** as described in detail below. Display segment **12** includes plural field emission sites **15**. Sites **15** correspond to the emitters **16**. Dielectric insulating layer **26** is formed upon substrate **14** intermediate emitters **16** and sites **15**. More specifically, insulator **26** has plural openings at the field emission sites **15**. A vacuum is created between faceplate **24** and baseplate **28** to provide proper functioning of plural emitters **16** of the described field emission display **10**. Separators **30** function to support atmospheric pressure which exists on electrode faceplate **24** as a result of the vacuum.

[**0048**] Emitters **16** are constructed on top of emitter substrate **14**. Emitters **16** are integral with emitter substrate **14** and individually comprise a cathode for emission of electrons. Alternatively, emitters **16** form cathodes from one or more deposited conductive films, such as a chromium amorphous silicon bilayer. Emitters **16** preferably have a fine micro-point in the described embodiment.

[**0049**] Grid structure **18** surrounds emission sites **15** in the described embodiment. A power source **20** is utilized to apply a voltage differential between the cathodes (emitters **16**) and anodic grid **18**. In particular, emitters **16** are individually electrically coupled with a negative terminal of source **20**. A positive terminal of source **20** is coupled with grid **18**. Grid **18** serves as a structure for applying an electrical field potential to appropriate emitters **16**. A stream of electrons **22** is emitted from emitters **16** responsive to the application of a voltage differential via grid **18**.

[**0050**] A second positive terminal of source **20** is connected with faceplate **24** thereby forming another anode. Faceplate **24** includes a phosphor coating **25** over surface facing emitters **16**. Electrons ejected from emitters **16** are aimed toward faceplate **24**. Further details of field emission displays are described in U.S. Pat. Nos. 5,229,331 and 5,391,259, both incorporated herein by reference.

[**0051**] Referring to **FIG. 5**, fabrication of an exemplary portion of baseplate **28** of a field emission display is shown. In particular, methods of forming field emission display masks utilized for formation of emitters **16** are described. Methods of forming emission display emitters **16** are also described. The formed emitters **16** are conical in the described embodiment. Emitters **16** may comprise protuberances of other shapes in other embodiments.

[**0052**] The illustrated baseplate **28** includes emitter substrate **14**, a masking layer **40** and a layer of solution **42**. A single crystal silicon layer serves as substrate **14** in one embodiment. Amorphous silicon or polysilicon deposited upon a glass substrate are other examples. Other materials are utilized in other embodiments. In particular, substrate **14** of **FIG. 5** can be any material from which emitters **16** can be fabricated.

[**0053**] Masking layer **40**, also referred to as a hardmask layer, comprises a masking layer substrate which is deposited or grown on substrate **14** in the described embodiment. An example material for layer **40** is silicon dioxide. Masking layer **40** preferably has a thickness great enough to avoid being completely consumed during subsequent etching processes. It is also desired to provide a masking layer **40** which is not excessively thick so as to overcome adherent forces which maintain the masking layer in the correct position with respect to emitters **16** throughout the emitter fabrication process as described hereafter. An exemplary range of thicknesses of masking layer **40** is 0.05-0.5 microns with a thickness of 0.2 microns being preferred.

[**0054**] Solution layer **42** comprises a plurality of masking particles **46** within a medium **48**. In one embodiment, masking particles **46** are initially mixed into a fairly viscous or thixotropic medium **48**. Medium **48** is preferably liquid having an operable viscosity range from 10 to 1100 centipoise. A viscosity range from 40 to 200 centipoise is preferred at room temperature. Solution layer **42** is screen printed onto a surface of masking layer **40** and subsequently

cured. As described below, medium **48** is thereafter removed providing an etch mask for fabricating another mask used to form a random array of field emitter tips (i.e., emitters).

[**0055**] Masking particles **46** preferably comprise spherical members and medium **48** comprises photoresist or photo sensitive material such as polyimide. Example materials are polystyrene or latex for spheres **46** and positive photoresist for medium **48**. Masking particles **46** have an exemplary diameter of approximately one micron (0.04 mils). A preferred spherical diameter range is from 0.5 to 2.0 microns.

[**0056**] Masking members or particles **46** are typically provided in a water solution having a density of approximately 10^{11} beads or spheres per milliliter (ml) of solution. Exemplary bead solutions are available from Bangs Labs IDC Corp. The water solution containing the beads or masking particles **46** is dissolved in a carrier, such as isopropyl alcohol, and subsequently combined or mixed with photoresist in one embodiment of the invention. In one example, two cubic centimeters (cc) of isopropyl alcohol were added per one cubic centimeter of bead solution. Then, five cubic centimeters of photoresist were combined with this solution providing a ratio of 1:2:5 by volume. An exemplary ratio range of bead solution to isopropyl alcohol to photoresist is 1:(2 20):(5 50).

[**0057**] A 1:2:5 mixture of solution yields a bead or masking particle density of approximately 1.25×10^{10} beads per milliliter of solution. An exemplary preferred concentration of masking particles **46** within medium **48** is within the approximate range of 1×10^{8}-1×10^{9} beads/ml immediately prior to screen printing upon hardmask masking layer **40**.

[**0058**] In one example, approximately 1×10^{11} spheres were mixed into approximately 300 ml of Olin HPR504 resist comprising medium **48**. The solution containing spheres **46** and medium **48** was screen printed onto a glass substrate using conventional screen printing to form solution layer **42**. A 400 mesh screen having a wire diameter of 0.00075 inches with a patterned emulsion coating of 0.0002 inches was utilized for the screen printing.

[**0059**] A screen **44** is utilized to screen print the solution layer **42** in accordance with the described embodiment of the present invention. It is desired to provide solution layer **42** upon masking layer **42** having a uniform density of masking particles **46**. It is also preferred to provide spacing between adjacent masking particles **46**.

[**0060**] Screen **44** includes plural mesh portions **45** (one whole mesh portion **45** is shown in **FIG. 5**). Mesh portions **45** of screen **44** define predefined regions **50** over masking layer **40** and emitter substrate **14** (one predefined region **50** corresponding to the illustrated mesh portion **45** is shown in **FIG. 5**). Screen **44** includes mesh portions **45** individually having dimensions of 1.75 mils by 1.75 mils square in one example. Screen **44** is thin as possible in preferred embodiments. An exemplary preferred thickness for a cured layer **42** is about five microns.

[**0061**] Referring to **FIG. 6**, conventional offset screen printing of solution to form solution layer **42** is shown. A squeegee **41** is used to urge solution through mesh portions of screen **44**. Solution is deposited onto screen **44** in front of the direction of travel of squeegee **41** in the described embodiment. Screen **44** and masking layer **40** are spaced by a distance d_1 (e.g., 0.04 inches). Squeegee **41** passes laterally over screen **44** and presses screen **44** to contact the layer being printed upon (e.g., masking layer **40**). Squeegee **41** simultaneously forces the solution containing masking particles through mesh portions of screen **44**.

[**0062**] Referring to **FIG. 7**, contact printing of the solution to form solution layer **42** upon masking layer **40** is shown. Screen **44** contacts masking layer **40** when contact printing is utilized. Squeegee **41** passes laterally over screen **44** forcing the solution containing the masking particles through mesh portions of screen **44**. Conventional offset printing is the preferred screen printing method.

[**0063**] Referring to **FIG. 8, a** top view of solution layer **42** and screen **44** are shown. Plural mesh portions **45** (shown in phantom) are defined by screen **44**. Screen **44** also defines plural regions **50** over the masking layer and the emitter substrate (the emitter substrate and the masking layer are below solution layer **42** and not shown in **FIG. 8**). Predefined regions **50** correspond to mesh portions **45** in the illustrated embodiment. In accordance with one aspect of the present invention, mesh portions **45** of screen **44** operate to guide masking particles **46** to respective predefined regions **50** over emitter substrate **14** and masking layer **40**. The prior art is not understood to disclose any mechanism to guide masking particles over the region(s) to be covered with masking particles.

[**0064**] **FIG. 8** illustrates an exemplary number of masking particles **46** within respective predefined regions **50**. More or less masking particles **46** can be provided within individual predefined regions **50**. In a preferred embodiment, a two micron pitch of masking particles **46** is desired if masking particles **46** having a diameter of one micron are utilized. In this embodiment, the approximate number of masking particles **46** received through one mesh portion **45** is the area of the mesh portion in square microns divided by four. Further, **FIGS. 5 and 8** diagrammatically illustrate screen printing of masking particles **46** and are not to scale.

[**0065**] Referring to **FIG. 9**, screen **44** is removed from backplate segment **28** following formation of solution layer **42** over emitter substrate **14**. Screen **44** is ideally removed before substantial curing of solution layer **42**. Masking particles **46** and medium **48** flow to fill the void created by the removal of screen **44**.

[**0066**] Backplate segment **28**, including emitter substrate **14**, masking layer **40** and solution layer **42**, is preferably agitated following removal of screen **44** and prior to substantial curing. Such agitation encourages movement of masking particles **46** apart from one another and provides spacing intermediate adjacent masking particles **46**. Such agitation also encourages settling of masking particles **46** upon masking layer **40**. Masking particles **46** may also adhere to masking layer **40** following contacting of the same. Subsequently, solution layer **42** is cured. An example curing process includes air drying backplate **28** for twenty minutes in ambient air at 50% humidity. Masking particles **46** define intermediate portions **54** of medium **48** between adjacent masking particles **46**.

[**0067**] Referring to **FIG. 9** and **FIG. 10**, following curing of solution layer **42**, medium **48**, including intermediate portions **54** thereof, is stripped or otherwise removed. In embodiments where medium **48** comprises positive photoresist, baseplate segment **28** is flood exposed to ultraviolet

light and developed. Media **48**, including intermediate portions **54**, is thereafter stripped. A foot or small portion **52** of medium **48** can remain intermediate individual masking particles **46** and masking layer **40**. Feet **52** of medium **48** are defined by the diameter of respective masking particles **46**. Masking particles **46** preferably contact masking layer **40**. Remaining portions of medium **48** or feet **52** assist with adhesion of bases of masking particles **46** to masking layer **40**. Masking particles **46** and feet **52** form a mask **59** upon masking layer **40**. In particular, masking particles **46** and feet **52** define plural exposed portions or regions **58** of masking layer **40**.

[**0068**] Referring to **FIG. 10** and **FIG. 11**, exposed portions **58** of masking layer **40** are removed from emitter substrate **14** using spheres **46** as mask **59**. In one embodiment, anisotropic etching is utilized. An example chemistry includes CF_4, CHF_3, Ar_2 as described in the '259 patent. Such removal of exposed portions **58** of masking layer **40** provides masking elements **56** beneath masking particles **46**. Masking elements **56** substantially correspond to, or are defined by, the diameters of respective masking particles **46**. Masking elements **56** are circular in the described embodiment. Utilization of masking particles **46** in accordance with the present invention improves critical dimension control while producing masking elements **56**.

[**0069**] Referring to **FIG. 12**, the beads or masking particles and the feet have been stripped from masking elements **56**. Acetone is utilized in one embodiment to strip the masking particles and feet. Masking elements **56** define a mask **57**, which is also referred to herein as a hardmask. Masking elements **56** define exposed regions or portions **60** of emitter substrate **14**. Exposed portions **60** are intermediate masking elements **56**.

[**0070**] Referring to **FIG. 13**, portions of emitter substrate **14**, including exposed portions **60**, have been etched (preferably substantially isotropically) to form plural emitters **16**. An example etching chemistry is SF_6, Cl_2, He as set forth in the '259 patent. Emitters **16** are formed corresponding to circular masking elements **56**. A timed etch is utilized to form emitters **16** in one embodiment.

[**0071**] Referring to **FIG. 14, a** substantially uniform array **62** of emitters **16** is shown upon emitter substrate **14**. The insulating dielectric layer may be subsequently formed to fabricate the backplate **28** shown in **FIG. 4**. Additionally, the anodic grid may be provided enabling control of the emission of electrons from emitters **16**.

[**0072**] In compliance with the statute, the invention has been described in language more or less specific as to structural and methodical features. It is to be understood, however, that the invention is not limited to the specific features shown and described, since the means herein disclosed comprise preferred forms of putting the invention into effect. The invention is, therefore, claimed in any of its forms or modifications within the proper scope of the appended claims appropriately interpreted in accordance with the doctrine of equivalents.

1. A lithographic mask forming solution comprising:

a photosensitive material; and

a plurality of masking particles within the photosensitive material.

2. The solution according to claim 1 wherein the photosensitive material comprises photoresist.

3. The solution according to claim 1 wherein the solution has a concentration within an approximate range of 1×10^8-1×10^9 masking particles per milliliter of photosensitive material.

4. A structure comprising:

a substrate; and

a layer of solution provided over the substrate, the solution comprising a photosensitive material and a plurality of masking particles.

5. The structure according to claim 4 wherein the layer of solution is screen printed over the substrate.

6. The structure according to claim 4 wherein the substrate comprises a field emission display substrate.

7. The structure according to claim 4 wherein the photosensitive material comprises photoresist.

8. The structure according to claim 4 wherein the substrate comprises a field emission display substrate and the photosensitive material comprises photoresist.

9. A structure forming method comprising:

providing a solution including photosensitive material and a plurality of masking particles;

applying the solution over a substrate;

removing at least a portion of the photosensitive material while leaving the masking particles over the substrate; and

processing the substrate using the masking particles as a mask.

10. The method according to claim 9 wherein the applying comprises screen printing the solution over the substrate.

11. The method according to claim 9 wherein the substrate comprises a field emission display substrate.

12. The method according to claim 9 wherein the substrate comprises a semiconductive substrate.

13. The method according to claim 9 wherein the method comprises an electronic device forming method.

14. The method according to claim 9 further comprising adhering the masking particles over the substrate using the photosensitive material.

15. The method according to claim 9 further comprising removing the masking particles following the processing.

16. The method according to claim 9 wherein the providing comprises providing a solution including photosensitive material comprising photoresist.

17. A structure forming method comprising:

providing a solution including photosensitive material and a plurality of masking particles within the photosensitive material;

screen printing a layer of the solution over a substrate;

curing at least a portion of the photosensitive material screen printed over the substrate;

removing cured photosensitive material while leaving the masking particles over the substrate; and

processing the substrate using the masking particles as a mask.

18. The method according to claim 17 wherein the substrate comprises a field emission display substrate.

19. The method according to claim 17 wherein the substrate comprises a semiconductive substrate.

20. The method according to claim 17 further comprising adhering the masking particles over the substrate using the photosensitive material.

21. The method according to claim 17 further comprising removing the masking particles following the processing.

22. The method according to claim 17 wherein the providing comprises providing a solution including photosensitive material comprising photoresist.

23. A mask forming method comprising:

providing a solution including photosensitive material and a plurality of masking particles within the photosensitive material;

applying the solution over a substrate;

curing at least a portion of the photosensitive material applied over the substrate; and

removing cured photosensitive material while leaving the masking particles over the substrate.

24. The method according to claim 23 wherein the applying comprises screen printing the solution over the substrate.

25. The method according to claim 23 wherein the applying comprises applying the solution over a semiconductive substrate.

26. The method according to claim 23 wherein the applying comprises applying the solution over a masking layer substrate.

27. The method according to claim 23 further comprising adhering the masking particles over the substrate using the photosensitive material.

28. The method according to claim 23 wherein the providing comprises providing a solution including photosensitive material comprising photoresist.

29. A lithographic mask solution forming method comprising:

providing a photosensitive material;

providing a plurality of masking particles; and

mixing the masking particles with the photosensitive material.

30. The method according to claim 29 further comprising mixing the masking particles with a carrier.

31. The method according to claim 29 wherein the providing the photosensitive material comprises providing photoresist.

32. A mask forming method comprising:

forming a masking layer over a surface of a substrate;

screen printing plural masking particles over a surface of the masking layer; and

removing at least portions of the masking layer using the masking particles as a mask.

33. The method according to claim 32 wherein the screen printing comprises offset screen printing.

34. The method according to claim 32 further comprising removing the masking particles following the removing.

35. The method according to claim 32 further comprising agitating the masking particles following the screen printing.

36. The method according to claim 32 wherein the screen printing comprises printing spherical masking particles.

37. The method according to claim 32 wherein the screen printing comprises printing masking particles within a solution containing photoresist.

38. The method according to claim 37 further comprising:

curing the photoresist; and

removing portions of the photoresist from over the masking particles and masking layer.

39. The method according to claim 37 wherein the screen printing comprises printing masking particles within a solution having a concentration within an approximate range of 1×10^{8}-1×10^{9} masking particles per milliliter of photoresist.

40. The method according to claim 32 further comprising guiding the spherical masking particles over predefined regions of the masking layer by the screen printing.

41. The method according to claim 32 wherein the removing forms discrete circular masking elements.

42. The method according to claim 32 wherein the removing comprises anisotropically etching the masking layer.

43. The method according to claim 32 wherein the forming comprises forming a masking layer over an emitter substrate of a field emission display.

44. A mask forming method comprising:

forming a masking layer over a surface of a substrate;

forming a layer of masking particles over a surface of the masking layer;

providing the masking particles over predefined regions of the surface of the substrate during the forming; and

removing at least portions of the masking layer using the masking particles as a mask.

45. The method according to claim 44 further comprising removing the masking particles following the removing.

46. The method according to claim 44 further comprising agitating the masking particles following the providing.

47. The method according to claim 44 wherein the providing comprises printing the masking particles using a screen.

48. The method according to claim 44 wherein the providing comprises screen printing masking particles within a solution containing photoresist.

49. The method according to claim 48 further comprising:

curing the photoresist; and

removing portions of the photoresist from over the masking particles and masking layer.

50. The method according to claim 44 wherein the removing comprises anisotropically etching the masking layer.

51. The method according to claim 44 wherein the forming comprises forming a masking layer over an emitter substrate of a field emission display.

52. A mask forming method comprising:

forming a masking layer over a surface of a substrate;

forming a layer of solution including plural masking particles over a surface of the masking layer;

guiding the masking particles to predefined regions over the substrate using a screen; and

removing at least portions of the masking layer using the masking particles as a mask.

53. The method according to claim 52 further comprising agitating the masking particles following the guiding.

54. The method according to claim 52 wherein the forming a masking layer comprises forming a masking layer over an emitter substrate of a field emission display.

55. The method according to claim 52 wherein the forming the layer of solution comprises screen printing masking particles within photoresist.

56. The method according to claim 55 further comprising:

curing the photoresist; and

removing portions of the photoresist from over the masking particles and masking layer.

57. The method according to claim 52 wherein the removing comprises anisotropically etching the masking layer.

58. A field emission display emitter mask forming method comprising:

forming a masking layer over a surface of an emitter substrate;

printing a layer of masking particles over a surface of the masking layer using a screen;

removing portions of the masking layer intermediate the screen printed masking particles; and

removing the masking particles from remaining portions of the masking layer following the removing of portions of the masking layer.

59. The method according to claim 58 further comprising removing the screen following the printing and prior to the removing the portions of the masking layer.

60. The method according to claim 58 further comprising agitating the masking particles following the printing.

61. The method according to claim 58 wherein the printing comprises printing the masking particles within a solution containing photoresist.

62. The method according to claim 61 further comprising:

curing the photoresist; and

removing portions of the photoresist from over the masking particles and masking layer.

63. The method according to claim 58 wherein the removing portions of the masking layer comprises anisotropically etching the masking layer.

64. A method of forming plural field emission display emitters comprising:

forming a masking layer over an emitter substrate;

screen printing a plurality of masking particles over the masking layer;

removing portions of the masking layer intermediate the screen printed masking particles to form a plurality of masking elements comprising the masking layer;

removing the masking particles from the masking elements; and

removing portions of the emitter substrate using the masking elements as a mask to form plural emitters.

65. The method according to claim 64 further comprising removing a screen following the printing.

66. The method according to claim 64 further comprising agitating the masking particles following the screen printing.

67. The method according to claim 64 wherein the screen printing comprises printing masking particles within a solution containing photoresist.

68. The method according to claim 67 further comprising:

curing the photoresist; and

removing portions of the photoresist from over the masking particles and masking layer.

69. The method according to claim 64 further comprising guiding the spherical masking particles over predefined regions of the masking layer by the screen printing.

70. The method according to claim 64 wherein the removing portions of the emitter substrate comprises removing using the masking elements.

71. The method according to claim 64 wherein the removing portions of the masking layer comprises anisotropically etching the masking layer.

72. The method according to claim 64 wherein the removing portions of the emitter substrate comprises removing using an isotropic etch.

73. A method of forming a substantially uniform array of emitters upon an emitter substrate during field emission display fabrication comprising:

providing an emitter substrate;

forming a hardmask layer over the emitter substrate;

providing a solution containing a plurality of spherical masking particles and photoresist, the solution having a concentration within an approximate range of 1×10^{8} - 1×10^{9} masking particles per milliliter of photoresist;

forming a layer of the solution including the spherical masking particles and photoresist upon a surface of the hardmask layer, the forming of the layer including:

guiding the spherical masking particles to predefined regions over the surface of the hardmask layer using a screen;

removing the screen;

agitating the layer of solution formed upon the surface of the hardmask layer; and

curing the layer of solution following the agitating;

stripping portions of the photoresist intermediate the spherical masking particles following the forming of the layer of the solution;

etching portions of the hardmask layer intermediate the screen printed spherical masking particles using an anisotropic etch thereby forming a plurality of circular masking elements beneath the spherical masking particles;

stripping the spherical masking particles from the circular masking elements; and

etching portions of the emitter substrate to form plural emitters corresponding to the circular masking elements using an isotropic etch.

* * * * *