E. J. VOGEL.

GOLF CLUB HOLDER.

APPLICATION FILED FEB. 25, 1918.

1,314,171. Patented Aug. 26, 1919.

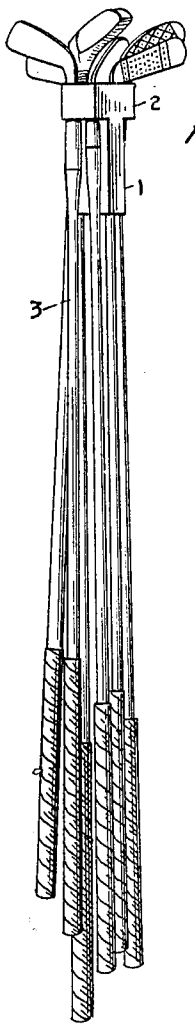

FIG. 1

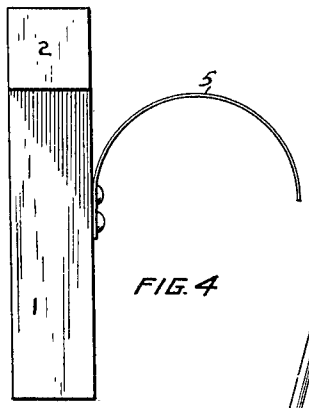

FIG. 4

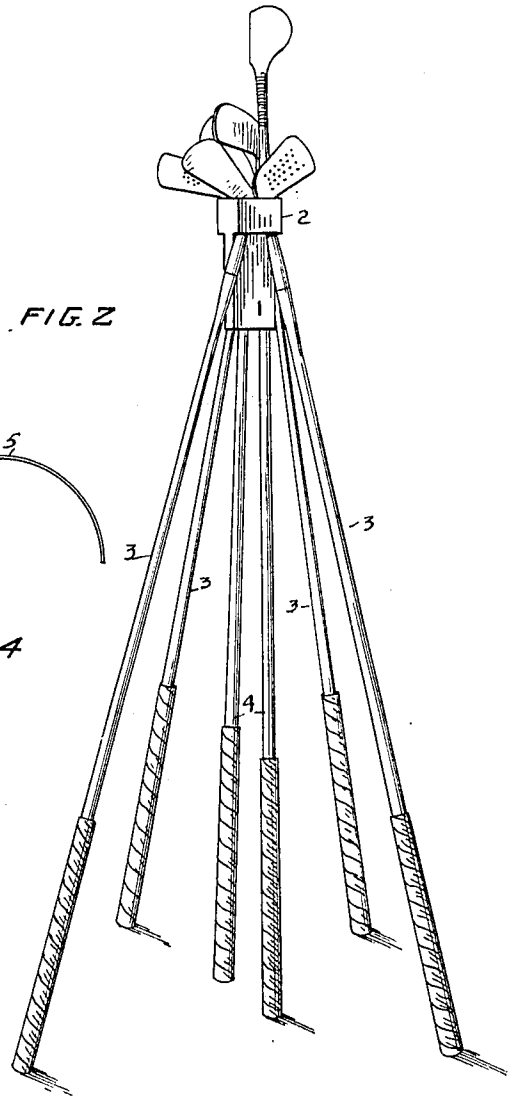

FIG. 2

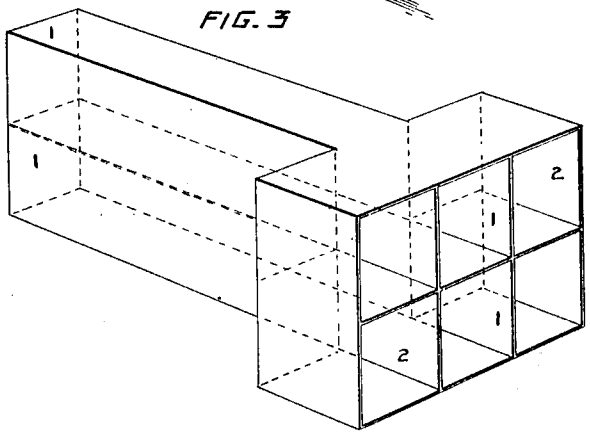

FIG. 3

INVENTOR
E. J. VOGEL

BY J. M. Wright,
ATT'Y.

UNITED STATES PATENT OFFICE.

EDWARD J. VOGEL, OF SAN FRANCISCO, CALIFORNIA.

GOLF-CLUB HOLDER.

1,314,171. Specification of Letters Patent. Patented Aug. 26, 1919.

Application filed February 25, 1918. Serial No. 219,163.

To all whom it may concern:

Be it known that I, EDWARD J. VOGEL, a citizen of the United States, residing at San Francisco, in the county of San Francisco and State of California, have invented new and useful Improvements in Golf-Club Holders, of which the following is a specification.

This invention relates to improvements in golf club holders. One object of the invention is to provide such a holder which will be of less weight than the bags at present in use for this purpose, thus facilitating the carrying of the clubs by the player himself. A further object is to provide such a holder which will avoid the necessity of the player stooping down to pick up the clubs from the ground after each play.

In the accompanying drawing, Figure 1 is a side view of a set of golf clubs engaged by my improved holder in the position in which they are carried by the player; Fig. 2 is a similar view of the clubs and holder in the position in which they are standing on the ground; Fig. 3 is a perspective view of the holder detached; Fig. 4 is a side view of a modification.

On referring to the drawing, it will be seen that my improved holder is formed of a plurality of tubes, preferably one for each golf club. These tubes comprise inner tubes 1 and outer tubes 2. I have herein shown six tubes in all, so that the holder is capable of holding six golf clubs, there being two inner tubes 1 and four outer tubes 2, two of the latter being on each side of the inner tubes 1. The inner tubes 1 are considerably longer than the outer tubes 2 for a reason which will presently appear. In all cases there should be at least four outer tubes, but there may be any number of inner tubes. In the outer tubes are placed the shafts 3 of clubs which are as nearly as possible of the same length, while the central tubes contain the shafts of the other clubs. When being carried around the links by the player, the shafts of the clubs are carried close together and the tubes of the holder surround the several shafts and lie close to the heads of the clubs, but when a player arrives at the ball and is about to make his next stroke, he draws out of the holder the club which he proposes to use and then spreads out the lower ends of the shafts of the four clubs 3 which are in the outer tubes, or three of them if one of them has already been removed for playing, and stands the lower divergent ends of the clubs upon the ground in the manner of a tripod. The shafts 4 extend through the inner tubes in an upright position either standing on the ground, or, in case of a short club like the putter, depending from the holder. In this position the holder itself cannot slide downward upon the clubs, because the clubs through the outer tubes are standing obliquely and spread outward downwardly. When the player has made his stroke he replaces the shaft of the club he has been using in the empty tube of the holder and picks up the clubs and carries them with their shafts close together, as shown in Fig. 1.

The tubes may be of any cross-sectional form, but I find it a disadvantage to make them of a circular cross section, because such form does not readily allow the shafts of the clubs to extend obliquely through the tubes.

The inner tubes 1 are made longer than the outer tubes 2 in order to insure that the club shafts therein extend directly downward, as it is undesirable that these shafts should be able to swing out obliquely from the holder, as then they would be in the way of the shafts through the outer tubes when spreading them into their proper oblique positions to form a tripod-like stand. With a little practice, the player finds it easy to so arrange the shafts, and with long continued practice the operation becomes almost automatic.

Many players dislike to employ caddies to carry their clubs and would prefer to carry them themselves but for the weight of the bag and clubs, and the necessity of stooping to pick up the clubs after a stroke is made. By employing my improved holder, which is very light, the weight of the bag is dispensed with, and the weight to be carried is thus greatly reduced, and it is no longer necessary to stoop at all to pick up the clubs.

In the form of the invention shown in Fig. 4, a hook or handle 5 is secured to the holder, which can be hooked over the arm to facilitate the carrying of the clubs.

By a "practical tripod" in the claim is

meant one of sufficient height to enable it to be easily taken up by the player without stooping.

I claim:—

A golf club holder, comprising individual tubes for golf clubs rigidly secured together so as to extend in parallelism and each of sufficient width in proportion to their lengths to permit the club shafts therein to extend downwardly and outwardly in oblique positions to form a tripod, but being sufficiently long to prevent the club shafts from extending outwardly too far to form a practical tripod.

E. J. VOGEL.

Copies of this patent may be obtained for five cents each, by addressing the "Commissioner of Patents, Washington, D. C."