No. 897,503. PATENTED SEPT. 1, 1908.

C. WEDEKIND.

GASEOUS FLUID TURBINE.

APPLICATION FILED OCT. 16, 1906.

4 SHEETS—SHEET 1.

FIG. 1.

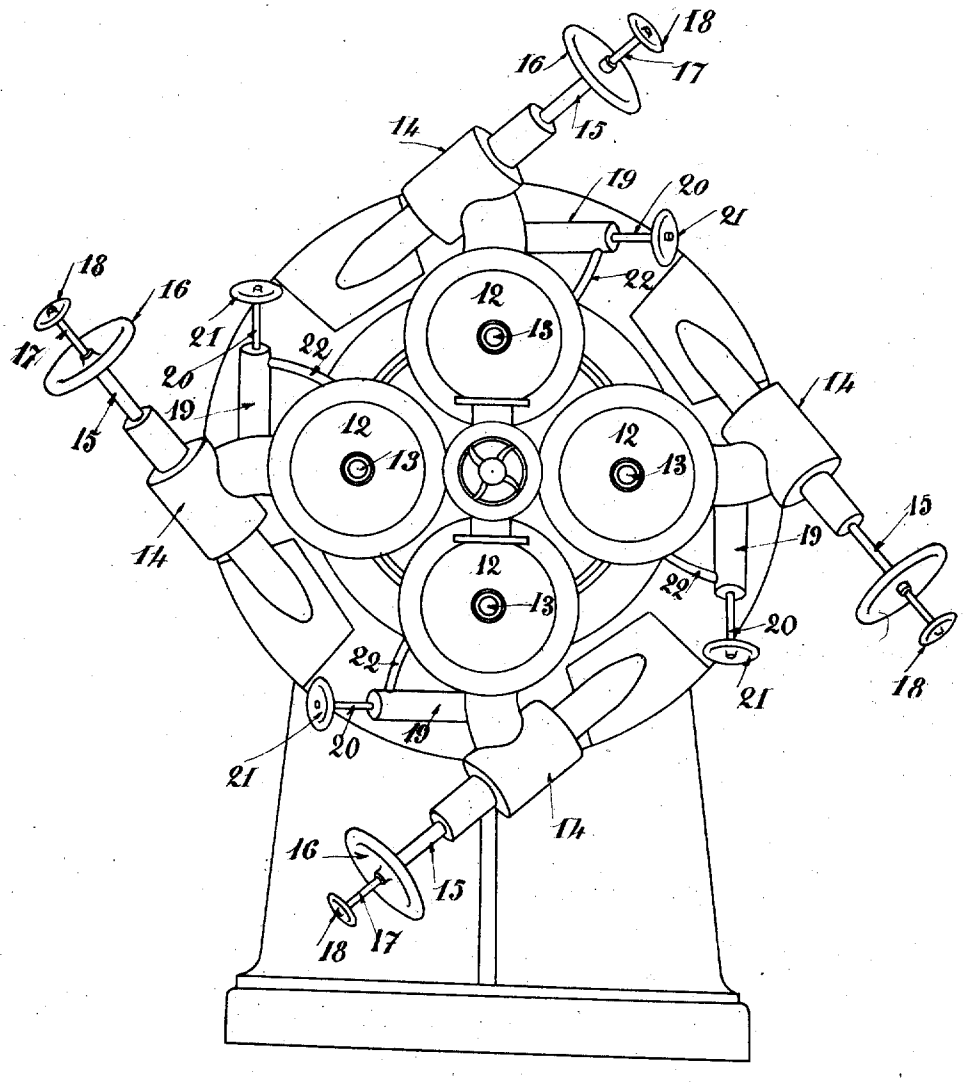

WITNESSES.
Alvin E. White
W. P. Burke

INVENTOR
Carlo Wedekind
BY
ATTYS

No. 897,503. PATENTED SEPT. 1, 1908.

C. WEDEKIND.

GASEOUS FLUID TURBINE.

APPLICATION FILED OCT. 16, 1906.

4 SHEETS—SHEET 2.

FIG. 2.

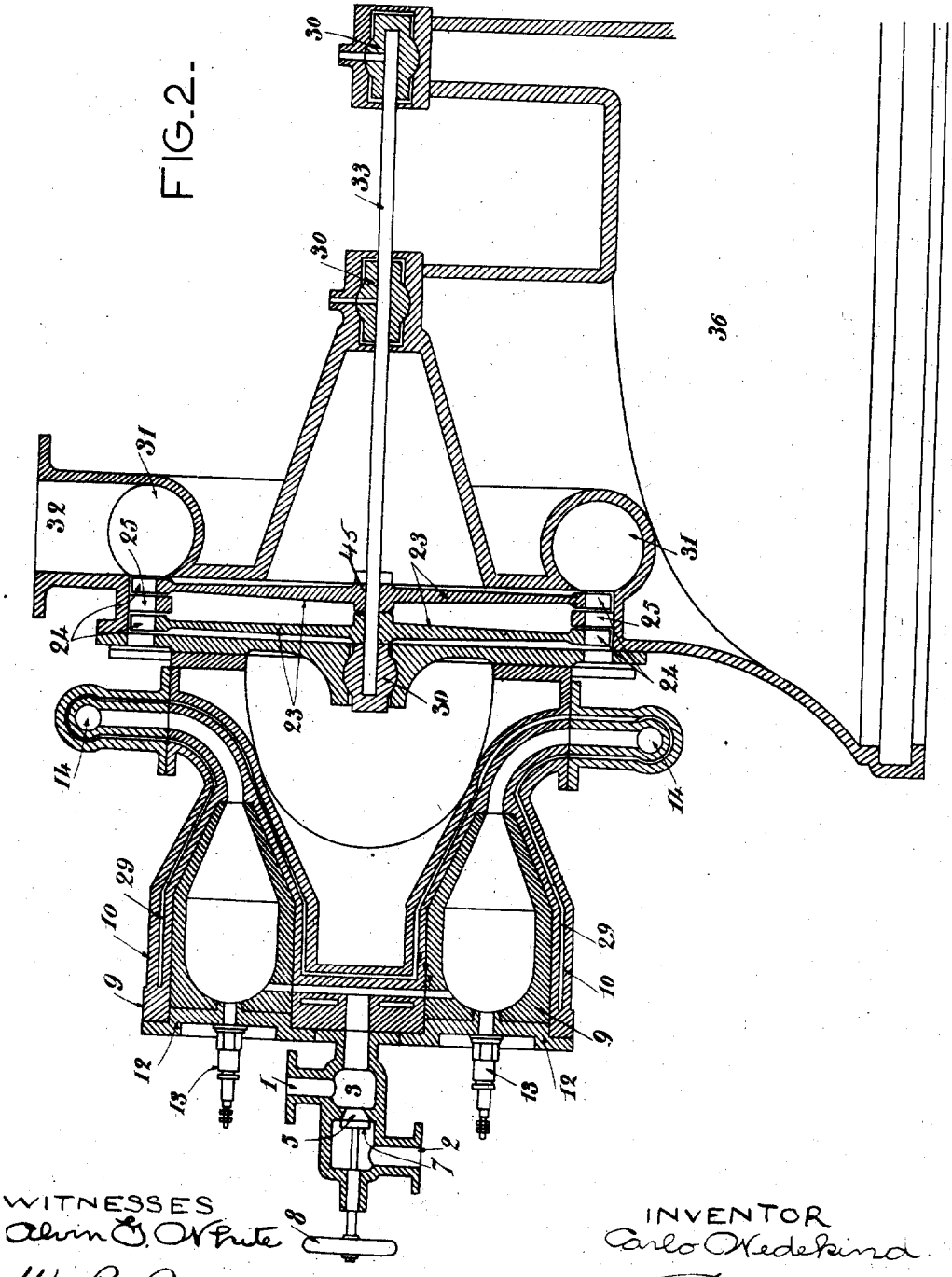

WITNESSES

Alvin G. White

W. P. Burke

INVENTOR

Carlo Wedekind

BY Richards & Co.

ATTYS

No. 897,503. PATENTED SEPT. 1, 1908.

C. WEDEKIND.

GASEOUS FLUID TURBINE.

APPLICATION FILED OCT. 16, 1906.

4 SHEETS—SHEET 3.

FIG. 3.

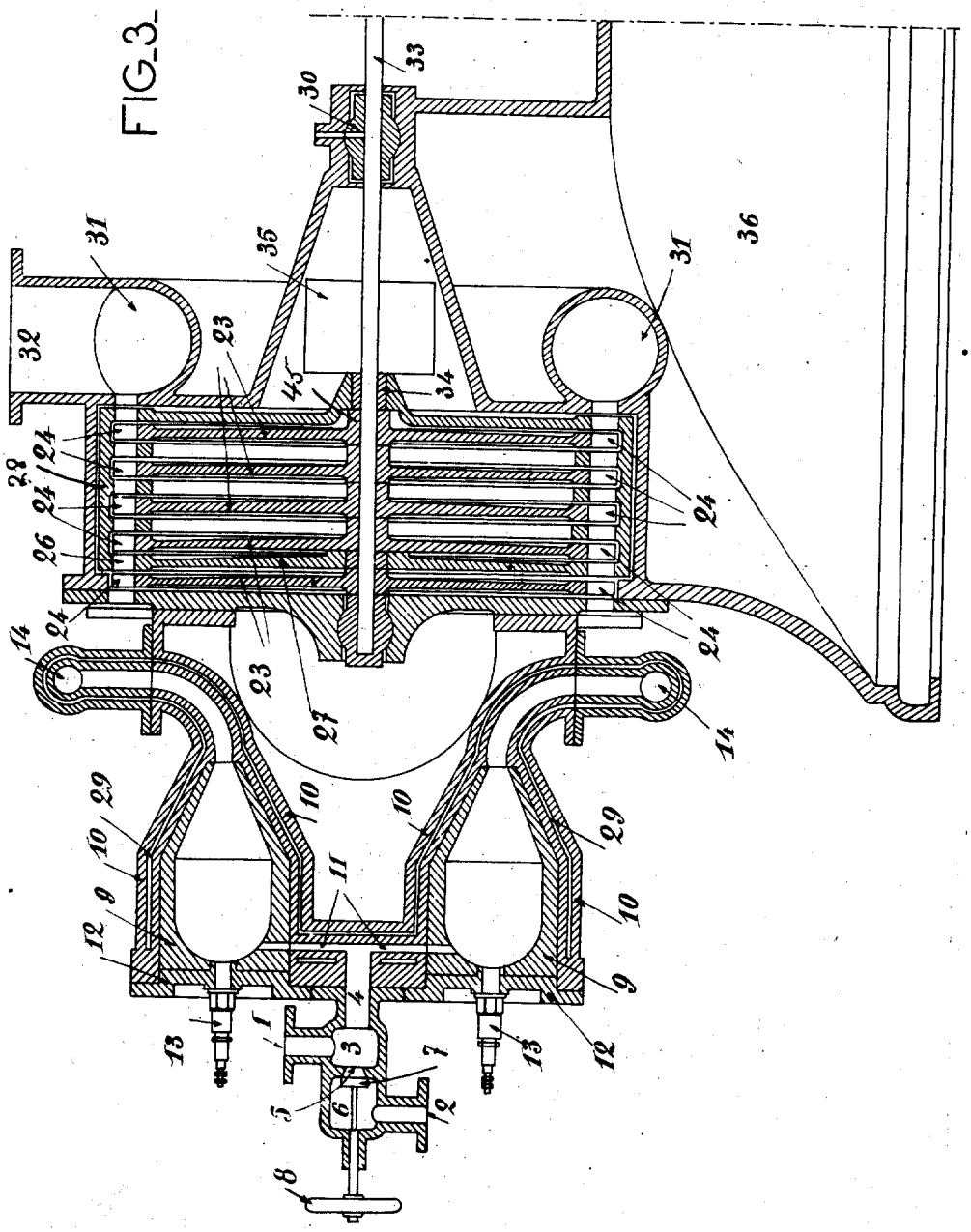

WITNESSES

[redacted] P. Burke

INVENTOR

Carlo Wedekind

BY Richards & Co

ATTYS.

No. 897,503. PATENTED SEPT. 1, 1908.

C. WEDEKIND.

GASEOUS FLUID TURBINE.

APPLICATION FILED OCT. 16, 1906.

4 SHEETS—SHEET 4.

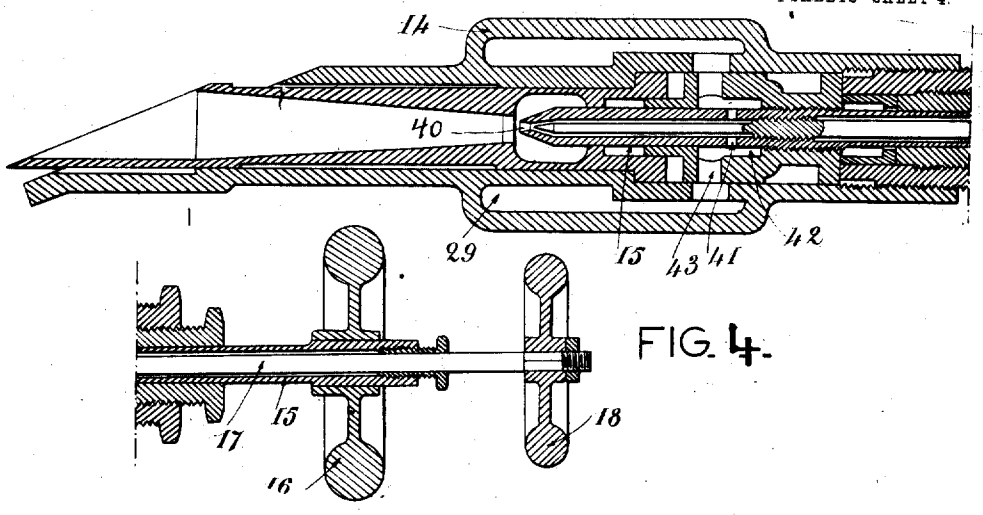

FIG. 4.

WITNESSES
Alvin G. O'Bride
W. P. Burke

INVENTOR
Carlo Wedekind
BY Richards & Co.
ATTYS.

UNITED STATES PATENT OFFICE.

CARLO WEDEKIND, OF ST. JEAN-SUR-MER, FRANCE.

GASEOUS-FLUID TURBINE.

No. 897,503. Specification of Letters Patent. Patented Sept. 1, 1908.

Application filed October 16, 1906. Serial No. 339,240½.

To all whom it may concern:

Be it known that I, CARLO WEDEKIND, civil engineer, subject of Germany, residing at St. Jean-sur-Mer, (Alpes Maritimes,) in France, have invented new and useful Improvements in Gaseous-Fluid Turbines, of which the following is a specification.

This invention relates to a type of turbine utilizing the expansive power of an explosive mixture composed either of permanent gases, the vapors of liquid hydrocarbons, gases produced by the distillation or dissociation of coal, anthracite, coke, wood, heavy or light oils or any other fuel which generates a combustible gas in a gas producer. This type of turbine comprises essentially

1.—A charging apparatus.

2.—A certain number of explosion chambers according to the fuel employed or to the power of the engine.

3.—A certain number of nozzles.

4.—The turbine proper, and

5.—According to circumstances one or more compressors to previously compress the gas or air intended for the engine.

The annexed drawings show various embodiments of the invention.

Figure 1 is an end elevation of the apparatus, Fig. 2 is a vertical longitudinal section of same. Fig. 3 is a vertical longitudinal section of a modified construction of the apparatus, and, Fig. 4 is a longitudinal central section of a gas nozzle.

The charging apparatus is composed of a chamber 3, the dimensions of which depend upon the gaseous mixture used in the turbine. The admission of air takes place through the pipe 1 and is regulated by an ordinary cock. The pipe 4 leads the mixture into the explosion or combustion chambers. The wall of the chamber 3 opposite the pipe 4, or any other wall may be perforated with one or more openings 5. These openings communicate with one or more chambers 6 each of which is provided with a pipe 2. The opening or openings 5 are regulated by the valves 7 operated by hand-wheels 8. The pipes 2 serve to introduce the gas or gases serving to form the combustible mixture. The explosion or combustion chambers are formed by a retort 9 of refractory material of spherical, oval, cylindrical or any other suitable shape fitted in a metal casing 10 which may or may not be cooled by circulation of water in the annular chamber 29. This circulation may serve, for example, to produce steam. The chambers communicate with the charging apparatus by the passages 11. Each refractory retort is secured in place by a plate 12 perforated by a screw-threaded central opening in which is screwed the spark-plug 13.

The gas nozzles 14 are of special construction, one form of which is shown by way of example in Fig. 4, lead the gases onto the blades of the turbine. The regulation is made by a needle 15 operated by a hand-wheel 16. This needle is hollow and has at one of its ends an opening 40 in the form of a small nozzle which may be opened or closed by a second needle 17 operated by the hand wheel 18.

The interior of the needles 15 is in constant communication with the water circulation by means of the openings 41 which open into a chamber 42 which communicates by the openings 43 with the water jacket 29. This steam entering the needle 15 may serve to aid the gas in the gas nozzles as well as to start the operation of the apparatus. Other nozzles 19 convey steam onto the blades of the turbine and may also serve for starting the operation. During the normal operation they serve to cool the blades of the turbine. These nozzles are regulated by a needle 20 operated by a hand-wheel 21. They receive the steam from the double casing by the passages 22 communicating with chamber 29. The turbine proper is formed as shown in Fig. 2, either by one or more disks 23. These disks may be made of sheet nickel, steel or any other metal, fixed on a hub 45 keyed on the shaft 33. The disks 23 carry on their peripheries a series of blades 24.

In the case of the disks turning in the same direction between two successive disks is interposed a series of blades 25 for guiding the flow of gas.

In the case of crowns turning in opposite directions, as for example in Fig. 3, the first series of blades turning in an opposite direction to the first disk is formed either by the first of the crowns 26 adjoining the movable support 28 or by a kind of wheel the felly of which will be formed by this crown and the hub of which will serve for centering on the shaft 33 to the support 28 common to all the crowns. In this case the support 28 carrying the crowns of blades is keyed on a hollow sleeve 34 the movement of which is guided by a gear box 35 shown diagrammatically in the drawing to make the invention more readily

understood. The shaft 33 turns in a certain number of bearing blocks such as ball and socket bearings, according to the angular velocity of the shaft. Between these two blocks to the right of the figure will be keyed a pinion gearing with another pinion secured on a shaft parallel to the shaft 33 and the ratio of diameters of which depends on the speed of the shaft. This shaft is not shown in the figure for its position may vary according to the application of the turbine.

The gases in their egress from the last series of blades escape into a collector 31 provided with a pipe 32. The sole-plate 36 of the engine may be of different forms according to the application of the turbine.

Having now described my invention, what I claim as new and desire to secure by Letters Patent is:

In a gaseous fluid turbine of the kind described, the combination of a charging apparatus, explosion chambers formed by a retort of refractory material communicating each directly with the charging apparatus, a water-jacket surrounding the explosion chambers, double concentric nozzles leading opposite the blades of the turbine, the inner one of which is connected with the water-jacket and the outside one with the explosion chambers, and secondary nozzles conveying steam from the water-jacket to the blades of the turbine, substantially as described and for the purpose set forth.

In testimony whereof I have signed my name to this specification in the presence of two subscribing witnesses.

CARLO WEDEKIND.

Witnesses:
M. LAING,
JOSEPH GAUTIER.