May 9, 1939. H. B. SHAW 2,157,636

MOTOR CONTROL SYSTEM FOR A TRAFFIC SIGNAL

Filed Nov. 25, 1935 4 Sheets-Sheet 1

Fig. 1.

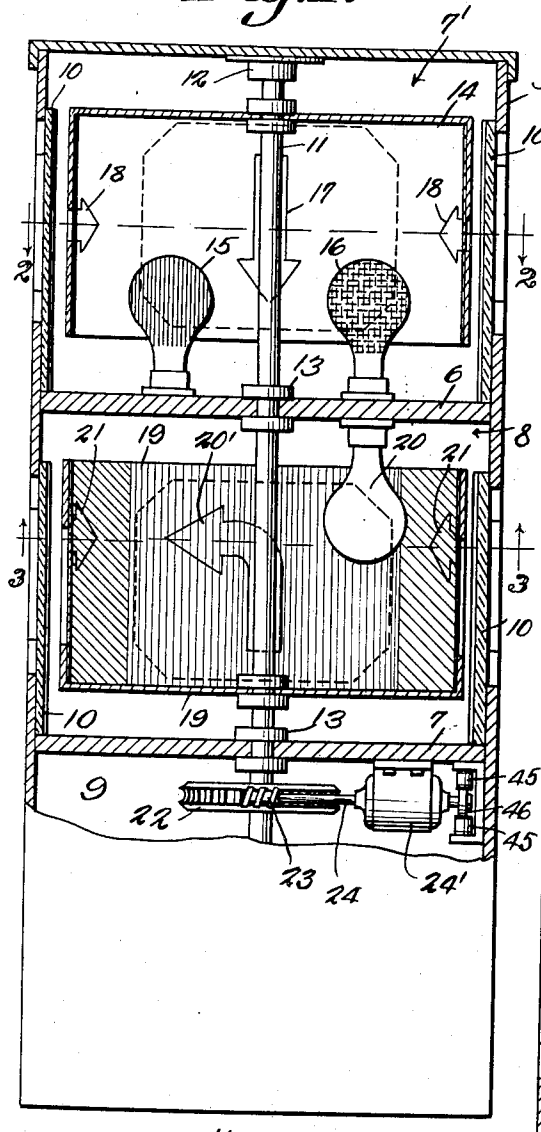

Fig. 2.

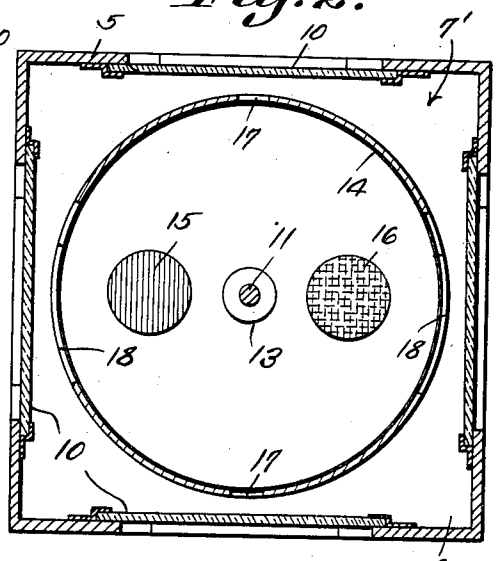

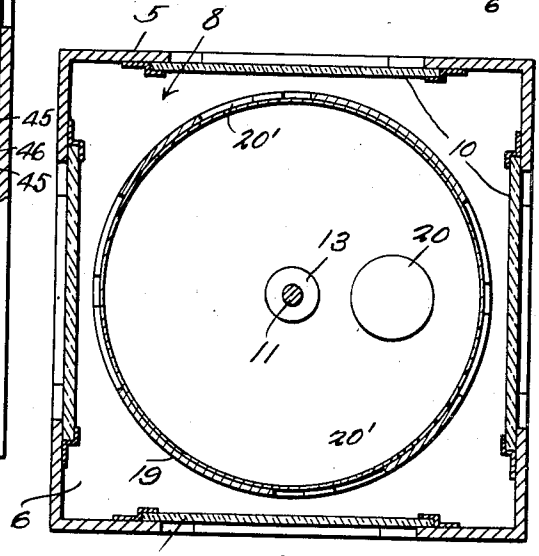

Fig. 3.

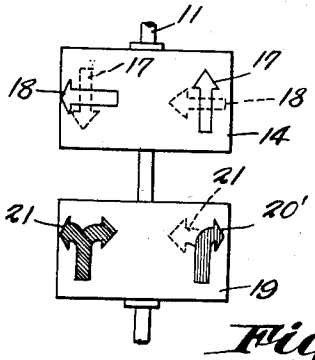

Fig. 4.

Inventor

H. B. Shaw

By C. A. Snow & Co.

Attorneys.

May 9, 1939. H. B. SHAW 2,157,636

MOTOR CONTROL SYSTEM FOR A TRAFFIC SIGNAL

Filed Nov. 25, 1935 4 Sheets-Sheet 2

Fig. 5.

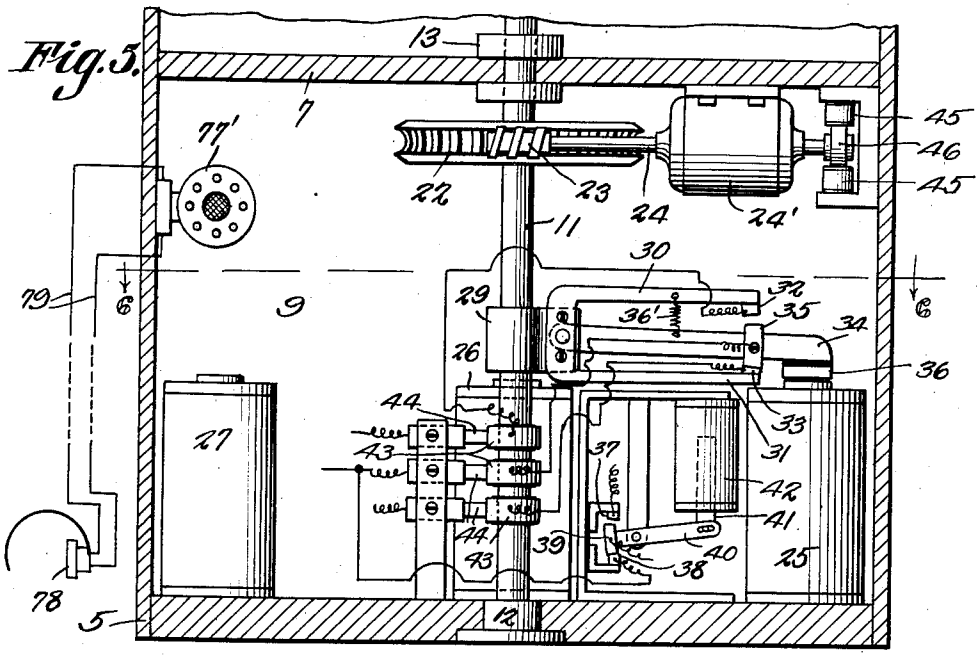

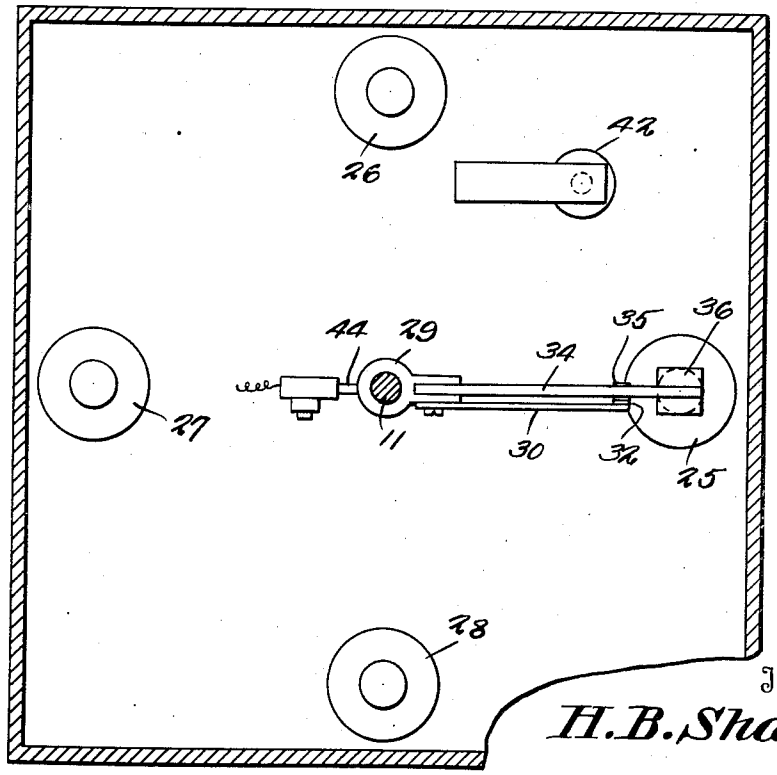

Fig. 6.

Inventor
H. B. Shaw

By C. A. Snow & Co.
Attorneys.

May 9, 1939. H. B. SHAW 2,157,636

MOTOR CONTROL SYSTEM FOR A TRAFFIC SIGNAL

Filed Nov. 25, 1935 4 Sheets-Sheet 3

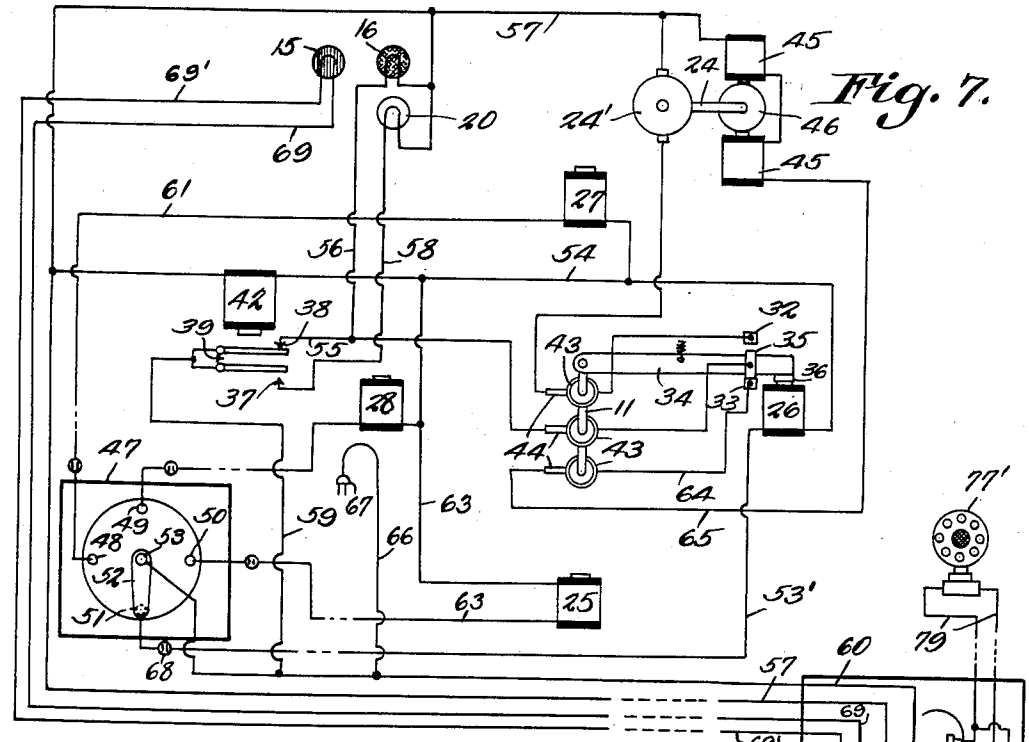

Fig. 7.

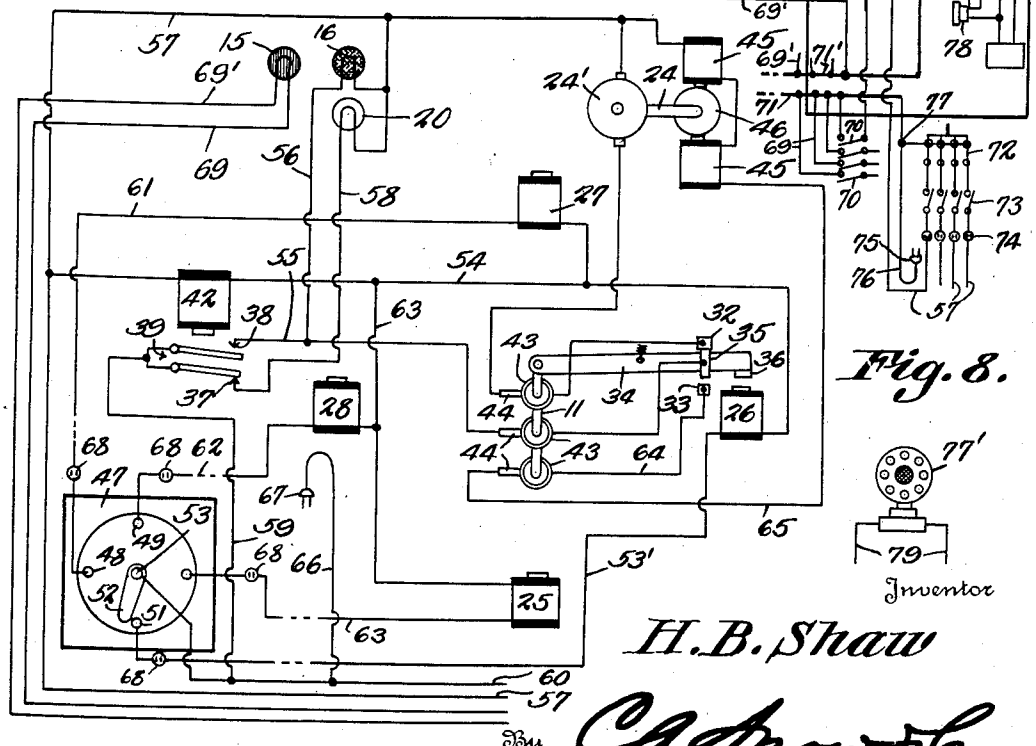

Fig. 8.

Inventor

H. B. Shaw

By C. A. Snow & Co.

Attorneys.

May 9, 1939. H. B. SHAW 2,157,636

MOTOR CONTROL SYSTEM FOR A TRAFFIC SIGNAL

Filed Nov. 25, 1935 4 Sheets-Sheet 4

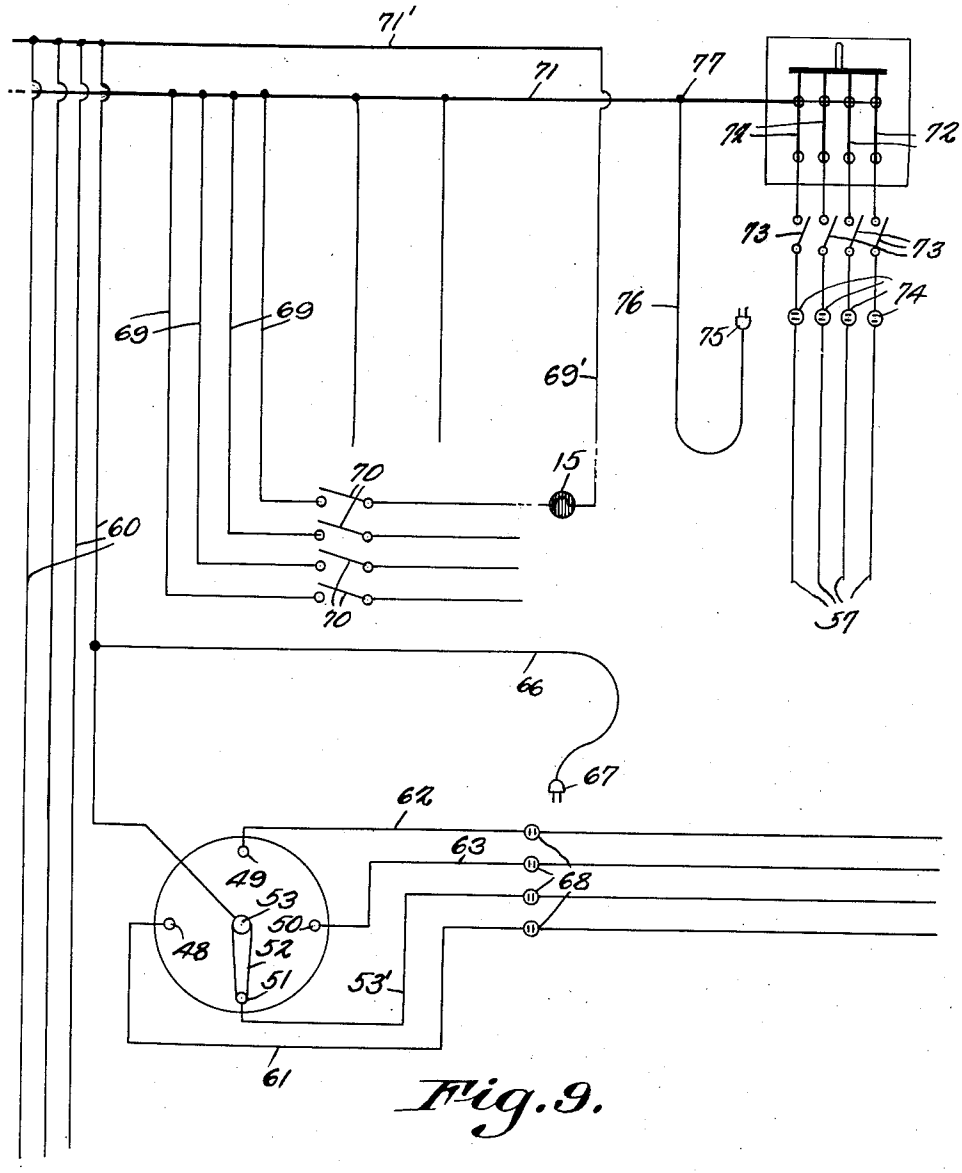

Fig. 9.

Inventor

H. B. Shaw

By C. A. Snow & Co.

Attorneys.

Patented May 9, 1939 2,157,636

UNITED STATES PATENT OFFICE

2,157,636

MOTOR CONTROL SYSTEM FOR A TRAFFIC SIGNAL

Henry B. Shaw, Fort Smith, Ark.

Application November 25, 1935, Serial No. 51,510

2 Claims. (Cl. 172—239)

This invention relates to automatically controlled traffic signals, the primary object of the invention being to provide a signal including mechanism which will operate to rotate the signal at intervals, indicating the direction of travel to be taken by the vehicles approaching the intersection where the signal is located.

An important object of the invention is the provision of means in addition to the usual traffic light control, for indicating the direction of travel of fire engines, ambulances, or other emergency vehicles moving over the highway where the traffic signal is located.

Another object of the invention is to provide a motor for operating the rotary signal and electrically controlled braking means adapted to stop the motor when a signal has been made, thereby insuring against the motor overrunning and causing an improper signal to be displayed.

With the foregoing and other objects in view, which will appear as the description proceeds, the invention resides in the combination and arrangement of parts and in the details of construction hereinafter described and claimed, it being understood that changes in the precise embodiment of the invention herein disclosed may be made within the scope of what is claimed without departing from the spirit of the invention.

Referring to the drawings:

Figure 1 is a longitudinal sectional view through a signal housing and signals mounted therein.

Figure 2 is a sectional view taken on line 2—2 of Figure 1.

Figure 3 is a sectional view taken on line 3—3 of Figure 1.

Figure 4 is an elevational view illustrating the members.

Figure 5 is a vertical sectional view through the lower portion of the signal housing and illustrating the mechanism for controlling the movable signals.

Figure 6 is a sectional view taken on line 6—6 of Figure 5.

Figure 7 is a diagram illustrating the various electrical circuits and indicating the switch, in circuit with the motor as open, and the switch in circuit with the brake closed.

Figure 8 is a diagram illustrating the circuit to the motor as open, the circuit to the brake open, and the circuit to the white light of the signal as closed.

Figure 9 is a diagram illustrating the circuit controlling the emergency signal.

Referring to the drawings in detail, the signal box is indicated generally by the reference character 5, and is adapted to be positioned at street or highway crossings where it will be clearly visible by operators of vehicles moving in either direction. The signal box is divided by the horizontal partitions 6 and 7 which define an upper compartment 7', an intermediate compartment 8 and a lower motor compartment 9. Openings are provided in the side walls of the upper compartment 7' and intermediate compartment 8, the openings being covered by clear glass indicated at 10.

Mounted within the signal box 5 is a vertical shaft 11, that has its ends disposed in bearings 12, provided at the upper and lower ends of the signal box. Bearings 13 also support the shaft 11, and are mounted on the partitions 6 and 7, as clearly shown by Figure 1 of the drawings. Secured to the shaft 11 and disposed within the upper compartment is an emergency signal member 14, which has a closed top and an open bottom whereby the red lamp 15 and amber colored lamp 16, supported on the partition 6, may project light rays into the signal member illuminating the interior thereof. The walls at opposite sides of the signal member 14, are formed with cut out portions 17 indicating arrows pointed downwardly while the remaining side walls of the signal member 14 are formed with horizontally disposed arrows 18. As will be explained, the arrows 18 indicate the direction of travel of the emergency vehicles, while the arrows 17 stop the traffic operating across the path of travel of the emergency vehicles.

Arranged within the intermediate compartment 8, is a signal member 19 which is also secured to the shaft 11 and this signal member has its bottom closed while the top thereof is open so that the white lamp 20 supported on the partition 6 will extend into the member 19 illuminating the signal.

Cut out portions are formed in the wall of the signaling member 19 and are in the form of arrows indicating direction. As shown, the arrows 20' are colored red and indicate that traffic may move in one direction, while the double arrows 21 are colored green and are directed in such a way to indicate that traffic may make a right or left turn.

Secured to the shaft 11 is a gear 22 that meshes with the worm gear 23, mounted on the forward end of the motor shaft 24 of the motor 24', to the end that rotary movement of the shaft 24 will operate to rotate the shaft 11 and consequently move the signals mounted thereon, to accomplish the purpose of the invention.

The reference characters 25, 26, 27 and 28 designate electro-magnets that are arranged within the motor compartment and are disposed at points intermediate the side edges of the compartment, for purposes to be hereinafter more fully described.

Clamp 29 is secured to the shaft 11 and rotates therewith, the clamp providing a support for the switch arms 30 and 31 that carry contacts 32 and 33 respectively, at their outer ends. Pivotally mounted on the clamp 29, and operating between the contacts 32 and 33, is a switch arm 34 carrying the double contact member 35 adapted to complete a circuit with either of the contacts 32 or 33.

An armature 36 is mounted at the outer end of the arm 34 and is adapted to be attracted by the electro-magnet directly under the arm, moving the arm and breaking the circuit between the contact member 32 and contact member 35, and completing the circuit through the contact members 33 and 35. After the circuit has been completed for a predetermined period, the magnet becomes deenergized and the spring 36' secured to the arm, will snap the arm back to its normal position, again completing the circuit to the motor.

Housed within the motor compartment 9, are switch members 37 and 38 adapted to be engaged by the switch member 39, carried at the free end of the pivoted arm 40 to which the core 41 of the solenoid 42 is secured. Thus it will be seen that when the core is attracted by the solenoid, the switch member 39 will be moved to engage the switch member 38, completing the circuit. When the solenoid is deenergized the core will drop, moving the switch member 39 into engagement with the switch member 37, completing the circuit, and operating to break the first mentioned circuit.

Contact rings 43 are mounted on the shaft 11, and are engaged by the contact brushes 44, the rings and brushes being in circuit with the various switch members, so that electrical current may pass to the switch members, as the shaft 11 rotates.

Associated with the motor 24' are magnets 45 that cooperate with the rotor 46, mounted on one end of the motor shaft 24 with the result that when the magnets 45 are energized, they will act upon the rotor 46, retarding movement of the motor shaft to prevent overrunning of the shaft after the current to the motor has been cut off.

The circuits are controlled by the time-controlled switch mechanism indicated generally by the reference character 47 which embodies contact members 48, 49, 50, and 51, which are engaged by the switch arm 52, mounted on time controlled shaft 53, operated by a suitable mechanical motor not shown. The wire 53' connects with the contact member 51 and provides a circuit between the magnet 26 and contact member 51. The wire 54 provides a circuit between the magnet 26 and solenoid 42, so that when the magnet 26 is energized the solenoid 42 will also be energized, moving the switch 40 to complete the circuit to the amber lamp 16, the circuit between the switch 40 and amber lamp 16 being made through the wires 55 and 56, the return wire of the circuit being indicated by the reference character 57. The amber light, being the caution light, holds the traffic temporarily while the signals are being changed. When the solenoid 42 is deenergized the switch 40 moves to complete the circuit to the white lamp 20 illuminating the arrows of the signal, and indicating the direction to be taken by the traffic. Wire 58 provides the circuit between the white lamp 20 and switch 40. Wire 59 connects with the switch 40 and also connects with the power line 60, supplying electric energy to the circuit.

When the switch arm 52 moves into engagement with the contact member 48, the circuit to the magnet 27 is completed through the wire 61, the return circuit being through the wires 54 and 60. It will of course be understood that the switch arm 52 is timed so that the arm 34 will be in a position directly over the magnet which is energized, so that the arm 34 will be attracted, breaking the circuit to the motor, temporarily stopping the signal.

When the switch arm 52 moves to a position engaging the contact member 49 the circuit to the motor 24' is completed, rotating the motor. The magnet 28 is also energized. As the arm 34 moves to a position over the magnet 28, the arm is attracted, breaking the contact to the motor at 32 and 35, stopping the signal. The circuit to the magnet 28 is made through 60, arm 52, contact 49 and the wire 62 the return circuit being made through wire 63 which connects with the wire 54 that in turn is connected with the power line 57. As the contact arm 52 moves from the contact member 49 and engages the contact member 50, the magnet 25 will be energized again operating the arm 34 to control the signal, the circuit being completed through the wire 60, arm 52, wires 63, 54, and 57.

With each operation of the arm 34, the arm 40 is moved to complete a circuit through the contact members 33 and 35, wires 64 and 65, to the magnets 45, whereupon the rotor 46 will be attracted by the magnets 45, instantaneously stopping the motor shaft 24, preventing the motor overrunning.

The circuit controlling the emergency signal is shown by Figure 9 of the drawings and includes the wire 66 that connects with the wire 60, at a point beyond the connection between the wire 60 and switch arm 52. The wire 66 is provided with a plug 67 which is adapted to be plugged into any one of the sockets 68 which are disposed in the circuits between the contact members 48, 49, 50 and 51, and their respective magnets, to the end that by inserting the plug in any one of the sockets, that particular circuit in which the socket is located will be in direct circuit with the source of current supply, independently of the time controlled switch 47, the circuits to the remaining magnets being broken. When this condition occurs, a selected magnet becomes energized, and when the arm 34 moves to a position directly over the energized magnet, the armature of the arm is drawn into engagement therewith breaking the switch to the motor 24' causing the signal to stop at its proper signaling position.

Wires 69 and 69' provide circuits between the power wires 71 and 71' and red lamps 15 of the signals, the wires 71 and 71' being in circuit with the source of current supply. Manually controlled switches 70 are in the circuits formed by the wires 69 and afford means whereby any one of the circuits leading to a red lamp may be closed, lighting the red lamp in a particular signal indicating danger, and stopping traffic in one direction.

The circuits to the motors 24' of the signals, include wires 71 and 71' that are normally in

circuit with the wires 57 through the master switch 72 and manually controlled switches 73, there being provided a switch 73 for each of the circuits to the motors, see Figure 9. The switches 73 constitute the emergency switches controlling the circuits to the motors with the result that when it is desired to operate any particular signal, this may be accomplished by completing the circuit to that particular motor, by merely closing the switch 73 in that circuit.

Sockets 74 connect with the wires 57 constituting the motor circuits, and are disposed between the switches 73 and motors 24'. These sockets are designed to receive the plug 75 connected at one end of the wire 76 which in turn connects with the wire 71 supplying current to the motor, at 77. Thus it will be seen that should it be desired to operate the motor of a particular signal for operating the signal the master switch 72 is operated breaking the circuits to the motors of all of the signals, whereupon the plug 75 is inserted in the particular socket of the circuit leading to the motor to be operated. Current now passes directly from the wire 71 to one of the wires 57, independently of the switches 72 and 73. In this way the operator may cut out all of the signals, and by the use of the plug 75, complete the circuit to a particular traffic signal.

In order that the attendant or person controlling the operation of the signal will know when the emergency vehicle has passed a particular signal so that he may again set the signal for normal operation, a microphone 77' is disposed at each signal, the microphone being in circuit with the receiver 78 located at the office of the attendant, through the wires 79. The attendant hearing the noise of the vehicle passing the particular signal is informed that normal traffic at this point may be resumed and the attendant may accordingly reset the signal for operation.

The operation of the device is as follows:

For example, it may be assumed that arm 34 is over magnet 25 and arm 52 has just left contact 50, the arm 52 being mounted to operate in clockwise direction. When arm 52 leaves contact 50, as presumed, magnet 25 is deenergized restoring the part of the motor circuit between contacts 32 and 35, but relay 42 is also deenergized thereby opening the motor circuit at contact 38.

When arm 52 reaches contact 51, magnet 26 and relay 42 are energized. However, inasmuch as arm 34 is in a position over magnet 25 energization of magnet 26 has no effect as yet on arm 35. Energization of relay 42 attracts this armature closing contacts 38 and 39, thereby establishing the motor circuit which can be traced from power lead 60, through lead 59, contact 38, middle brush 44, contacts 35 and 32, upper brush 44, motor 24' to the other power lead 57. The motor 24' rotates the shaft 11 ninety degrees (90°) or until arm 34 is over energized magnet 26, whereupon arm 34 is attracted and opens the motor circuit at 32—35. These circuits may be traced by considering Figure 7 of the drawings. Obviously the speed of rotation of arm 52 must be such that it remains in contact with the member 48—51 while the shaft 11 is making a quarter revolution. After arm 52 leaves the contact 51, the circuit to the magnet 26 is broken and the magnet deenergized, restoring the motor circuit between contacts 32 and 35. Relay 42 is simultaneously deenergized causing the breaking of the motor circuit at contact 38. As the arm 52 continues to rotate and engages contact 48, the circuit to the motor is made through the wire 61, relay 27, relay 42, which attracts the arm 40. The current now flows through the power line 60, wire 59, contacts 38 and 39, through the central brush 44, through the contacts 32 and 35, through the upper brush 44 to the motor 24'. The motor is now set in motion rotating the arm 34 until the arm is directly over magnet 27, whereupon arm 34 is attracted by the magnet, breaking the motor circuit at contacts 32—35.

As the arm 52 continues to operate it engages the contact 49 completing the circuit to the magnet 28 energizing the magnet 28 as well as the relay 42 which operates the switch member 40 completing the circuit to the motor 24' through the wire 55, central brush 43, contacts 32—35, and the upper brush 43. As the shaft 11 continues to rotate the arm 34 moves to a position over the energized magnet 28. The arm 34 is moved downwardly by the action of the magnet 28, breaking the circuit to the motor through the contacts 32—35, temporarily stopping the signal member displaying a signal. The operation of the time controlled switch arm 52 continues, repeating the operation of the signal, as described.

Having thus described the invention, what is claimed is:

1. A traffic signal comprising a vertical shaft mounted for rotary movement, a motor for operating the shaft, horizontal switch arms mounted on the shaft to rotate therewith, one of said arms being pivotally mounted, switch members on the switch arms, wires providing a circuit between one of the switch members and motor, normally closing the motor circuit operating the motor, an armature on the free end of the pivoted switch arm, magnets disposed under the arms and arranged in a circular path directly below the path of travel of the pivoted arm to attract the armature thereof, wires providing circuits between a source of electricity supply and the magnets, means for completing the circuit to the magnets at intervals attracting the armature and breaking the circuit to the motor periodically stopping the shaft, and means for returning the pivoted switch arm to its normal position completing the circuit to the motor, when the circuits to the magnets are broken.

2. A traffic signal comprising a vertical shaft, an electrical motor operating the shaft, wires providing an electrical circuit to the motor, a switch arm extending laterally from the shaft, a contact member on the switch arm, said contact member being in circuit with the motor, a movable switch arm, a contact member on the movable switch arm, means for moving the movable switch arm normally completing the circuit to the motor, and electrically controlled means for moving the latter switch arm periodically breaking the motor circuit.

HENRY B. SHAW.