US 20120004083A1

(19) **United States**

(12) **Patent Application Publication**

Cuba

(10) **Pub. No.: US 2012/0004083 A1**

(43) **Pub. Date: Jan. 5, 2012**

(54) **FOLDABLE PRONE SUPPORT**

(76) Inventor: **Gerardo Simon Cuba**, Cagliari (IT)

(21) Appl. No.: **13/176,873**

(22) Filed: **Jul. 6, 2011**

Related U.S. Application Data

(63) Continuation-in-part of application No. 29/359,715, filed on Apr. 14, 2010, now Pat. No. D,642,412.

Publication Classification

(51) **Int. Cl.**
A63B 26/00 (2006.01)

(52) **U.S. Cl.** **482/142**

(57) **ABSTRACT**

A device is disclosed that provides for relaxation and back stretching. In particular, the device allows the user to assume a position similar to the prone fetal position, often referred to as the "balasana" or "child's pose" in yoga. The device provides additional advantages over traditional ways of assuming the "child's pose" by providing support for the user's body which relieves the stress caused at the point of contact between the floor and the user's feet, knees and ankles. A cavity is disposed for accommodating the user's face, allowing for comfortable breathing. Further, the facial cavity supports the user's head in such a way as to align the spine while stretching. The device of the invention utilizes gravity to enhance the stretch of the user's back and spine over the traditional "child's pose" without placing the user of the device in an unnatural or uncomfortable position. The device folds into an aesthetically pleasing cube for easy storage or for use as a support surface for sitting or as a table.

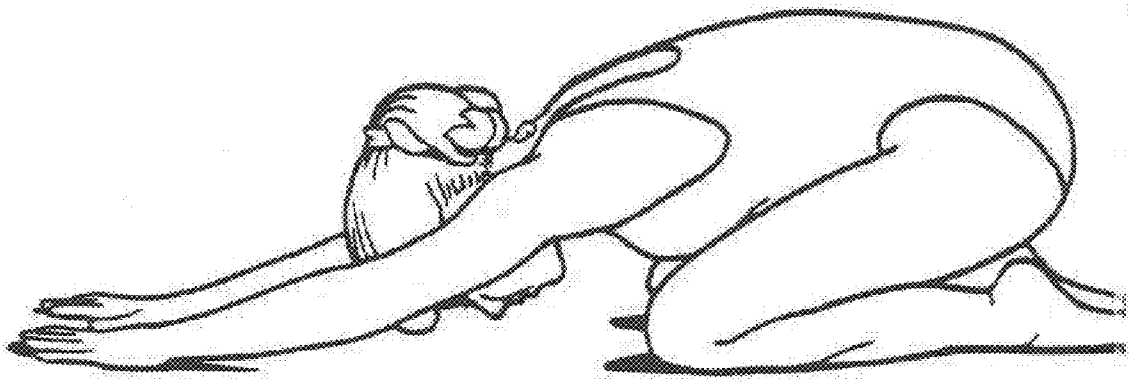

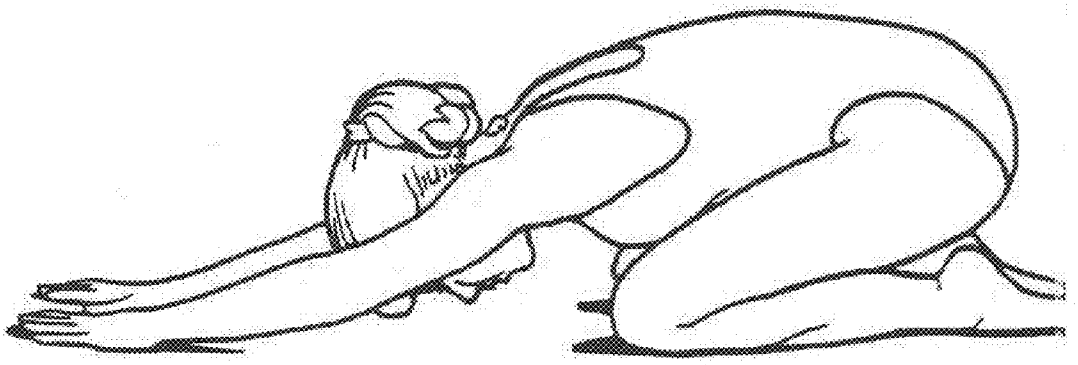

FIGURE 1A

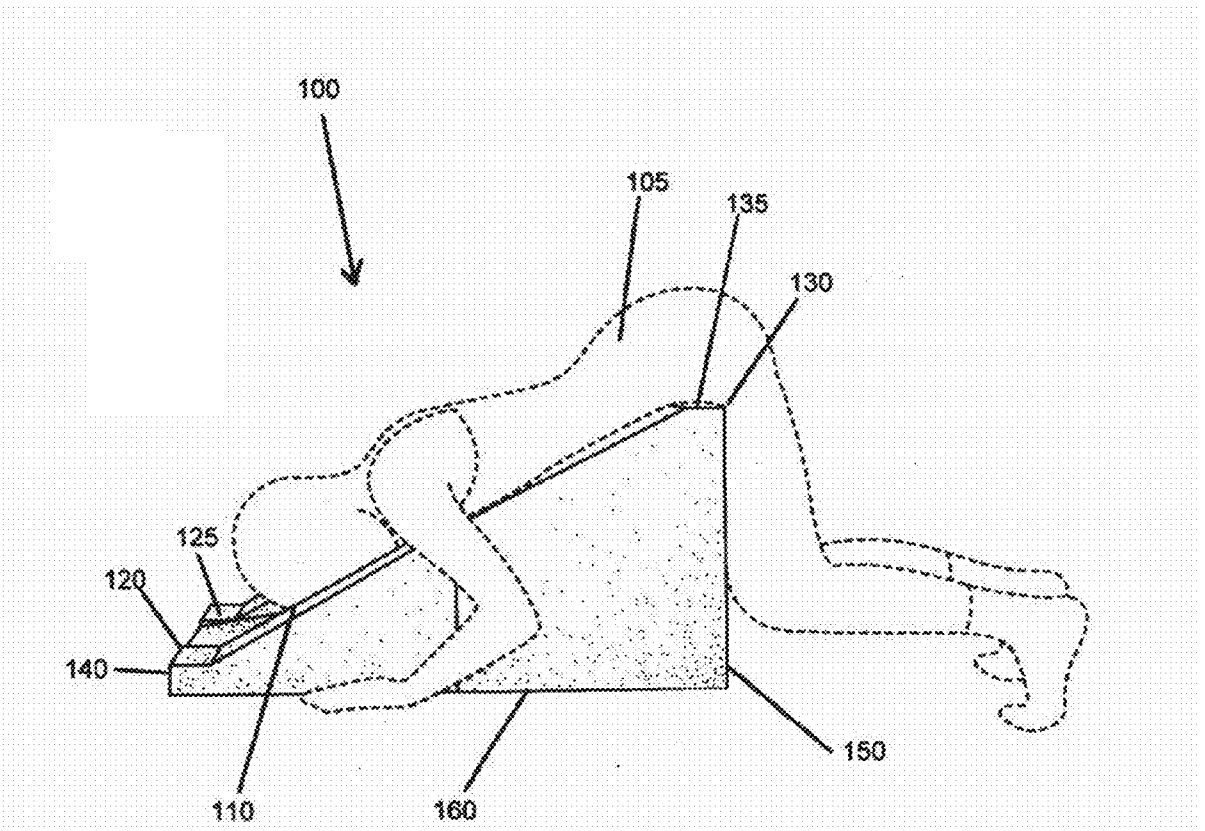

FIGURE 1B

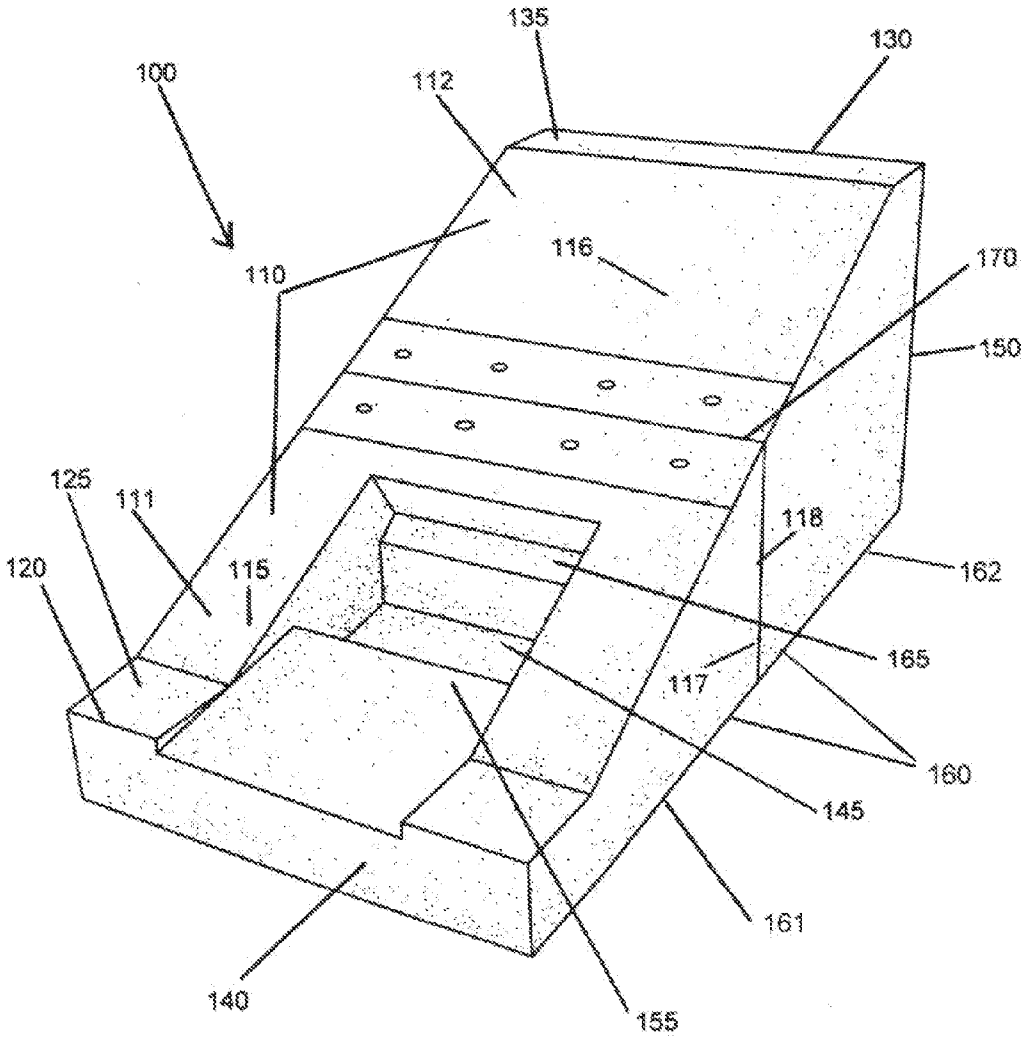
100
135
130
112
110
116
170
150
125
111
118
120
115
162
165
117
160
145
161
140
155

FIGURE 2A

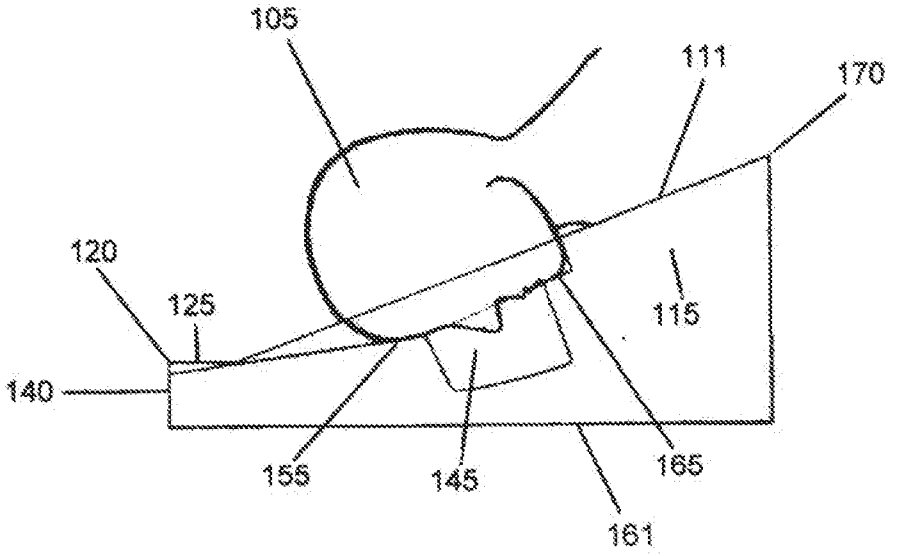

FIGURE 2B

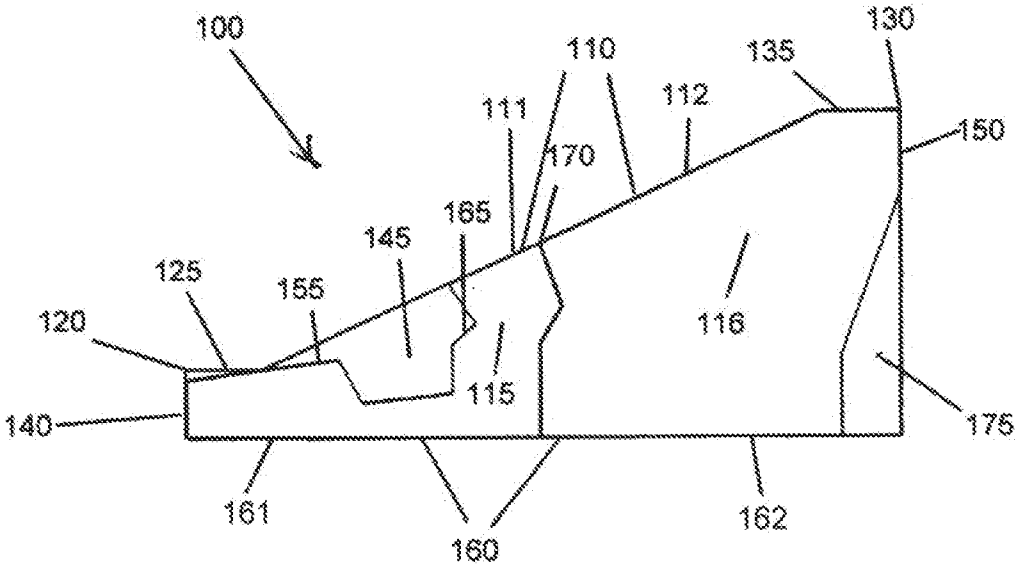

FIGURE 2C

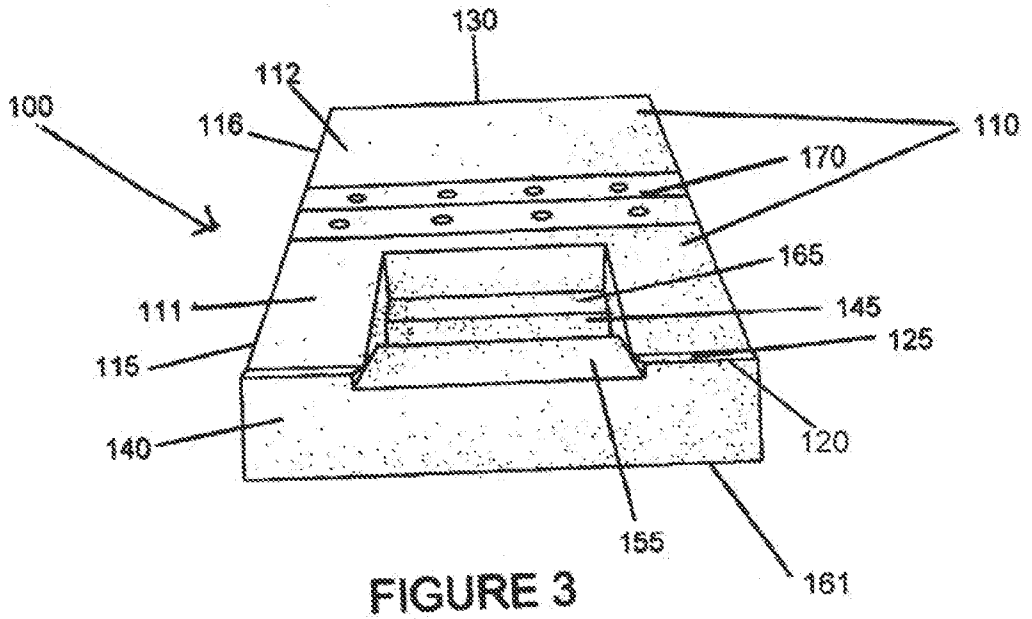

FIGURE 3

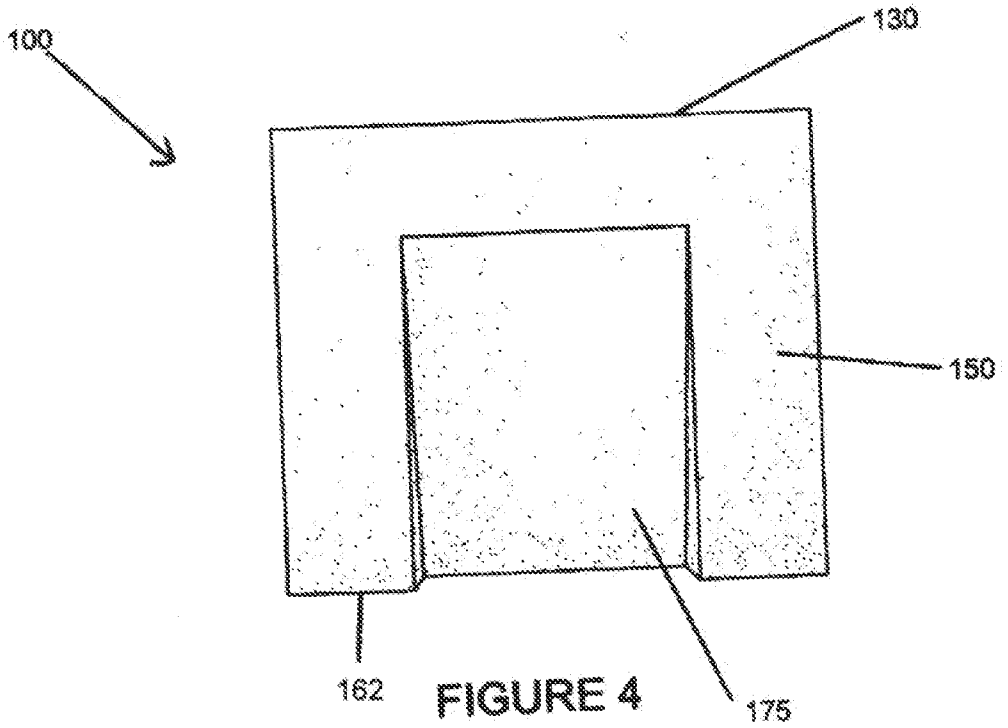

FIGURE 4

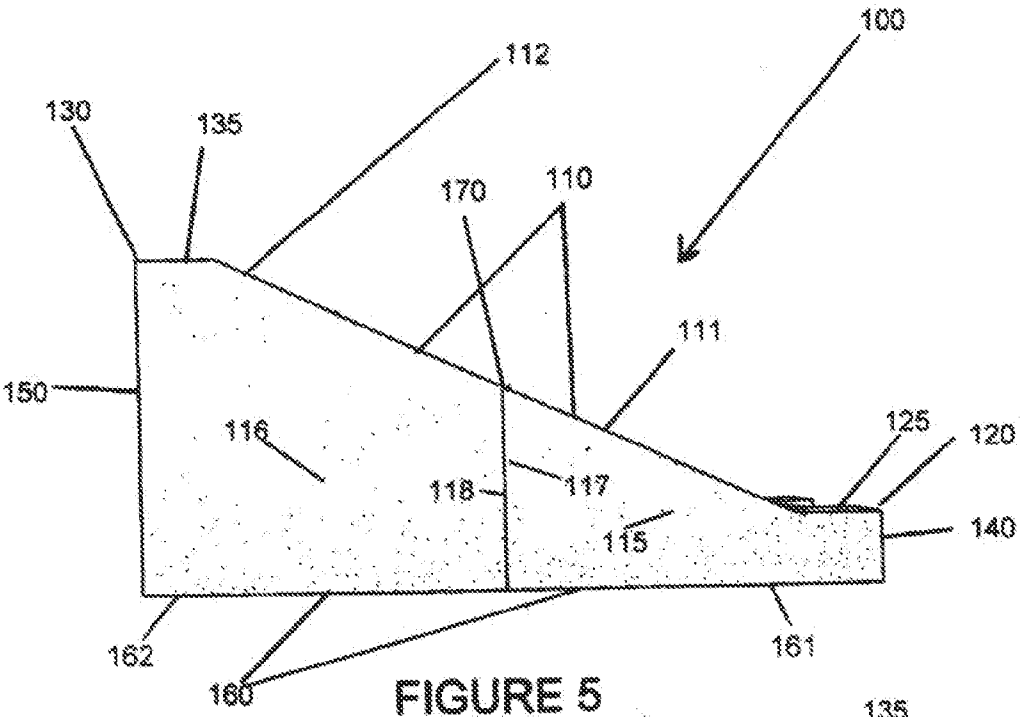

FIGURE 5

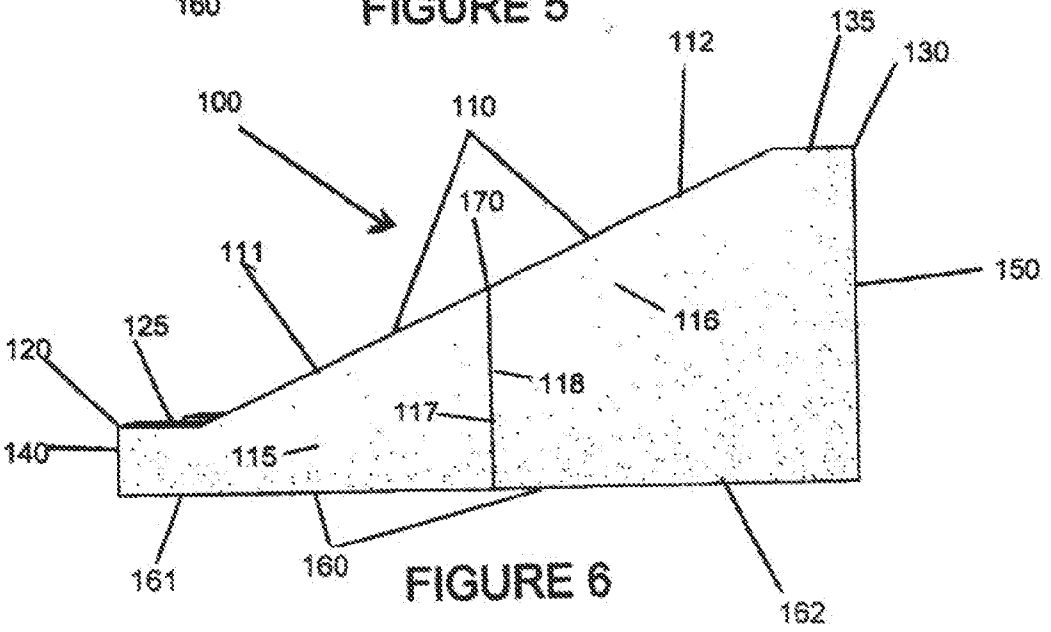

FIGURE 6

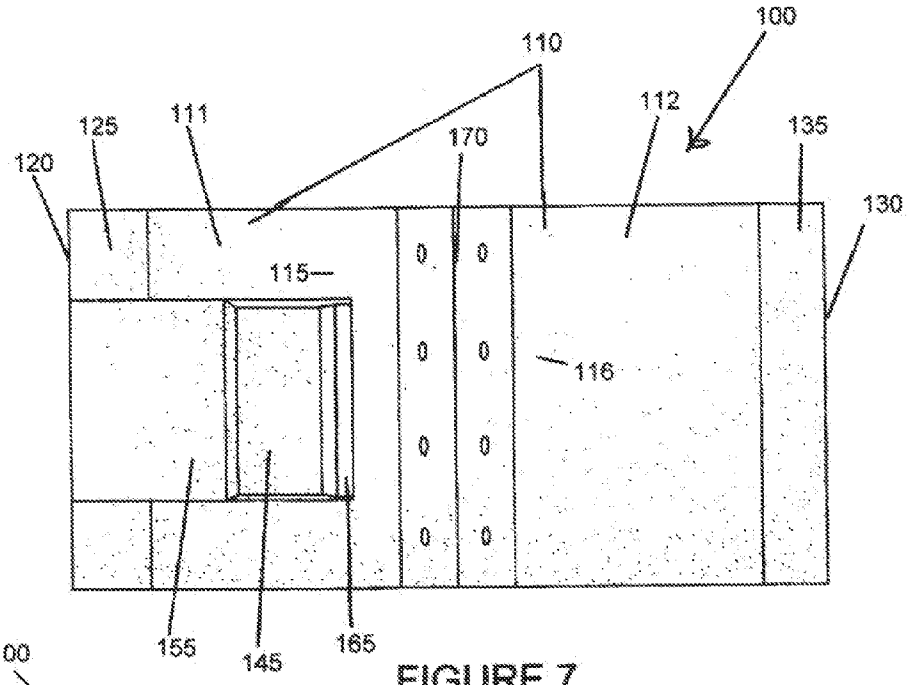

FIGURE 7

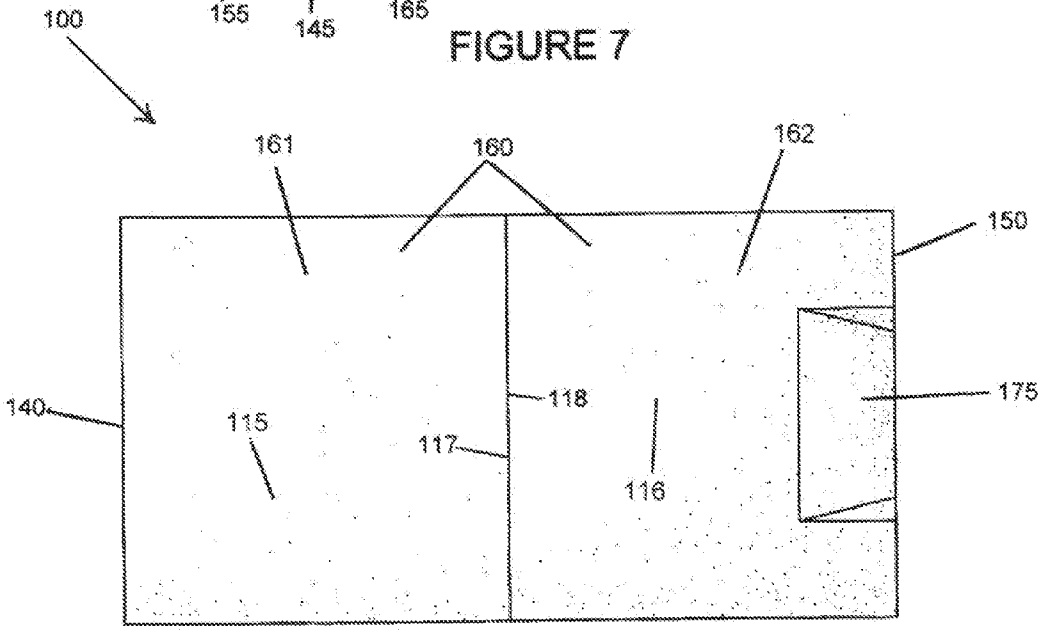

FIGURE 8

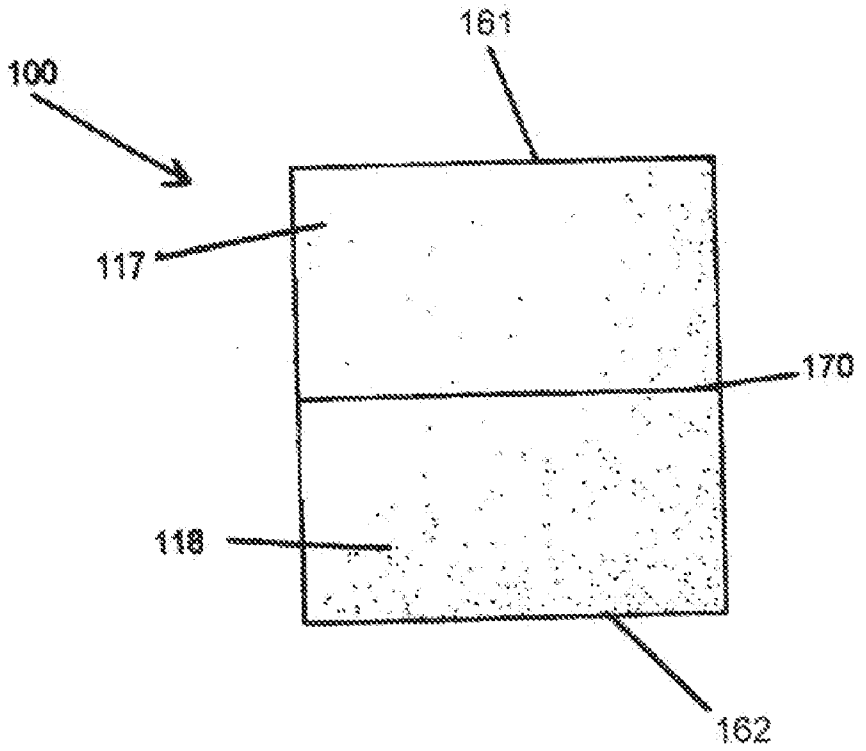

FIGURE 9

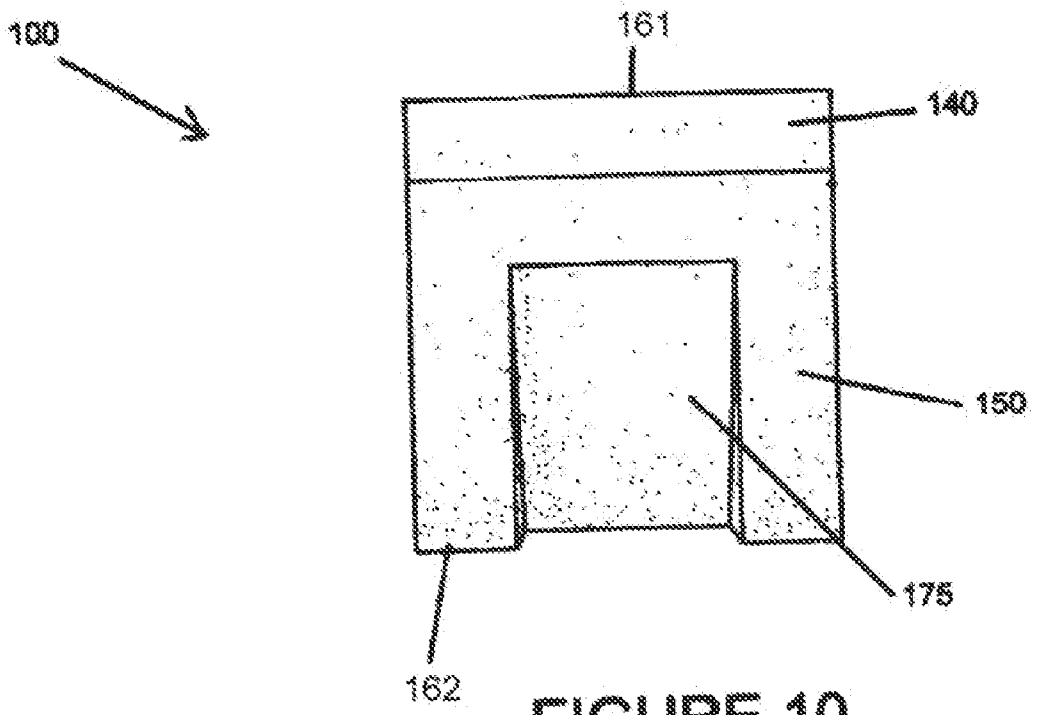

FIGURE 10

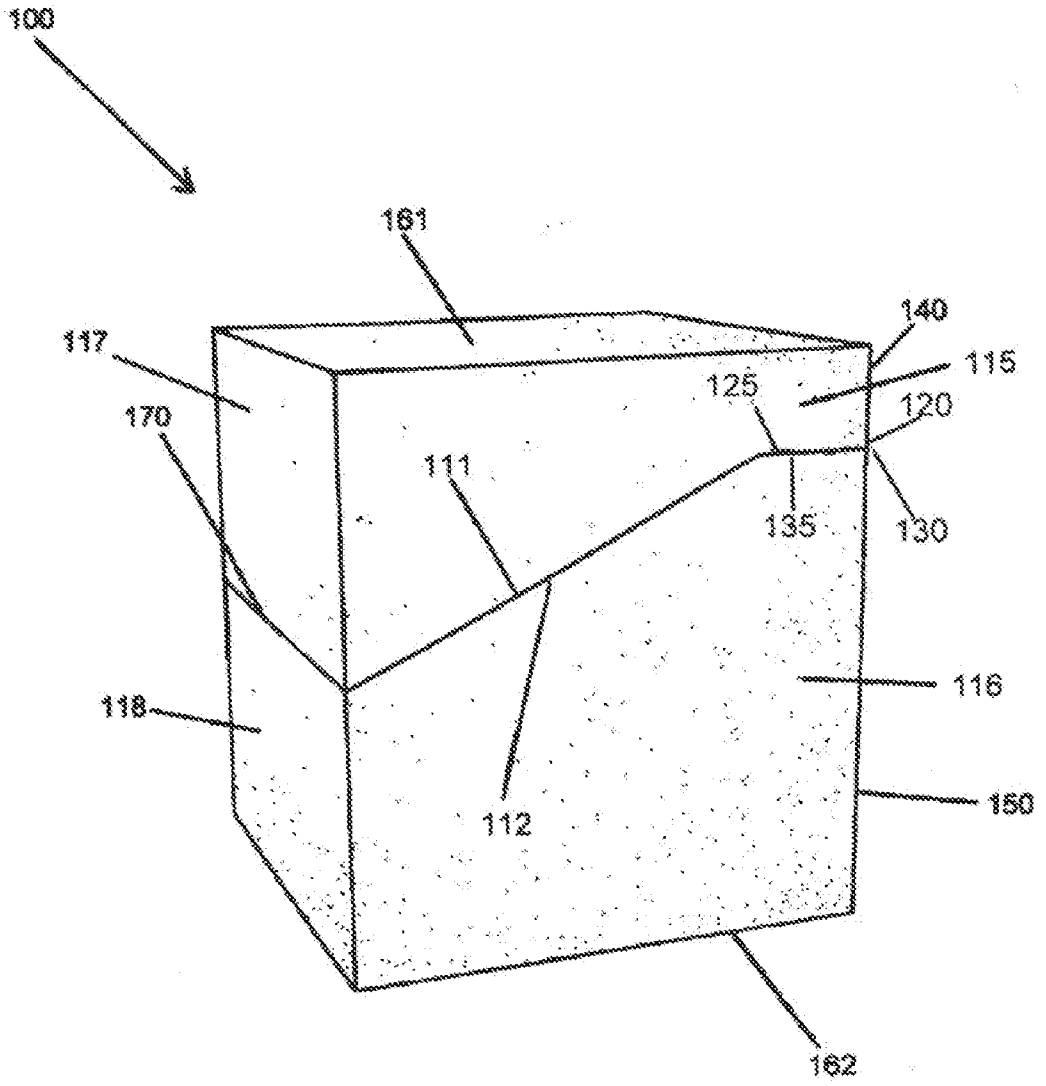

FIGURE 11A

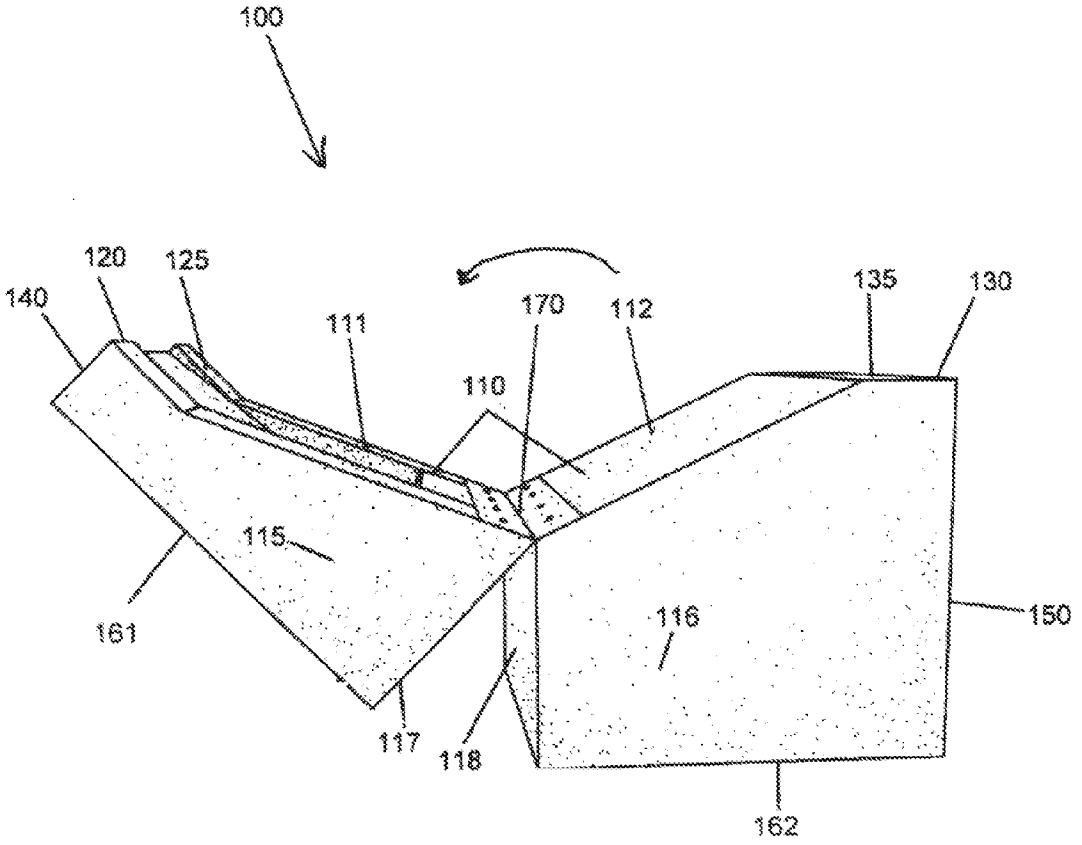
100
120
125
140
111
170
112
135
130
110
115
161
116
150
117
118
162

FIGURE 11B

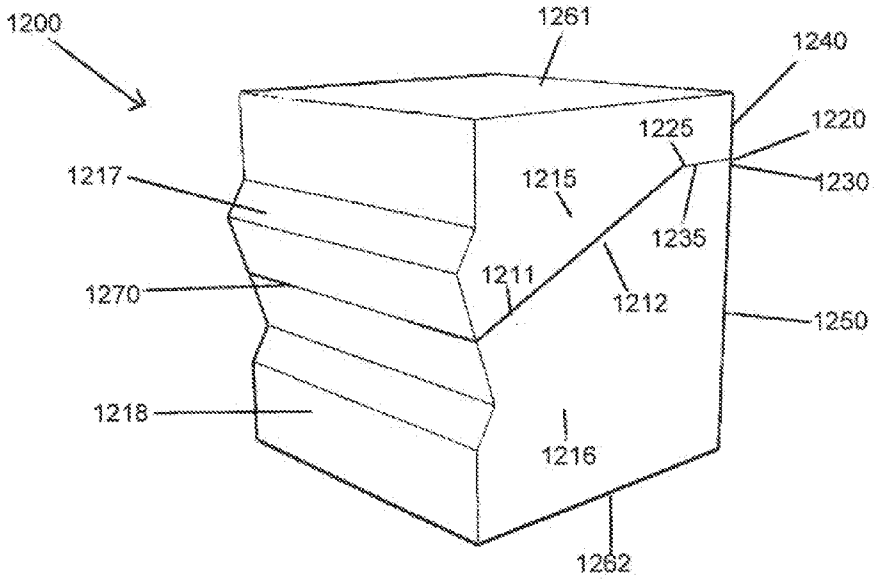

FIGURE 12A

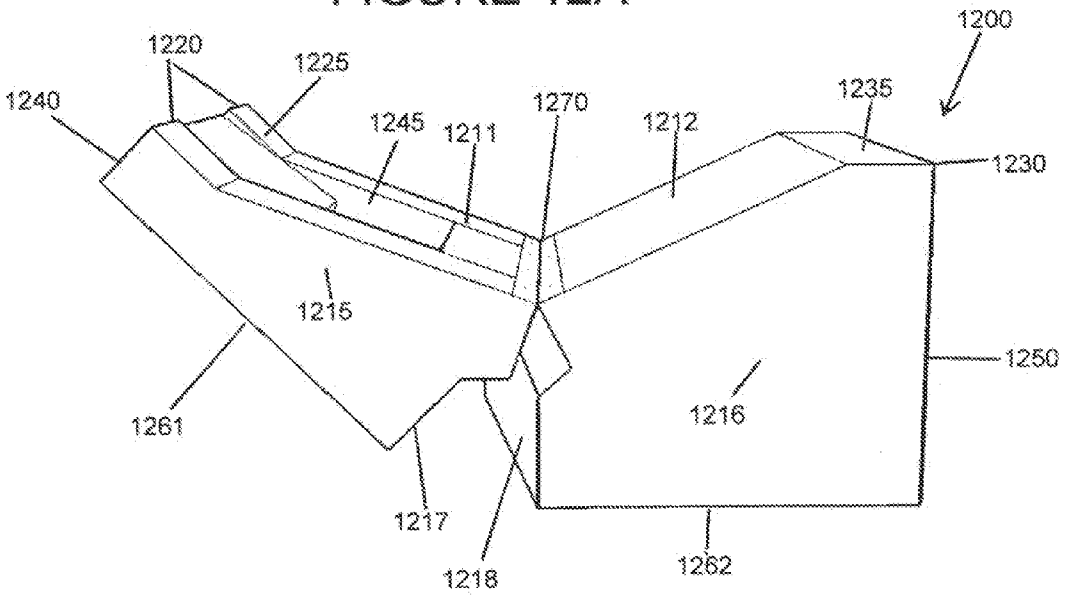

FIGURE 12B

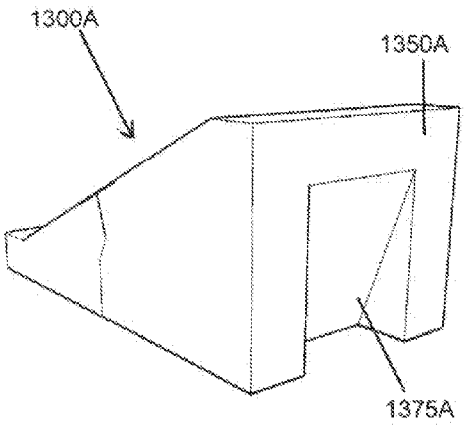

FIGURE 13A

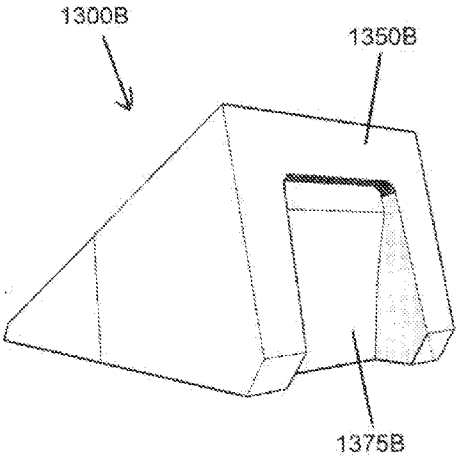

FIGURE 13B

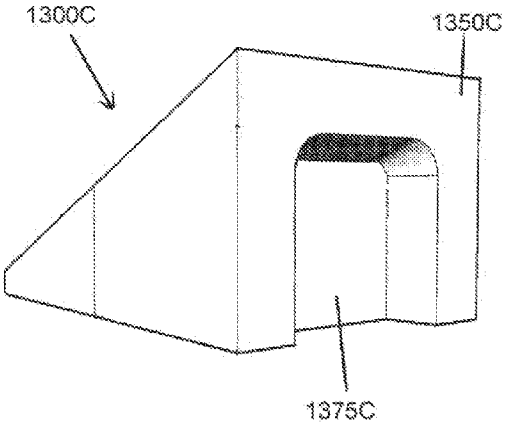

FIGURE 13C

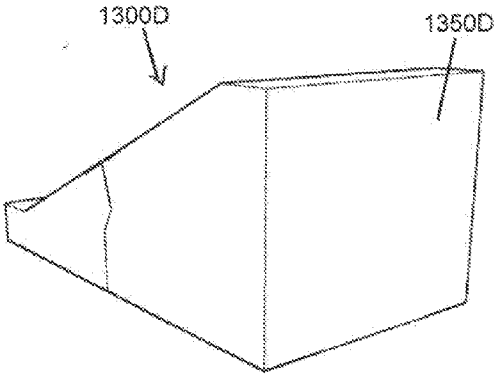

FIGURE 13D

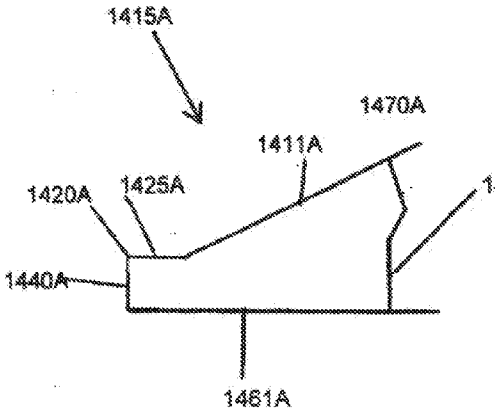

FIGURE 14A

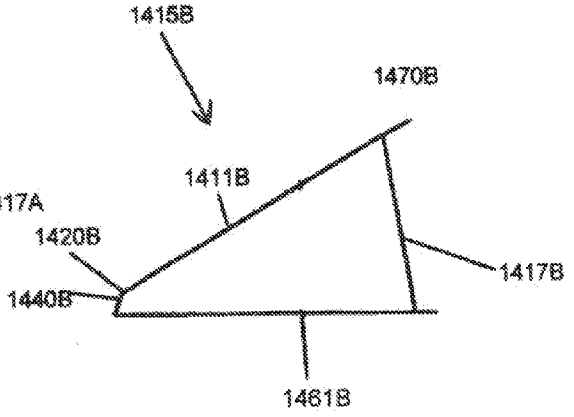

FIGURE 14B

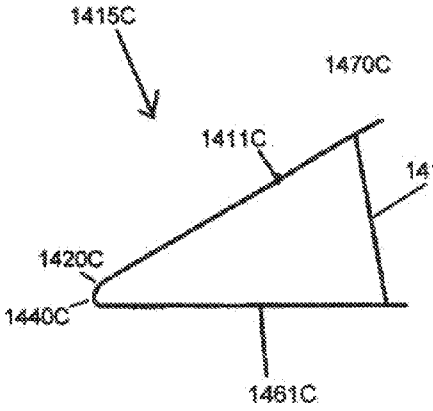

FIGURE 14C

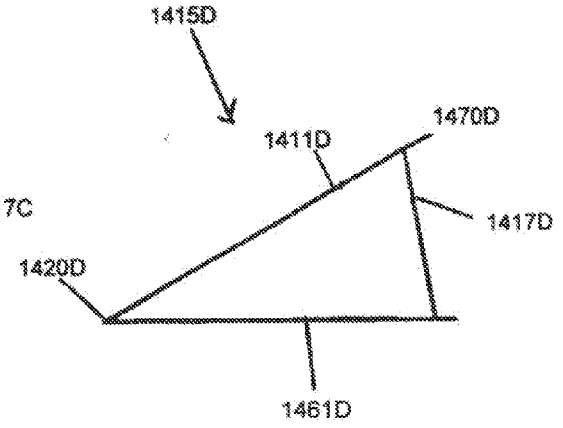

FIGURE 14D

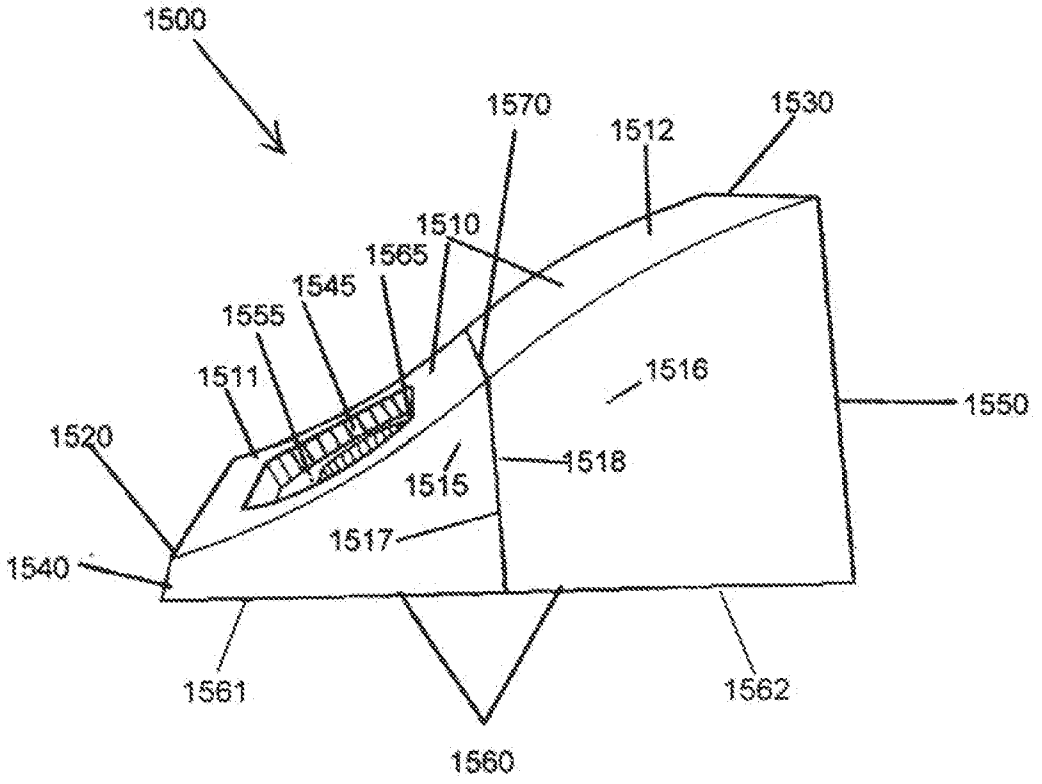
1500
1570
1512
1530
1510
1565
1545
1555
1511
1516
1550
1520
1518
1515
1517
1540
1561
1562
1560

FIGURE 15

FOLDABLE PRONE SUPPORT

RELATED APPLICATION

[0001] This application is a continuation-in-part of U.S. Design patent application Ser. No. 29/359715, filed on Apr. 14, 2010 and titled FOLDABLE PRONE SUPPORT, the contents of which are herein incorporated by reference in its entirety.

FIELD OF THE INVENTION

[0002] The invention generally relates to a foldable prone support for relaxation and back stretching. In particular, the invention relates to a device that allows the user to assume a position similar to the prone fetal position, often referred to as the "balasana" or "child's pose" in yoga. The device provides additional advantages over traditional methods of assuming the "child's pose" by supporting the user's body which relieves the stress caused at the point of contact between the floor and the user's feet, knees and ankles. Further, the device of the invention utilizes gravity to enhance the stretch of the user's back and spine over the traditional "child's pose" without placing the user of the device in an unnatural or uncomfortable position. A cavity is disposed for accommodating the user's face, allowing for comfortable breathing. The facial cavity supports the user's head in such a way as to align the spine while stretching. The device folds into an aesthetically pleasing cube for easy storage or for use as a support surface for sitting or as a table.

BACKGROUND OF THE INVENTION

[0003] Stress is an inevitable everyday occurrence for most people, with demanding jobs, unreasonable deadlines, family feuds, rising cost of living, etc. Advances in modern technology provide great advantages, but they bring more competition, quicker deadlines, more demanding customers and most importantly, change. People don't like changes because that means dealing with risk and "unknown," which are main causes of stress.

[0004] There is a strong connection between stress and back pain. Stress causes a release of stress hormones, which increase the perception of pain. Stress hormones also cause the muscles to tighten up and can lead to spasms. Back and neck muscles are particularly sensitive to the effects of stress.

[0005] Muscle tension reduces blood flow to the tissues (reduced oxygen and nutrients to the tissues) which then delays healing. Adequate circulation is also necessary to flush acidic waste products (byproducts of muscular activity) from the tissues. A build up of acidic waste products in the tissues can cause fatigue and pain.

[0006] Stress in itself can cause back pain. A person with a "bad back," e.g. a person who has scar tissue from an old injury or degenerative changes in the spine due to aging, may notice the effects of stress triggering back pain even more than someone with a healthy back. The slightest muscle tension can compress nerves and cause pain for spinal nerves that are already restricted by scar tissue or calcium deposits. Sciatica is known to occur when one is feeling stressed. Tense back muscles increase back pain, which in turn increases tensing of muscles and causes a vicious cycle of stress and back pain.

[0007] Relieving stress can reduce pain that is aggravated or caused by tense muscles. Relaxation techniques invoke the "relaxation response," where muscles relax and blood pressure, heartbeat, and respiration decrease. There are many known relaxation techniques, including deep breathing exercises, meditation, progressive muscle relaxation, biofeedback, massage therapy, exercise and stretching.

[0008] Special equipment is needed for biofeedback and it must be taught by a professional. Biofeedback involves using machines to monitor subtle changes in the body, such as skin temperature, muscle tension, heart rate, blood pressure, etc. By monitoring subtle changes in the body's autonomic functions, a person can learn what technique works to produce the desired result.

[0009] Massage therapy is very beneficial for relaxing muscles, increasing circulation, and relieving stress. Regular massage can help manage stress and back pain. Soaking in warm water relaxes the muscles and has a calming effect.

[0010] Exercise, and aerobic exercise in particular, burns off stress hormones and increases the body's production of endorphins, which are naturally occurring chemicals that relieve pain and improve mood.

[0011] Stretching is a crucial component of any workout routine. It relieves stress and loosens tight muscles. Back stretches help to loosen the back muscles and prevent tears and other injuries. Stretching also helps to lengthen the muscles and reduce the amount of pressure placed on the spine. Good stretching exercises can improve poor posture and relieve chronic back pain. Stretches can increase flexibility and range of motion around the joints. It can also help to prevent the joints from degenerating. By relieving tension in the muscles through stretching, more oxygen flows to the muscles to increase circulation. Stretching elongates and opens up the body. Back stretches can open up the chest and allow for easier breathing. By eliminating tension in the back, stretches can drastically reduce overall stress level. Since stress is a contributing factor to most chronic illnesses, it can also improve overall health.

[0012] Many people practice yoga, which incorporates poses that increase strength and flexibility with breathing techniques to relieve stress. The "child's pose" (see below) (also known in Indian tradition as "balasana") is a good yoga position for relaxing in when fatigued and stressed. While in the "child's pose," the knees increase in flexibility and blood flows into the head. The "child's pose" stretches the knees and the lower back. By opening the knees, more room is created around the belly which also allows for deeper breathing.

[0013] Unfortunately, it is not easy for everyone to perform the child's pose. Because the child's pose places pressure on the knees and ankles, people who have problems with those areas must avoid performing this position if adding pillows or towels cannot alleviate discomfort.

[0014] A number of devices have been developed to stretch the back that use gravity to enhance the stretch. For example, many versions of inversion tables are available. Many users find inversion tables to be uncomfortable. Back stretching must be stored or else are an eyesore in the room in which they are set-up and used. No back stretching devices are known that can be folded into an aesthetically pleasing object having other uses.

SUMMARY OF THE INVENTION

[0015] The invention is the result of the combination of a few basic natural principles for person wellness using the natural use of gravity energy as a primary stretching tool. The invention takes its principles from the "child's pose," a prone human body disposition that is well known in yoga, and in

many other cultures with many other names. The invention achieves a device that allows a person to maintain and comfortably hold the "child's pose" while using gravity and body weight to enhance stretching.

[0016] The invention comprises a unitary foldable device made of two complementary units, such as foam block units that can be reassembled into a substantially cube shape or opened into a substantially wedge shape. When the device is in its unfolded or wedge shape position, it comprises a method of stretching the back and spine of a user who lies prone over its sloped top planar surface. Further a face cavity is provided on the body supporting top planar surface to secure the alignment of the spine in its entirety while enabling the user to breathe comfortably during performance of the stretch. None of these features require ties or belts to secure the user to the device outside of the designed supporting contour surface of the device itself.

[0017] Additionally, the secondary cube shape, folded position of the device offers alternative secondary uses for the device, as a pleasing and unusual design aspect for a back pain reliever. These and other advantages constitute a body support structure easy and safe to maneuver, easy and smart to storage.

[0018] These and other objects and advantages of the invention will be readily appreciable from the following description of the invention and from the accompanying drawings and claims.

DESCRIPTION OF THE DRAWINGS

[0019] The invention will be described with reference to the accompanying drawings, in which like elements are referenced with like numerals.

[0020] FIG. **1**A is a side view of a person in the "child's pose" yoga position (also known in Indian tradition as "balasana");

[0021] FIG. **1**B is a left perspective view of the device as used by a user according to one embodiment of the invention in its unfolded position;

[0022] FIG. **2**A is a front perspective view of the device according to one embodiment of the invention in its unfolded position;

[0023] FIG. **2**B is a side cut-away view of the face cavity of the device as used by a user according to one embodiment of the invention;

[0024] FIG. **2**C is a side cut-away view of the device in its open position according to one embodiment of the invention in its unfolded position highlighting the thigh cavity and face cavity, including forehead support and chin support;

[0025] FIG. **3** is a front perspective view of the device according to one embodiment of the invention in its unfolded position;

[0026] FIG. **4** is a back perspective view of the device according to one embodiment of the invention in its unfolded position;

[0027] FIG. **5** is a right perspective view of the device according to one embodiment of the invention in its unfolded position;

[0028] FIG. **6** is a left perspective view of the device according to one embodiment of the invention in its unfolded position;

[0029] FIG. **7** is a top perspective view of the device according to one embodiment of the invention in its unfolded position;

[0030] FIG. **8** is a bottom perspective view of the device according to one embodiment of the invention in its unfolded position;

[0031] FIG. **9** depicts a front view of the device according to one embodiment of the invention in its folded position.

[0032] FIG. **10** depicts a back perspective view of the device according to one embodiment of the invention in its folded position.

[0033] FIG. **11**A depicts a left perspective view of the device according to one embodiment of the invention in its folded position.

[0034] FIG. **11**B depicts a left perspective view of the device according to one embodiment of the invention in the process of being opened.

[0035] FIG. **12**A depicts a left perspective view of another embodiment of the device according to one embodiment of the invention in its folded position.

[0036] FIG. **12**B depicts a left perspective view of another embodiment of the device according to one embodiment of the invention in the process of being opened.

[0037] FIGS. **13**A to **13**D depict back perspective views of various embodiments of the back side of the device in its unfolded position.

[0038] FIGS. **14**A to **14**D depict various profile embodiments of the base end of the device.

[0039] FIG. **15** depicts an alternative embodiment of the device in its unfolded position.

DETAILED DESCRIPTION OF THE INVENTION

[0040] The invention generally relates to a device designed for relaxation and back stretching. In particular, the invention relates to a device that allows the user to assume and maintain a position similar to the prone fetal position, often referred to as the "balasana" or "child's pose" in yoga without the discomfort and limitations typically incurred in this position when performed on the floor. FIG. **1**A depicts a person in the "child's pose." Further, the device can be used as a support surface for other activities, such as a massage table.

[0041] The device comprises two complementary block units, manufactured from a material suitable to support the body weight of a user. The two complementary block units may be linked by means of a hinge system in order to switch into two principal different shapes. In its folded or secondary embodiment, the device comprises an aesthetically pleasing cube shape with a flat top surface suitable as table or to accommodate a sitting person. In one embodiment, the device comprises a hinge system that can be opened to conform a substantially wedge shaped device, comprising a plurality of cavities for accommodating the user's face, thighs and knees. In its unfolded and main substantially wedge shape embodiment, the device comprises an integral top planar surface which comprises a base end located substantially close to the floor, an upper end located at the opposite side of the integral top planar surface from the base end and an integral bottom planar surface. The base end may be substantially located at floor level, or a base end vertical surface may be situated between the base end of the integral top planar surface and the integral bottom planar surface. The upper end of the integral top planar surface is to be located at the opposite side from the base end at a distance relative to a person's trunk. An upper end vertical surface is situated between the upper end of the integral top planar surface and the integral bottom planar surface. The base end vertical surface is lower in height than the upper end vertical surface such that the integral top planar

surface has a slope configuration. In one embodiment, the integral top planar surface comprises a face cavity substantially toward the base end configured to accommodate the user's face and head.

[0042] The upper end vertical surface is sized at a height such that when a user lies prone over the integral top planar surface of the device with his or her head situated toward the base end, the user's body is supported substantially at the pelvic area at the edge formed by the integral top planar surface and the upper end vertical surface allowing the buttocks and thighs of the user to substantially hang from the pelvic area accommodated in such way. The upper end vertical surface may comprise a thigh cavity to accommodate the user's thighs and knees.

[0043] In one embodiment, the invention comprises a method of relaxation and stretching the back and spine of a user using the device as previously described in its unfolded position. The user lies prone over the integral top planar surface of the device such that the user's abdomen, up to the groin, is supported and gripped by the edge formed by the upper end and the upper end vertical surface. The user is supported such that his or her knees, ankles and feet do not contact the ground as in the traditional "child's pose" but together with buttocks and thighs, be subject to the force of gravity thus being allowed with further mobility, also by means of the thigh cavity, to empower the lower limb set to increase or decrease the stretch at will. At this disposition, with his or her head situated toward the base end, the user positions his or her face, face down, in a face cavity disposed in the integral top planar surface. The face cavity, which is designed to support the chin and forehead simultaneously, serves to keep the spine aligned while permitting normal breathing by the user during the stretch. The face cavity further grips the user's face preventing, head, neck and body from sliding up or down the integral top planar surface of the device.

[0044] While in this position, the force of gravity increases the stretch of the user's back by providing forces pulling in opposite directions, i.e. downward forces at both the base of the spine and at the head of the user by allowing the weight of the legs and buttocks to provide a downward force at the base of the spine (i.e., the lumbar vertebrate, sacrum and coccyx), and the head and upper body to provide a downward force in the opposing direction at the top of the spine (i.e., the cervical vertebrate). The device thus enhances and increases the stretch of the spine and back muscles and ligaments over the traditional "child's pose" while maintaining alignment of the spine.

[0045] The device can comprise a unitary unit comprising two sections or material blocks, foldable at a hinged edge. Alternatively, the device can comprise one or more separate units. In one embodiment, the device comprises one or more separate units releasably assembled to maintain the configuration of the device.

[0046] The device can be manufactured from a wide range of materials, including wood, plastic, such as polystyrene or acrylic, fiberglass, synthetic or natural foam, rubber or cork. The device may have an inner frame, or it may be solid or hollow inside. The device could be inflatable. The device may comprise a cover made of fabric, leather or plastic, such as vinyl. Ethylene vinyl acetate foam (EVA) has been found to be a good material of construction, and does not require an outer cover. The device can be constructed from a material that can be cleaned.

[0047] The width of the device is sized to be less than the distance between the user's elbows when the user's arms are extended fully at shoulder height and greater than the distance between the user's shoulder blades. The device may be manufactured in various sizes to accommodate various frame sizes for different users.

[0048] Turning to the figures, FIG. **1**B is a left perspective view of the device according to one embodiment of the invention in its unfolded position. Wedge shaped device **100** comprises an integral top planar surface **110** which comprises a base end **120** and an upper end **130**; a base end vertical surface **140**; an upper end vertical surface **150**; and an integral bottom planar surface **160**. User **105** lies face down in a prone position over integral top planar surface **110**, with her head toward base end **120**. Her abdomen, up to the groin, is substantially supported by the edge formed at upper end **130** by integral top planar surface **110** and upper end vertical surface **150**. In this embodiment, base end **120** comprises a substantially planar first lip **125** and upper end **130** comprises a substantially planar second lip **135**. Base end vertical surface **140** has a lower height than upper end vertical surface **150** such that integral top planar surface **110** comprises a slope.

[0049] FIG. **2**A depicts a front perspective view of integral top planar surface **110** of wedge shaped device **100** in its unfolded position, along with base end **120**, base end vertical surface **140**, upper end **130**, upper end vertical surface **150** and integral bottom planar surface **160**. Wedge shaped device **100** further comprises a first block unit **115** and a second block unit **116**. First block unit **115** comprises a first block unit top planar surface **111**, a first block unit bottom planar surface **161**, a first block unit base end vertical surface **140** and a first block unit second vertical surface **117**. Second block unit **116** comprises a second block unit top planar surface **112**, a second block unit bottom planar surface **162**, a second block unit first vertical surface **118** and a second block unit upper end vertical surface **150**. In this embodiment, wedge shaped device **100** comprises a substantially planar first lip **125** disposed at base end **120** and a substantially planar second lip **135** disposed at upper end **130**. Face cavity **145** is disposed on first block unit top planar surface **111**. Face cavity **145** further comprises forehead support **155** and chin support **165**. First block unit second vertical surface **117** and second block unit first vertical surface **118** mate when wedge shaped device **100** is in its open position. First block unit top planar surface **111** and second block unit top planar surface **112** are hingedly attached at hinged edge **170** to form integral top planar surface **110**. First block unit bottom planar surface **161** and second block unit bottom planar surface **162** releasably form integral bottom planar surface **160**.

[0050] FIG. **2**B is a side cut-away view of face cavity **145** according to one embodiment of the invention. Face cavity **145** is disposed in first block unit top planar surface **111** of first block unit **115** between hinged edge **170** and base end **120**. Face cavity **145** comprises forehead support **155** and chin support **165** which support, respectively, the forehead and chin of user **105**.

[0051] FIG. **2**C is a side cut-away view of the device according to one embodiment of the invention in its unfolded position highlighting the structure of a thigh cavity **175** disposed in second block unit upper end vertical surface **150** of second block unit **116**; and face cavity **145**, including forehead support **155** and chin support **165**. Face cavity **145** is disposed in first block unit top planar surface **111** of first block unit **115** between hinged edge **170** and base end **120**.

[0052] FIG. **3** depicts a front perspective view of integral top planar surface **110** of wedge shaped device **100** in its unfolded position, along with base end **120**, planar first lip **125**, upper end **130** and first block unit bottom planar surface **161**. Base end vertical surface **140** is located adjacent to base end **120**. Wedge shaped device **100** further comprises first block unit **115** and second block unit **116**. First block unit top planar surface **111** and second block unit top planar surface **112** are hingedly attached at hinged edge **170** to form integral top planar surface **110**. Face cavity **145** is disposed on first block unit top planar surface **111**. Face cavity **145** comprises forehead support **155** and chin support **165**.

[0053] FIG. **4** depicts a back perspective view of wedge shaped device **100** in its unfolded position, along with upper end **130**, upper end vertical surface **150** and second block unit bottom planar surface **162**. Upper end vertical surface **150** comprises thigh cavity **175**.

[0054] FIGS. **5** and **6** depict right side and left perspective views, respectively, of wedge shaped device **100** in its unfolded position, along with integral top planar surface **110**; base end **120**; planar first lip **125**; upper end **130**; planar second lip **135**; and integral bottom planar surface **160**. Wedge shaped device **100** comprises first block unit **115** and a second block unit **116**. First block unit **115** comprises first block unit top planar surface **111**, first block unit bottom planar surface **161**, first block unit base end vertical surface **140** and first block unit second vertical surface **117**. Second block unit **116** comprises second block unit top planar surface **112**, second block unit bottom planar surface **162**, second block unit first vertical surface **118** and second block unit upper end vertical surface **150**. First block unit second vertical surface **117** and second block unit first vertical surface **118** mate when wedge shaped device **100** is in its unfolded position. First block unit top planar surface **111** and second block unit top planar surface **112** are hingedly attached at hinged edge **170** to form integral top planar surface **110**. First block unit bottom planar surface **161** and second block unit bottom planar surface **162** releasably form integral bottom planar surface **160**.

[0055] FIG. **7** depicts a top perspective view of wedge shaped device **100** in its unfolded position, along with integral top planar surface **110**; base end **120**; planar first lip **125**; upper end **130**; and planar second lip **135**. Face cavity **145** is disposed on integral top planar surface **110** substantially toward base end **120**. Face cavity **145** comprises forehead support **155** and chin support **165**. Wedge shaped device **100** further comprises first block unit **115**, which comprises first block unit top planar surface **111**, and second block unit **116**, which comprises second block unit top planar surface **112**. First block unit top planar surface **111** and second block unit top planar surface **112** are hingedly attached at hinged edge **170** to form integral top planar surface **110**.

[0056] FIG. **8** depicts a bottom perspective view of wedge shaped device **100** in its unfolded position, along with integral bottom planar surface **160**; the bottom edge of base end vertical surface **140**, the bottom edge of upper end vertical surface **150**; and thigh cavity **175**. First block unit **115** comprises first block unit bottom planar surface **161** and the bottom edge of first block unit second vertical surface **117**. Second block unit **116** comprises second block unit bottom planar surface **162** and the bottom edge of second block unit first vertical surface **118**. The bottom edge of first block unit second vertical surface **117** and the bottom edge of second block unit first vertical surface **118** mate when wedge shaped device **100** is in its unfolded position as first block unit bottom planar surface **161** and second block unit bottom planar surface **162** releasably form integral bottom planar surface **160**.

[0057] FIG. **9** depicts a front view of wedge shaped device **100** in its folded position comprising a cube, comprising first block unit bottom planar surface **161**, second block unit bottom planar surface **162**, first block unit second vertical surface **117**, second block unit first vertical surface **118** and hinged edge **170**.

[0058] FIG. **10** depicts the back perspective view of wedge shaped device **100** of FIG. **9** in its folded position, along with first block unit bottom planar surface **161**, second block unit bottom planar surface **162**; thigh cavity **175**; base end vertical surface **140**; and upper end vertical surface **150**.

[0059] FIG. **11**A depicts a left perspective view of wedge shaped device **100** in its folded position, along with base end **120**; planar first lip **125**; upper end **130**; planar second lip **135**; base end vertical surface **140**; upper end vertical surface **150**; first block unit **115**; first block unit top planar surface **111**; second block unit **116**; second block unit top planar surface **112**; first block unit second vertical surface **117**; second block unit first vertical surface **118**; first block unit bottom planar surface **161**; second block unit bottom planar surface **162**; and hinged edge **170**. When wedge shaped device **100** is in its folded position, first block unit top planar surface **111** mates with second block unit top planar surface **112**, and planar first lip **125** mates with planar second lip **135**.

[0060] FIG. **11**B depicts a left perspective view of a wedge shaped device **100** in the process of being opened. Wedge shaped device **100** comprises base end **120**; planar first lip **125**; upper end **130**; planar second lip **135**; base end vertical surface **140**; upper end vertical surface **150**; first block unit **115**; second block unit **116**; first block unit second vertical surface **117**; second block unit first vertical surface **118**; first block unit bottom planar surface **161**; second block unit bottom planar surface **162**; and hinged edge **170**.

[0061] FIG. **12**A depicts a left perspective view of an exemplary embodiment of the device of the invention **1200** in its folded position, along with base end **1220**; planar first lip **1225**; upper end **1230**; planar second lip **1235**; base end vertical surface **1240**; upper end vertical surface **1250**; first block unit **1215**; first block unit top planar surface **1211**; second block unit **1216**; second block unit top planar surface **1212**; first block unit second vertical surface **1217**; second block unit first vertical surface **1218**; first block unit bottom planar surface **1261**; second block unit bottom planar surface **1262**; and hinged edge **1270**. When wedge shaped device **1200** is in its folded position, first block unit top planar surface **1211** of first block unit **1215** mates with second block unit top planar surface **1212** of second block unit **1216**, and first planar lip **1225** mates with second planar lip **1235**.

[0062] FIG. **12**B depicts a left perspective view of other exemplary embodiment of device **1200** in the process of being opened. Device **1200** comprises base end **1220**; planar first lip **1225**; upper end **1230**; planar second lip **1235**; base end vertical surface **1240**; upper end vertical surface **1250**; first block unit **1215**; first block unit top planar surface **1211**; second block unit **1216**; second block unit top planar surface **1212**; first block unit second vertical surface **1217**; second block unit first vertical surface **1218**; first block unit bottom planar surface **1261**; second block unit bottom planar surface **1262**; face cavity **1245**; and hinged edge **1270**.

[0063] FIGS. **13**A to **13**D depict back perspective views of various other exemplary embodiments of upper end vertical surface **150** and thigh cavity **175**.

[0064] FIG. **13**A depicts device **1300**A in its unfolded position, along with other exemplary embodiment of upper end vertical surface **1350**A and thigh cavity **1375**A.

[0065] FIG. **13**B depicts device **1300**B in its unfolded position, along with other exemplary embodiment of upper end vertical surface **1350**B and thigh cavity **1375**B.

[0066] FIG. **13**C depicts device **1300**C in its unfolded position, along with other exemplary embodiment of upper end vertical surface **1350**C and thigh cavity **1375**C.

[0067] FIG. **13**D depicts device **1300**D in its unfolded position, along with other exemplary embodiment of a flat upper end vertical surface **1350**D with no thigh cavity.

[0068] FIGS. **14**A to **14**D depict profile views of various other exemplary embodiments of first block unit **115**.

[0069] FIG. **14**A depicts first block unit **1415**A comprising first block unit top planar surface **1411**A; base end **1420**A; planar first lip **1425**A; base end vertical surface **1440**A; first block unit second vertical surface **1417**A; hinged edge **1470**A; and first block unit bottom planar surface **1461**A.

[0070] FIG. **14**B depicts first block unit **1415**B comprising first block unit top planar surface **1411**B; base end **1420**B; base end vertical surface **1440**B; first block unit second vertical surface **1417**B; hinged edge **1470**B; and first block unit bottom planar surface **1461**B. In this embodiment, base end vertical surface **1440**B is sloped between base end **1420**B and first block unit bottom planar surface **1461**B such that there is no planar first lip.

[0071] FIG. **14**C depicts first block unit **1415**C comprising first block unit top planar surface **1411**C; base end **1420**C; base end vertical surface **1440**C; first block unit second vertical surface **1417**C; hinged edge **1470**C; and first block unit bottom planar surface **1461**C. In this embodiment, base end vertical surface **1440**C is curved between base end **1420**C and first block unit bottom planar surface **1461**C such that there is no planar first lip.

[0072] FIG. **14**D depicts first block unit **1415**D comprising first block unit top planar surface **1411**D; base end **1420**D; hinged edge **1470**D; and first block unit bottom planar surface **1461**D. In this embodiment, base end **1420**D comprises base end vertical surface and planar first lip in a single edge.

[0073] FIG. **15** depicts a left perspective view of another exemplary embodiment of the device of the invention in its unfolded position. Device **1500** comprises integral top surface **1510**; base end **1520**; upper end **1530**; and integral bottom planar surface **1560**. Device **1500** further comprises a first block unit **1515** and a second block unit **1516**. First block unit **1515** comprises a first block unit top planar surface **1511**, a first block unit bottom planar surface **1561** a base end vertical surface **1540** and a first block unit second vertical surface **1517**. Second block unit **1516** comprises a second block unit top planar surface **1512**, a second block unit bottom planar surface **1562** a second block unit first vertical surface **1518** and an upper end vertical surface **1550**. Base end vertical surface **1540** is disposed between base end **1520** and first block unit bottom planar surface **1561**. Face cavity **1545** comprises forehead support **1555** and chin support **1565**. First block unit second vertical surface **1517** and second block unit first vertical surface **1518** mate when device **1500** is in its unfolded position. First block unit top planar surface **1511** and second block unit top planar surface **1512** are hingedly attached at hinged edge **1570** to form integral top planar surface **1510**. First block unit bottom planar surface **1561** and second block unit bottom planar surface **1562** releasably form integral bottom planar surface **1560**.

[0074] The foregoing embodiments have been presented for the purpose of illustration and description only and are not to be construed as limiting the scope of the invention in any way.

What I claim is:

1. A substantially wedge-shaped body support device for stretching the back, conformed by two complementary block units comprising:

i. a first block unit, comprising a first block unit top planar surface, a first block unit bottom planar surface, a first block unit first vertical surface disposed between a base end of the first block unit top planar surface and the first block unit bottom planar surface, and a first block unit second vertical surface situated between the opposing end of the first block unit top planar surface and the first block unit bottom planar surface, wherein the first block unit first vertical surface is of a substantially lower height than the first block unit second vertical surface; and

ii. a second block unit, comprising a second block unit top planar surface, a second block unit bottom planar surface, a second block unit first vertical surface disposed between one end of the second block unit top planar surface and the second block unit bottom planar surface, and a second block unit second vertical surface situated between the opposing upper end of the second block unit top planar surface and the second block unit bottom planar surface, wherein the second block unit first vertical surface is of a substantially lower height than the second block unit second vertical surface,

iii. wherein the first block unit second vertical surface is of substantially the same height as and releasably mates with the second block unit first vertical surface to conform a unitary device comprising the first block unit and the second block unit,

iv. wherein further the first block unit top planar surface and the second block unit top planar surface form a substantially contiguous integral top planar surface of the device,

v. wherein further the first block unit bottom planar surface and the second block unit bottom planar surface form a substantially contiguous integral bottom planar surface of the device,

vi. wherein the first block unit top planar surface comprises a face cavity,

vii. wherein further the second block unit second vertical surface comprises a thigh cavity.

2. The substantially wedge-shaped device of claim **1**, wherein the second block unit second vertical surface is sized to be shorter than the extended length of the leg and shorter than the length of the thigh of a user of the device.

3. The substantially wedge-shaped device of claim **2**, wherein the device comprises a plurality of separate pieces.

4. The substantially wedge-shaped device of claim **3**, wherein the first block unit and the second block unit are linked by means of a hinge system in such a way that when the first block unit and the second block unit are rotated around the hinge such the first block unit top planar surface mates with the complementary second block unit top planar surface to form substantially a cube shape with a flat top surface.

5. The substantially wedge-shaped device of claim **4**, wherein the first block unit and the second block unit are releasably attached.

6. The substantially wedge-shaped device of claim **4**, wherein the face cavity further comprises a forehead support surface and a chin support surface.

7. The substantially wedge-shaped device of claim **6**, wherein the thigh cavity accommodates the user's thighs and knees.

8. The substantially wedge-shaped device of claim **7**, wherein the first block unit vertical surface and the second block unit vertical surface are substantially vertical between the integral top planar surface of the device and the integral bottom planar surface of the device.

9. The substantially wedge-shaped device of claim **8**, wherein the top planar surface of the device is substantially planar and sloped downward from the upper end of the second block unit second vertical surface to the base end of the first block unit first vertical surface.

10. The substantially wedge-shaped device of claim **7**, wherein the device comprises a cover.

11. The substantially wedge-shaped device of claim **10**, wherein the device is inflatable, comprises a wood or metal frame, is solid, or is substantially hollow in the interior of the device.

12. The substantially wedge-shaped device of claim **10**, comprising wood, fabric, plastic, vinyl, fiberglass, synthetic foam or natural foam, rubber or cork.

13. The substantially wedge-shaped device of claim **12**, comprising ethylene vinyl acetate.

14. A method of stretching the back of a user, comprising:

a. situating the body of a user prone and face down along a top planar surface of a wedge shaped device, wherein the device comprises:

i. a first block unit, comprising a first block unit top planar surface, a first block unit bottom planar surface, a first block unit first vertical surface disposed between a base end of the first block unit top planar surface and the first block unit bottom planar surface, and a first block unit second vertical surface situated between the opposing end of the first block unit top planar surface and the first block unit bottom planar surface, wherein the first block unit first vertical surface is of a substantially lower height than the first block unit second vertical surface; and

ii. a second block unit, comprising a second block unit top planar surface, a second block unit bottom planar surface, a second block unit first vertical surface disposed between one end of the second block unit top planar surface and the second block unit bottom planar surface, and a second block unit second vertical surface situated between the opposing upper end of the second block unit top planar surface and the second block unit bottom planar surface, wherein the second block unit first vertical surface is of a substantially lower height than the second block unit second vertical surface,

iii. wherein the first block unit second vertical surface is of substantially the same height as and releasably mates with the second block unit first vertical surface to conform a unitary device comprising the first block unit and the second block unit,

iv. wherein further the first block unit top planar surface and the second block unit top planar surface form a substantially contiguous integral top planar surface of the device,

v. wherein further the first block unit bottom planar surface and the second block unit bottom planar surface form a substantially contiguous integral bottom planar surface of the device,

vi. wherein the first block unit top planar surface comprises a face cavity,

vii. wherein further the second block unit second vertical surface comprises a thigh cavity;

b. situating the trunk of the user such that it is substantially supported at the pelvic area at the edge formed between the second block unit top planar surface and the second block unit second vertical surface;

c. disposing the face of the user in the face cavity, wherein the chin of the user is supported by a chin support disposed in the face cavity and the forehead of the user is supported by a forehead support disposed in the face cavity, and the head of the user is pulled toward the first block unit base end by the force of gravity;

d. allowing the legs, knees and buttocks of the user to hang from the pelvic area, pulled by the force of gravity; and

e. substantially maintaining this position to stretch the back and spine of the user.

15. The method of claim **14**, wherein the second block unit second vertical surface is sized to be shorter than the extended length of the leg and shorter than the length of the thigh of a user of the device.

16. The method of claim **15**, wherein the device comprises a plurality of separate pieces.

17. The method of claim **16**, wherein the first block unit and the second block unit are linked by means of a hinge system in such a way that when the first block unit and the second block unit are rotated around the hinge the first block unit top planar surface mates with the complementary second block unit top planar surface to form substantially a cube shape with a flat top surface.

18. The method of claim **17**, wherein the thigh cavity accommodates the user's thighs and knees.

19. The method of claim **18**, wherein the first and second block units, first and second vertical surfaces are substantially vertical between the integral top planar surface of the device and the integral bottom planar surface of the device.

20. The method of claim **19**, wherein the device comprises ethylene vinyl acetate.

* * * * *