April 1, 1924. 1,488,572

G. B. VROOM

LANDING GEAR FOR AEROPLANES

Filed Dec. 21, 1921 2 Sheets-Sheet 1

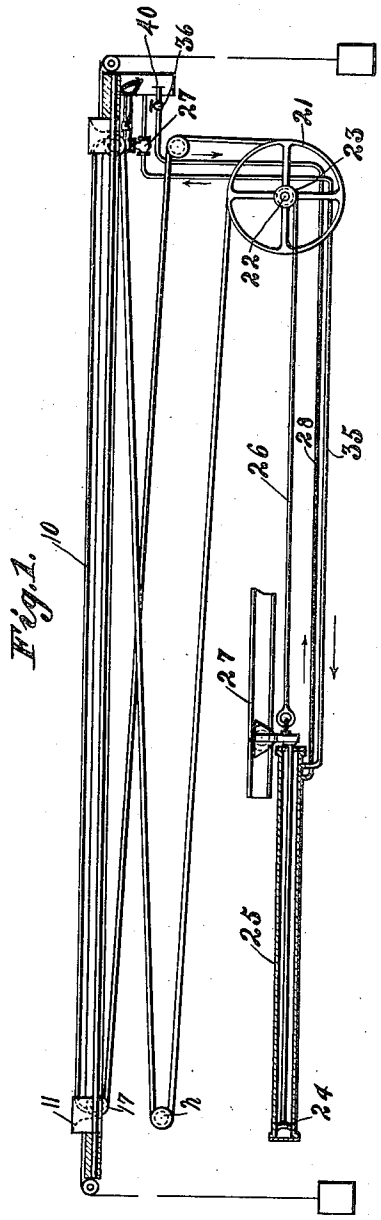

Fig. 1.

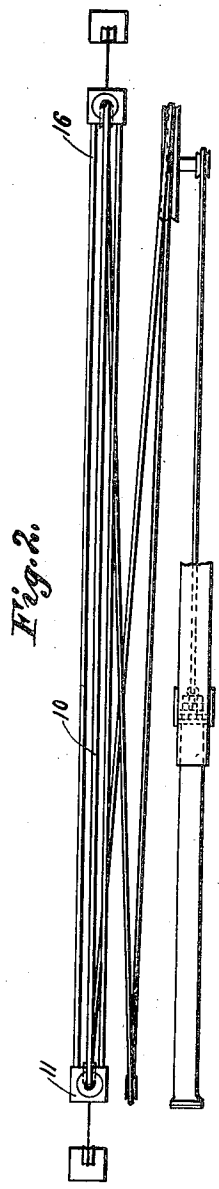

Fig. 2.

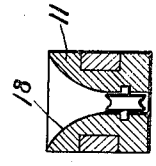

Fig. 3.

Inventor

G. B. Vroom.

By

Attorney

April 1, 1924.

1,488,572

G. B. VROOM

LANDING GEAR FOR AEROPLANES

Filed Dec. 21, 1921

2 Sheets-Sheet 2

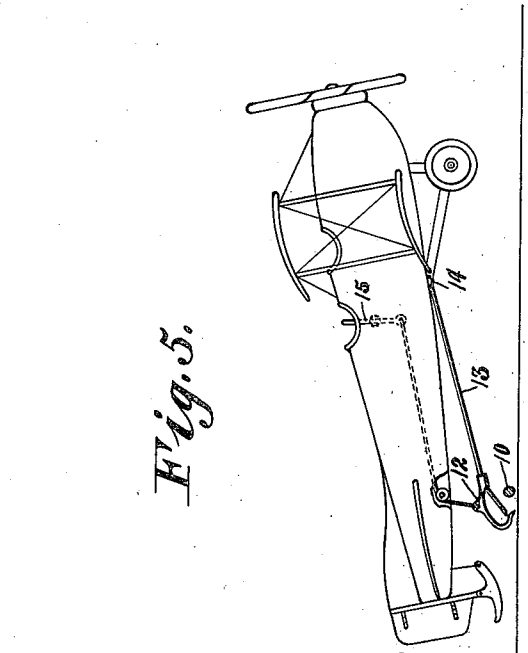

Fig. 5.

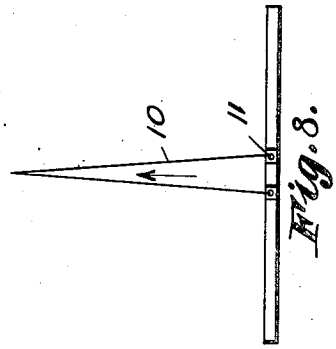

Fig. 8.

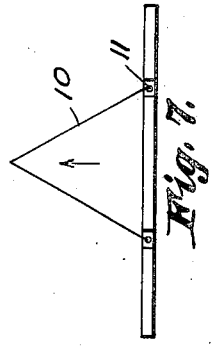

Fig. 7.

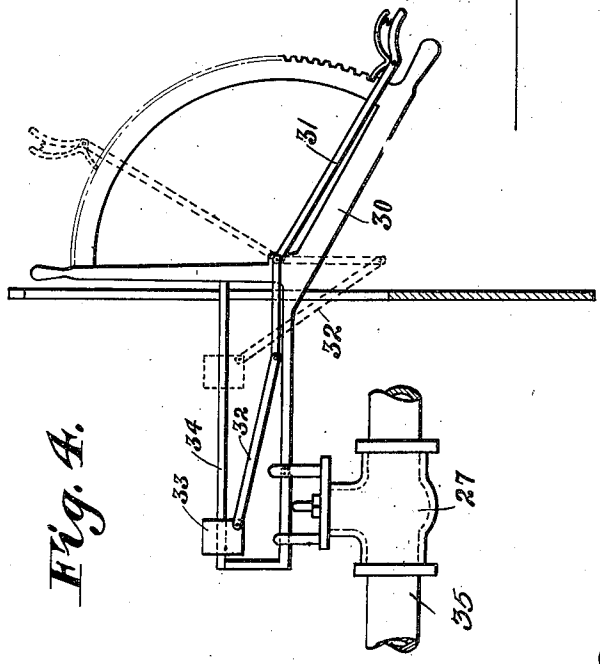

Fig. 4.

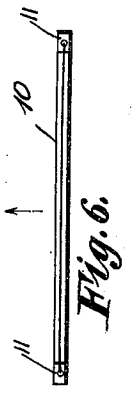

Fig. 6.

Inventor

G.B.Vroom.

By

Attorney

Patented Apr. 1, 1924. 1,488,572

UNITED STATES PATENT OFFICE.

GUYSBERT B. VROOM, OF PHILADELPHIA, PENNSYLVANIA.

LANDING GEAR FOR AEROPLANES.

Application filed December 21, 1921. Serial No. 523,943.

To all whom it may concern:

Be it known that I, GUYSBERT B. VROOM, a citizen of the United States, residing at Philadelphia, Pennsylvania, have invented new and useful Improvements in Landing Gears for Aeroplanes, of which the following is a specification.

This invention relates to apparatus particularly designed to permit the safe landing of aeroplanes (other than sea planes) within a restricted area such as the deck of a ship, the top of a building or a small field.

One of the objects of the present invention is to provide an apparatus of the above general character of extreme simplicity, reliability and wide range of control.

A further object is to provide an apparatus of the above character which may be inexpensively installed upon the deck of a ship or roof of a building and will not materially interfere or obstruct passage across said surface.

In order that a clearer perception of the invention may be had it may be stated that the aeroplane is preferably provided with a hook or other engaging means adapted to coact with a rope stretched across its path of travel, said rope having certain retarding means associated therewith whereupon it will permit a movement of the aeroplane with a gradually retarding action.

Reference is made to the accompanying sheets of drawings showing one of various possible modifications in a semi-diagrammatic manner and in these drawings,

Figure 1 is a cross-sectional view of a deck of a ship, for example, showing such parts of the apparatus as are necessary to fully understand the same.

Figure 2 is a plan view of the apparatus shown in Figure 1 with the deck removed.

Figures 3 and 4 are detail views.

Figure 5 is an elevational view showing the manner in which the retarding means is engaged by the aeroplanes.

Figures 6, 7 and 8 are diagrammatic views showing the operation of the apparatus.

Referring to these drawings in detail, a cable 10 is stretched between two sliding blocks 11 as shown in detail in Figure 3, which cable is adapted to be engaged by a hook 12 secured to the fuselage of the machine as by means of a rod 13 pivoted at 14 and provided with actuating means 15 whereby it may be raised and lowered as desired. The hook is so attached that the pull will come at or near the center of gravity of the plane.

The sliding blocks 11 are free to move in a track or guide 16 and can move only in a straight line across the deck, for example, or transverse to the movement of the plane. The blocks are held rigid except for this freedom of movement described and they may slide in guides or be mounted on rollers as desired. The cable 10 supported by the sliding blocks passes through sheaves 17 which are mounted in the blocks in order that the cable after being engaged by the plane may move freely and with minimum wear and bending stress. The inside of the block is preferably machined and polished so that the bearing surface 18 shall be a surface of revolution and of such curvature that the least radius shall be 1.5 of the minimum radius of the shaft 17 allowed for the cable specified in the given apparatus.

After passing through the blocks the ends of the cable are taken independently by means of two fair lead sheaves to a drum 21 and so secured that each part of the cable will, when strain is put upon the system, tend to turn the drum in the same direction and with equal force.

The drum 21 is preferably of such diameter that both parts of the cable shall be able to pay out to a distance in which it is proposed to stop the plane with an additional allowance for emergency, that is, if it is proposed to stop a plane within a distance of 125 feet each part of the cable must have at least seven turns on a drum of six feet diameter, the drum to be so designed that its moment of inertia shall be approximately 25% of the total retarding pull. This drum should be of light rigid construction and the grooves to be of sufficient depth to insure against riding turns. The drum 21 is provided with a shaft 22 carrying a smaller drum 23, the ratio of the two diameters of the drums being such as to reduce the travel of a pneumatic piston 24 mounted in a cylinder 25 and connected by rod 26 supported by trackway 27. The pneumatic cylinder is that part of the apparatus which supplies the major retarding force. As the piston travels outward toward the drums the air in the cylinder is compressed and increased pressure thereby applied to the pis-

ton. As it is desirable to apply a constant retarding force to the plane a relief valve 27 shown in detail in Figure 4 is connected with the cylinder by pipe line 28. This relief valve forms part of the control system since by suitably loading the relief valve any desired pressure can be maintained in the cylinder within very wide limits up to and including emergency pressures limited only by the strength of materials of cylinder and valve. The required pressure varies according to the weight, initial velocity and desired limit of travel of the plane between initial velocity and rest. The loading of the valve is done by the operator at the control station and preferably comprises a segment 30 having an actuating rod 31 provided with a toggle connection 32 carrying a weight 33 slidably mounted upon the rod 34 connected with the valve, thus by raising the member 31 the weight 33 will be moved outwardly to dotted line position and thereby necessitate an increased pressure in order to open the valve. There is also provided a second pipe line 35 and actuating valve 36 connected with any suitable source of supply of compressed air 40 adapted to aid in restoring the parts to normal position. The operation of the present system is substantially as follows:—

The plane is traveling in the direction of the arrows shown in Figs. 6, 7 and 8, whereupon the hook 12 engages the cable 10 and as the plane continues its travel the cable equalizes itself around the hook and the blocks 11 move together immediately in the wake of the plane thus the retarding force acts in a direction opposite to the direction of travel of the plane. As the plane continues, stress is put upon the whole system. The two parts of the cable between the blocks and the plane are of equal length and thus divide the stress. The full stress, however, is placed upon the drum 21 because each part of the cable goes independently to the drum. There is no shock to the plane because the initial stress is that required to move the blocks only against friction inertia and counter-balance weights and to overcome the inertia of this system particularly increasing pressure in the cylinder to the maximum pressure determined by the relief valve loading.

When the plane has come to rest all pressure in the cylinder is relieved. The plane is disengaged from the cable and the system brought back to readiness for action by the operator on opening the valve 36. The counter-balance weights of the sliding blocks aid in bringing these to initial position.

It will thus be seen that the present invention provides a simple and practical apparatus particularly adapted for use in stopping aeroplanes within a predetermined area. The device may be inexpensively manufactured and installed, is exceedingly reliable, efficient and durable in use and operation.

Without further analysis, the foregoing will so fully reveal the gist of this invention that others can by applying current knowledge readily adapt it for various applications without omitting certain features that, from the standpoint of the prior art, fairly constitute essential characteristics of the generic or specific aspects of this invention, and, therefore, such adaptations should and are intended to be comprehended within the meaning and range of equivalency of the following claims.

What I claim is:—

1. In an apparatus of the character described, in combination, sliding blocks, a track therefor, a cable between said blocks adapted to be engaged by an aeroplane and retarding means associated with said cable.

2. In an apparatus of the character described, in combination, sliding blocks, a track therefor, a cable between said blocks adapted to be engaged by an aeroplane, retarding means associated with said cable, said retarding means including counterweights and a cylinder and piston connected with the cable whereby fluid means within the cylinder is compressed as the cable is tensioned.

3. In a sliding apparatus of the character described, in combination, sliding blocks, a cable between said blocks adapted to be engaged by an aeroplane having a hook, tracks along which said blocks are adapted to slide as the cable is tensioned whereby they automatically come to a position behind the plane, means associated with the cable whereby the stresses therein are equalized and a retarding force applied to the plane in a direction opposite to its travel thereby preventing any component tending to slue the plane to one side or the other.

4. In a sliding apparatus of the character described, in combination, sliding blocks, a cable stretched therebetween adapted to be engaged by an aeroplane having a hook, a cylinder and piston connected with the cable whereby the fluid means within the cylinder is compressed as the cable is tensioned and a relief valve for the fluid means.

5. In a sliding apparatus of the character described, in combination, sliding blocks, a cable between said blocks adapted to be engaged by an aeroplane having a hook, tracks along which said blocks are adapted to slide as the cable is tensioned whereby they automatically come to a position behind the plane, means associated with the cable whereby the stresses therein are equalized by a retarding force applied to the plane in a direction opposite to its travel thereby preventing any component tending to slue the plane to one side or the other, a cylinder

having a relief valve connected with said cable, and means for varying the load on said relief valve whereby the pressure in the cylinder is released as desired.

6. In a sliding apparatus of the character described, in combination, sliding blocks, a cable between said blocks adapted to be engaged by an aeroplane having a hook, tracks along which said blocks are adapted to slide as the cable is tensioned whereby they automatically come to a position behind the plane, means associated with the cable whereby the stresses therein are equalized, a retarding force applied to the plane in a direction opposite to its travel thereby preventing any component tending to slue the plane to one side or the other, a cylinder having a relief valve connected with said cable, means for varying the load on said relief valve whereby the pressure in the cylinder is released as desired and means associated with said cylinder for restoring the cylinder to normal position.

7. In a sliding apparatus of the character described, in combination, sliding blocks, a cable therebetween adapted to be engaged by an aeroplane, a drum to which said cables are attached, a second drum on the same axis of said first drum, a cylinder and piston and means connecting said piston with said second drum whereby the piston is moved as the drum rotates to compress the fluid means within said cylinder.

8. In a sliding apparatus of the character described, in combination, sliding blocks, a cable therebetween adapted to be engaged by an aeroplane, a drum to which said cables are attached, a second drum on the same axis of said first drum, a cylinder and piston, means connecting said piston with said second drum whereby the piston is moved as the drum rotates to compress the fluid means within said cylinder, and means for controlling the maximum pressure in said cylinder.

Signed at Portsmouth, Virginia, this 31 day of October, 1921.

GUYSBERT B. VROOM.