(12) INTERNATIONAL APPLICATION PUBLISHED UNDER THE PATENT COOPERATION TREATY (PCT)

(19) World Intellectual Property Organization
International Bureau

(43) International Publication Date
2 November 2006 (02.11.2006)

PCT

(10) International Publication Number
WO 2006/116760 A2

(51) International Patent Classification:
A61M 29/00 (2006.01)

(21) International Application Number:
PCT/US2006/016553

(22) International Filing Date: 27 April 2006 (27.04.2006)

(25) Filing Language: English

(26) Publication Language: English

(30) Priority Data:
60/675,543 27 April 2005 (27.04.2005) US

(71) Applicant *(for all designated States except US)*: **STOUT MEDICAL GROUP, L.P.** [US/US]; 410 East Walnut, Suite 10, Perkasie, Pennsylvania 18944 (US).

(72) Inventors; and
(75) Inventors/Applicants *(for US only)*: **GREENHALGH, Skott, E.** [US/US]; 7943 Pleasant Avenue, Wyndmoor, Pennsylvania 19038 (US). **ROMANO, John Paul** [US/US]; 59 Skyline Drive, Chalfont, Pennsylvania 18914 (US).

(74) Agent: **LEVINE, David, A.**; LEVINE BAGADE LLP, 2483 East Bayshore Road, Suite 100, Palo Alto, CA 94303 (US).

(81) Designated States *(unless otherwise indicated, for every kind of national protection available)*: AE, AG, AL, AM, AT, AU, AZ, BA, BB, BG, BR, BW, BY, BZ, CA, CH, CN, CO, CR, CU, CZ, DE, DK, DM, DZ, EC, EE, EG, ES, FI, GB, GD, GE, GH, GM, HR, HU, ID, IL, IN, IS, JP, KE, KG, KM, KN, KP, KR, KZ, LC, LK, LR, LS, LT, LU, LV, LY, MA, MD, MG, MK, MN, MW, MX, MZ, NA, NG, NI, NO, NZ, OM, PG, PH, PL, PT, RO, RU, SC, SD, SE, SG, SK, SL, SM, SY, TJ, TM, TN, TR, TT, TZ, UA, UG, US, UZ, VC, VN, YU, ZA, ZM, ZW.

(84) Designated States *(unless otherwise indicated, for every kind of regional protection available)*: ARIPO (BW, GH, GM, KE, LS, MW, MZ, NA, SD, SL, SZ, TZ, UG, ZM, ZW), Eurasian (AM, AZ, BY, KG, KZ, MD, RU, TJ, TM), European (AT, BE, BG, CH, CY, CZ, DE, DK, EE, ES, FI, FR, GB, GR, HU, IE, IS, IT, LT, LU, LV, MC, NL, PL, PT, RO, SE, SI, SK, TR), OAPI (BF, BJ, CF, CG, CI, CM, GA, GN, GQ, GW, ML, MR, NE, SN, TD, TG).

Published:
— *with international search report*
— *before the expiration of the time limit for amending the claims and to be republished in the event of receipt of amendments*

For two-letter codes and other abbreviations, refer to the "Guidance Notes on Codes and Abbreviations" appearing at the beginning of each regular issue of the PCT Gazette.

(54) Title: EXPANDABLE SUPPORT DEVICE AND METHOD OF USE

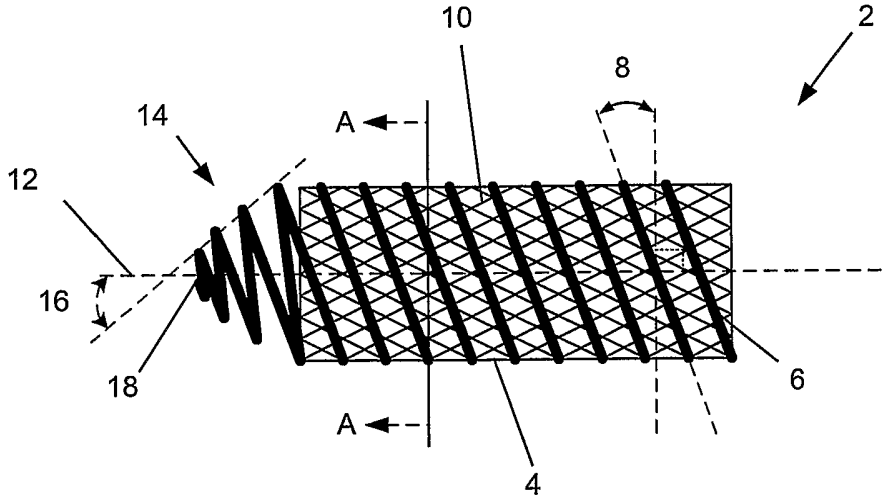

(57) Abstract: An expandable support device and corresponding deployment tool and methods of using the same are disclosed. The threaded expandable support device can be a metal stent used to support damaged biological tissue, such as fractured bone. The deployment tool enables the support device to be screwed into the damaged tissue site, and then expands the support device within the damaged tissue site.

WO 2006/116760 A2

TITLE OF THE INVENTION

EXPANDABLE SUPPORT DEVICE AND METHOD OF USE

E. Skott Greenhalgh

John Paul Romano

FIELD OF THE INVENTION

[0001] This invention relates to devices for providing support for biological tissue, for example to repair spinal compression fractures, and methods of using the same.

BACKGROUND OF THE INVENTION

[0002] Vertebroplasty is an image-guided, minimally invasive, nonsurgical therapy used to strengthen a broken vertebra that has been weakened by disease, such as osteoporosis or cancer. Vertebroplasty is often used to treat compression fractures, such as those caused by osteoporosis, cancer, or stress.

[0003] Vertebroplasty is often performed on patients too elderly or frail to tolerate open spinal surgery, or with bones too weak for surgical spinal repair. Patients with vertebral damage due to a malignant tumor may sometimes benefit from vertebroplasty. The procedure can also be used in younger patients whose osteoporosis is caused by long-term steroid treatment or a metabolic disorder.

[0004] Vertebroplasty can increase the patient's functional abilities, allow a return to the previous level of activity, and prevent further vertebral collapse. Vertebroplasty attempts to also alleviate the pain caused by a compression fracture.

[0005] Vertebroplasty is often accomplished by injecting an orthopedic cement mixture through a needle into the fractured bone. The cement mixture can leak from the bone,

potentially entering a dangerous location such as the spinal canal. The cement mixture, which is naturally viscous, is difficult to inject through small diameter needles, and thus many practitioners choose to "thin out" the cement mixture to improve cement injection, which ultimately exacerbates the leakage problems. The flow of the cement liquid also naturally follows the path of least resistance once it enters the bone – naturally along the cracks formed during the compression fracture. This further exacerbates the leakage.

[0006] The mixture also fills or substantially fills the cavity of the compression fracture and is limited to certain chemical composition, thereby limiting the amount of otherwise beneficial compounds that can be added to the fracture zone to improve healing. Further, a balloon must first be inserted in the compression fracture and the vertebra must be expanded before the cement is injected into the newly formed space.

[0007] A vertebroplasty device and method that eliminates or reduces the risks and complexity of the existing art is desired. A vertebroplasty device and method that is not primarily based on injecting a liquid directly into the compression fracture zone is desired. Further, a secure device that is easily deployed and is stable and fixedly retained by the treatment site is desired.

BRIEF DESCRIPTION OF THE DRAWINGS

[0008] Figure 1 illustrates an embodiment of the expandable support device.

[0009] Figures 2-6 illustrate various embodiments of cross-section A-A of Figure 1.

[0010] Figures 7-15 illustrate various embodiments of the expandable support device.

[0011] Figure 16 illustrates an embodiment of the expandable support device mounted on the deployment tool.

[0012] Figure 17 illustrates an embodiment of cross-section B-B of Figure 16.

[0013] Figure 18 illustrates an embodiment of cross-section of C-C through the expandable support device of Figure 17.

[0014] Figure 19 illustrates an embodiment of cross-section of -C through the deployment tool of Figure 17.

[0015] Figures 20-22 illustrate a method for using the expandable support device and the deployment tool.

DETAILED DESCRIPTION

[0016] Figure 1 illustrates an expandable support device 2 that can have a stent 4. The expandable support device 2 can have one or more threads 6. The expandable support device 2 can have the stent 4 and the thread 6. The thread 6 can make up the entirety of the stent 4. The thread 6 can be separate and attached to, or integral with, the stent 4.

[0017] The thread 6 can be configured as a helix or spiral with a constant or variable radius and a constant or variable thread pitch 8. The thread 6 can be integral with and/or separate from the radially outer surface of the stent 4. The thread 6 can be cut or etched on, from or into the stent 4. The thread 6 can be fixedly and/or removably attached to the stent 4. The thread 6 can have a high friction surface, for example the surface can be textured or roughened, have barbs, or combinations thereof. The thread 6 can be coated, for example with a biocompatible low-friction material, such as with a polytetrafluoroethylene (PTFE) (e.g., Teflon® from E. I. Du Pont de Nemours and Company, Wilmington, DE).

[0018] The stent 4 can have stent components 10. The stent components 10 can be made from braided wires or filaments. The stent components 10 can all be made from a single piece of material. The stent components 10 can have a high friction surface, for example the surface can be textured or roughened, have barbs, or combinations thereof. The

thread 6 can be coated, for example with a biocompatible low-friction material, such as with a polytetrafluoroethylene (PTFE) (e.g., Teflon® from E. I. Du Pont de Nemours and Company, Wilmington, DE). The stent 4 can have an expandable cage. The radial inside of the stent 4, with respect to the longitudinal axis 12, can be threaded (e.g., a groove can be cut in the stent 4). The stent 4 can be configured as a helix. The stents 4 can have a porosity (i.e., from holes between the stent components 10) varying angularly around the perimeter of the stent 4. The longitudinal ends of the stent 4 can be open, closed or a combination thereof.

[0019] The stent 4 and/or expandable support device 2 can be deformable or resilient. The stent 4 and/or expandable support device 2 can be self-expandable or not self-expanding. Parts of the stent 4 and/or expandable support device 2 can be self-expanding, and other parts can be not self-expanding. For example, part of the stent 4 could expand before any force is applied, thereby fixing the stent 4 in place at a deployment site. This fixation can reduce motion, add stability, and increase attachment of the stent 4 in the deployment site (e.g., bone).

[0020] The expandable support device 2 can have a longitudinal axis 12. The thread pitch 8 can be measured from a perpendicular to the longitudinal axis 12. The thread pitch 8 can be from about 1 degree to about 85 degrees, more narrowly from about 3 degrees to about 45 degrees, yet more narrowly from about 5 degrees to about 30 degrees, for example about 15 degrees.

[0021] The thread 6 can extend beyond one or more ends of the stent 4. The thread 6 extending from the stent 4 can be separate from or integral with the thread 6 directly adjacent to (i.e., not extending from) the stent 4. One or more ends of the expandable support device 2 can be configured as a taper 14, for example a straight or rounded cone or approximately hemi-spherical, or bullet-shaped configuration. The taper 14 can be, for

example, as disclosed in the P008 Patent Application. The taper 14 can have a taper angle 16. The taper angle 16 can be from about 2 degrees to about 85 degrees, more narrowly from about 15 degrees to about 70 degrees, yet more narrowly from about 20 degrees to about 60 degrees, for example about 45 degrees.

[0022] The taper 14 can have a tip 18. The tip 18 can be sharpened. The tip 18 can be configured as a needle tip. The tip 18 can be configured as a chisel tip. The tip 18 can be rounded or blunted. The tip 18 can be softened (e.g., covered or coated with a soft material). The tip 18 can be hardened (e.g., covered or coated with a hard material or heat treated, such as annealed). The tip 18 can be made from and/or coated with a biocompatible low-friction material, for example PTFE (e.g., Teflon® from E. I. Du Pont de Nemours and Company, Wilmington, DE). The tip 18 can be made from and/or coated with polymers such as polyethylene (PE), polyethylene terephthalate (PET)/polyester (e.g., DACRON® from E. I. Du Pont de Nemours and Company, Wilmington, DE), polypropylene, PTFE, expanded PTFE (ePTFE), nylon, polyglocolic acid (PGA), poly L-lactide acid (PLLA), a ceramic, or combinations thereof. The tip 18 can be at the end of the thread 6 and/or the end of the stent 4.

[0023] Figure 2 illustrates that the expandable support device 2 can have a substantially circular cross-section. The stent components 10 can have a substantially circular configuration. The stent components 10 can be integral with or separate from the other stent components 10.

[0024] The stent components 10 can have a stent component diameter 20. The stent component diameter 20 can be from about 0.03 mm (0.001 in.) to about 5 mm (0.2 in.), more narrowly from about 0.06 mm (0.002 in.) to about 1.5 mm (0.059 in.), yet more narrowly from about 0.25 mm (0.098 in.) to about 1 mm (0.04 in.), for example about 1 mm (0.04 in.). The stent components 10 for a single stent 4 can be identical in size,

material and strength. The stent components 10 for a single stent 4 can vary in size, material and strength, for example angularly about the longitudinal axis 12. This variation can produce an expanded stent 4 that produces a configuration, for example, with a flat side to prevent rolling.

[0025] The thread 6 can have a circular, oval, rectangular, square, triangular cross-section, or combinations thereof. The thread 6 can be radially outside of and/or in contact with the stent 4. The thread 6 can be a groove in the stent 4, for example in the stent components 10. The thread 6 can be fixed to each stent component 10 that the thread 6 passes. The thread 6 can be fixed to every other, every third, or a lower ratio of stent components 10 of those stent components 10 that the thread 6 passes. The thread 6 can be fixedly or removably attached to the stent components 10.

[0026] The thread 6 can have a thread diameter 22. The thread diameter 22 can be from about 0.03 mm (0.001 in.) to about 5 mm (0.2 in.), more narrowly from about 0.06 mm (0.002 in.) to about 1.5 mm (0.059 in.), yet more narrowly from about 0.25 mm (0.098 in.) to about 1 mm (0.04 in.), for example about 1 mm (0.04 in.).

[0027] Figure 3 illustrates that the thread 6 can be substituted for a stent component 10. The thread diameter 22 can be non-equal to the stent component diameters 20.

[0028] Figure 4 illustrates that the stent 4, for example via the configuration of the stent components 10, can have a substantially square or rectangular configuration. The thread 6 can form a substantially circular configuration on the radial inside of the stent 4, radial outside of the stent 4 (as shown), or passing through the radius of the stent 4. For illustrative purposes, the thread 6 beyond the section A-A is shown in phantom lines 24 in Figures 4 and 5.

[0029] Figure 5 illustrates that the stent 4, for example via the configuration of the stent components 10, can have a substantially oval configuration. The stent 4 can also have a substantially triangular configuration (not shown).

[0030] Figure 6 illustrates that the stent components 10 and/or thread 6 (not shown) can be configured to facilitate uni-direction rotation. For example, the stent 4 as shown is configured to facilitate clockwise rotation and to oppose counter-clockwise rotation, for example when in contact with soft and hard tissue. The cross-sections of the stent components 10 have a spiral configuration. The thread 6 can be configured with a spiral cross-section similar to the stent components 10 shown in Figure 6.

[0031] During use, when the expandable support device 2 is rotated in tissue, the stent components 10 can remove or scoop bone or other tissue from a deployment site and create arches in which the expanded expandable support device 2 can seat (e.g., for increased stability).

[0032] Figure 7 illustrates that the expandable support device 2 can have a taper 14 along substantially the entire longitudinal length of the expandable support device 2. The stent 4 and/or the thread 6 can have a taper 14 along substantially the entire longitudinal length of the stent 4 and/or the thread 6.

[0033] Figure 8 illustrates that the stent 4 and the thread 6 can have substantially the same longitudinal length. Figure 9 illustrates that the expandable support device 2 can have a first taper 26 at a first end and a second taper 28 at a second end. The expandable support device 2 between the ends can have a taper 14 and/or have a substantially constant radius. The thread 6 can be the entire stent 4. The thread 6 can be a coil. Figure 10 illustrates that the expandable support device 2 can have no tapers 14.

[0034] Figure 11 illustrates that the expandable support device 2 can have a weaker section 30, as shown at the taper 14, and a stronger section 32. The weaker section 30

can have a thinner wall and/or smaller stent component 10 and/or thread diameter 22 (as shown) than those of the stronger section 32. The weaker section 30 can be made from different materials and/or using a different method of manufacture (e.g., annealing, heat treating, rolling, combinations thereof) than the stronger section 32. The stronger section 32 can be the entire expandable support device 2 with the exception of the taper 14.

[0035] Figure 12 illustrates that the weaker section 30 can be in the middle of the expandable support device 2. The ends of the expandable support device 2 can be noncontiguous stronger sections 32, for example a first stronger section 34 and a second stronger section 36. The first stronger section 34 can have the taper 14. Figure 13 illustrates that the weaker section 30 can be at the end of the expandable support device 2 away from a taper 14.

[0036] Figures 14 and 15 illustrates that the expandable support device 2 can have a head 38 fixedly or removably attached to one or more ends of the expandable support device 2. The head 38 can be bullet-shaped or substantially hemi-spherical (as shown in Figure 14), substantially conical (as shown in Figure 15), or combinations thereof. The head 38 can have a taper 14. The head 38 can be sharpened, for example at the tip 18. The head 38, for example at the tip 18, can have a high friction surface, for example the surface can be textured or roughened, have barbs, or combinations thereof. The head 38, for example at the tip 18, can be coated, for example with a biocompatible low-friction material, such as with a polytetrafluoroethylene (PTFE) (e.g., Teflon® from E. I. Du Pont de Nemours and Company, Wilmington, DE).

[0037] The head 38 can have one or more taper threads 40. The taper thread 40 can be integral or separate from the head 38. The taper thread 40 can be a groove in the head 38. The taper thread 40 can be formed from the head 38. The taper thread 40 can be a wire or filament on the head 38. The taper thread 40 can have a taper thread diameter 22 (not

shown) from the range of thread diameters 22 disclosed supra. The taper thread diameter can be equal to the thread diameter 22. The taper thread 40 can align with the thread 6 on the rest of the expandable support device 2.

[0038] Any or all elements of any the devices and apparatuses described herein can be made from, for example, a single or multiple stainless steel alloys, nickel titanium alloys (e.g., Nitinol), cobalt-chrome alloys (e.g., ELGILOY® from Elgin Specialty Metals, Elgin, IL; CONICHROME® from Carpenter Metals Corp., Wyomissing, PA), nickel-cobalt alloys (e.g., MP35N® from Magellan Industrial Trading Company, Inc., Westport, CT), molybdenum alloys (e.g., molybdenum TZM alloy, for example as disclosed in International Pub. No. WO 03/082363 A2, published 9 October 2003, which is herein incorporated by reference in its entirety), tungsten-rhenium alloys, for example, as disclosed in International Pub. No. WO 03/082363, polymers such as polyethylene teraphathalate (PET), polyester (e.g., DACRON® from E. I. Du Pont de Nemours and Company, Wilmington, DE), polypropylene, aromatic polyesters, such as liquid crystal polymers (e.g., Vectran, from Kuraray Co., Ltd., Tokyo, Japan), ultra high molecular weight polyethylene (i.e., extended chain, high-modulus or high-performance polyethylene) fiber and/or yarn (e.g., SPECTRA® Fiber and SPECTRA® Guard, from Honeywell International, Inc., Morris Township, NJ, or DYNEEMA® from Royal DSM N.V., Heerlen, the Netherlands), polytetrafluoroethylene (PTFE), expanded PTFE (ePTFE), polyether ketone (PEK), polyether ether ketone (PEEK), poly ether ketone ketone (PEKK) (also poly aryl ether ketone ketone), nylon, polyether-block co-polyamide polymers (e.g., PEBAX® from ATOFINA, Paris, France), aliphatic polyether polyurethanes (e.g., TECOFLEX® from Thermedics Polymer Products, Wilmington, MA), polyvinyl chloride (PVC), polyurethane, thermoplastic, fluorinated ethylene propylene (FEP), absorbable or resorbable polymers such as polyglycolic acid (PGA), poly-L-glycolic acid

(PLGA), polylactic acid (PLA), poly-L-lactic acid (PLLA), polycaprolactone (PCL), polyethyl acrylate (PEA), polydioxanone (PDS), and pseudo-polyamino tyrosine-based acids, extruded collagen, silicone, zinc, echogenic, radioactive, radiopaque materials, a biomaterial (e.g., cadaver tissue, collagen, allograft, autograft, xenograft, bone cement, morselized bone, osteogenic powder, beads of bone) any of the other materials listed herein or combinations thereof. Examples of radiopaque materials are barium sulfate, zinc oxide, titanium, stainless steel, nickel-titanium alloys, tantalum and gold.

[0039] Any or all elements of any of the devices or apparatuses described herein, can be, have, and/or be completely or partially coated with agents and/or a matrix a matrix for cell ingrowth or used with a fabric, for example a covering (not shown) that acts as a matrix for cell ingrowth. The matrix and/or fabric can be, for example, polyester (e.g., DACRON® from E. I. Du Pont de Nemours and Company, Wilmington, DE), polypropylene, PTFE, ePTFE, nylon, extruded collagen, silicone or combinations thereof.

[0040] Any of the devices or apparatuses and/or elements of any of the devices or apparatuses described herein and/or the fabric can be filled, coated, layered and/or otherwise made with and/or from cements, fillers, glues, and/or an agent delivery matrix known to one having ordinary skill in the art and/or a therapeutic and/or diagnostic agent. Any of these cements and/or fillers and/or glues can be osteogenic and osteoinductive growth factors.

[0041] Examples of such cements and/or fillers includes bone chips, demineralized bone matrix (DBM), calcium sulfate, coralline hydroxyapatite, biocoral, tricalcium phosphate, calcium phosphate, polymethyl methacrylate (PMMA), biodegradable ceramics, bioactive glasses, hyaluronic acid, lactoferrin, bone morphogenic proteins (BMPs) such as recombinant human bone morphogenetic proteins (rhBMPs), other materials described herein, or combinations thereof.

[0042] The agents within these matrices can include any agent disclosed herein or combinations thereof, including radioactive materials; radiopaque materials; cytogenic agents; cytotoxic agents; cytostatic agents; thrombogenic agents, for example polyurethane, cellulose acetate polymer mixed with bismuth trioxide, and ethylene vinyl alcohol; lubricious, hydrophilic materials; phosphor cholene; anti-inflammatory agents, for example non-steroidal anti-inflammatories (NSAIDs) such as cyclooxygenase-1 (COX-1) inhibitors (e.g., acetylsalicylic acid, for example ASPIRIN® from Bayer AG, Leverkusen, Germany; ibuprofen, for example ADVIL® from Wyeth, Collegeville, PA; indomethacin; mefenamic acid), COX-2 inhibitors (e.g., VIOXX® from Merck & Co., Inc., Whitehouse Station, NJ; CELEBREX® from Pharmacia Corp., Peapack, NJ; COX-1 inhibitors); immunosuppressive agents, for example Sirolimus (RAPAMUNE®, from Wyeth, Collegeville, PA), or matrix metalloproteinase (MMP) inhibitors (e.g., tetracycline and tetracycline derivatives) that act early within the pathways of an inflammatory response. Examples of other agents are provided in Walton et al, Inhibition of Prostoglandin E_2 Synthesis in Abdominal Aortic Aneurysms, *Circulation*, July 6, 1999, 48-54; Tambiah et al, Provocation of Experimental Aortic Inflammation Mediators and Chlamydia Pneumoniae, *Brit. J. Surgery* 88 (7), 935-940; Franklin et al, Uptake of Tetracycline by Aortic Aneurysm Wall and Its Effect on Inflammation and Proteolysis, *Brit. J. Surgery* 86 (6), 771-775; Xu et al, Sp1 Increases Expression of Cyclooxygenase-2 in Hypoxic Vascular Endothelium, *J. Biological Chemistry* 275 (32) 24583-24589; and Pyo et al, Targeted Gene Disruption of Matrix Metalloproteinase-9 (Gelatinase B) Suppresses Development of Experimental Abdominal Aortic Aneurysms, *J. Clinical Investigation* 105 (11), 1641-1649 which are all incorporated by reference in their entireties.

METHODS OF MAKING

[0043] The stent 4 can be made from braided wires. The stent 4 can be molded, machined, lathed, milled, laser cut, filed, polished, acid etched, or otherwise formed from or into a single piece of material. The thread 6 can be cut into the stent 4, for example, using a lathe. The stent 4 can be coated with sintered fabrics, sintered beads, foamed metals, or combinations thereof.

METHODS OF USING

[0044] Figure 16 illustrates a deployment expandable support system 42 can have the expandable support device 2 that can be removably attached to a deployment tool 44. The deployment tool 44 can have a tool aligner 46. The tool aligner 46 can be inserted into the expandable support device 2. The deployment tool 44 can have a handle (not shown) proximal, as shown by arrow, to the remainder of the deployment tool 44.

[0045] Figures 17 and 18 illustrate that the expandable support device 2 can have a device aligner 48. The tool aligner 46 can removably attach to the device aligner 48 (as also illustrated by Figure 19), for example to center the deployment tool 44 and the expandable support device 2 with respect to the longitudinal axis 12. The tool aligner 46 can transmit translational force to the device aligner 48. The expandable support device 2 and the deployment tool 44 can have magnets, for example in the tool aligner 46 and the device aligner 48. The magnets can, for example, attract and align the expandable support device 2 and the deployment tool 44.

[0046] The expandable support device 2 can be hollow. The deployment tool 44 can have a conduit 50. The conduit 50 can be integral with and formed in the deployment tool 44. The conduit 50 can be a separate tube in the deployment tool 44. The conduit 50 can be in fluid communication with a controllable fluid pressure source (not shown). The

conduit 50 can be attached to, and/or in fluid communication with, an expansion device such as a balloon 52 or pneumatic jack (not shown). The balloon 52 can be in the hollow of the expandable support device 2. The balloon 52 and/or conduit 50 can pass through a balloon port 54 in the expandable support device 2. The balloon 52 can be a balloon 52 as disclosed in the PCT Application Number US2005/033,965, filed 21 September 2005; U.S. Provisional Patent Application Numbers 60/611,972, filed 21 September 2004; and 60/740,792 filed 30 November 2005, all of which are herein incorporated by reference in their entireties, or combinations thereof. The balloon 52 can be a balloon 52 used for vascular stent deployment or angioplasty as known to one having ordinary skill in the art.

[0047] The balloon 52 can be removably attached or unattached to the expandable support device 2. The balloon 52 can be pinch-fitted at the tip 18 and/or in a corner of the expandable support device 2. The expandable support device 2 can have a hole at the tip 18. A balloon first end 56 can be pulled through the tip 18, for example, enough to removably attach the balloon 52 to the tip 18. An epoxy can be applied to the balloon 52 and expandable support device 2.

[0048] The taper 14 can be formed, for example, by crimping the expandable support device 2 onto the deployment tool 44 (e.g., onto the balloon first end 56).

[0049] The deployment tool 44 can have one or more male driver heads 58. The driver heads 58 can be integral with or separate from the deployment tool 44. The expandable support device 2 can have one or more female receptacles, such as sockets or notches 60. The notches 60 can be configured to interference fit the driver head 58. The driver head 58 can be configured to transmit a rotational force to the notch 60. The male driver head 58 and the female notch 60 can be, respectively, on the deployment tool 44 and the expandable support device 2, and/or, respectively, on the expandable support device 2 and the deployment tool 44.

[0050] Figure 20 illustrates that the deployment expandable support system 42 can be used to repair damaged tissue, such as a bone 62 with a fracture 64, for example a vertebra, or any other bone 62 (e.g., a long bone) collapsed or otherwise suffering from a fracture 64, such as a compression fracture. The expandable support device 2, for example as part of the deployment expandable support system 42, can be positioned adjacent to the damaged tissue, such as the fracture 64. The expandable support device 2 can be attached to any expanding deployment tool 44 (e.g., balloon 52 or otherwise mechanical). The expandable support device 2, attached or not attached to the deployment tool 44, can be placed on a guide wire.

[0051] A small pilot hole (not shown) in the bone 62 can be created by a pilot tool to guide the expandable support device 2. The expandable support device 2 can self tap into the deployment site (e.g., bone 62). The treads on the taper 14 can be used as tapping or cutting threads. The tapping threads on the expandable support device 2 can self-tap or install through a small pilot hole.

[0052] The thread 6 can be oriented in the direction necessary to deploy the expandable support device 2 into a bone 62 with minimum thread resistance. The expandable support device 2, for example as part of the deployment expandable support system 42, can be rotated, as shown by arrows 66, and translated 68, as shown by arrow. The deployment tool 44 can forcefully impact the deployment site, for example, to seat the expandable support device 2 before the deployment tool 44 is rotated 66. Rotation 66 of the deployment tool 44 can cause the thread 6 to screw into a deployment site, such as the fracture 64. The threads 6 can be fixed in the deployment site, for example, after screwing the expandable support device 2 during use.

[0053] Figure 21 illustrates the deployment expandable support system 42 that can have the expandable support device 2 positioned in the deployment site. The controllable fluid

pressure source (not shown) can be activated. Pressurized fluid, such as carbon dioxide or saline solution, can be forced into the deployment tool 44, as shown by arrow. The pressurized fluid can flow through the conduit 50 and into the balloon 52. The pressurizing balloon 70 can transmit loads directly to the expandable support device 2, for example, forcing the expandable support device 2 to expand radially, as shown by arrows 72. The bone 62 can be reconfigured by the expansion of the expandable support device 2.

[0054] Figure 22 illustrates that the bone 62 can be reconfigured. The expandable support device 2 can be in an expanded configuration. The expandable support device 2 can have a maximum outer diameter equal or smaller the maximum outer diameter of the stent 4. The pressurized fluid in the balloon 52 can be released. The balloon 52 can be unattached from the expandable support device 2. The deployment tool 44 can be translated away from the bone 62, as shown by arrow 74.

[0055] The expandable support device 2 can be porous and/or hollow. If deployed into bone 62, the bone 62 carved out during the expandable support device 2 deployment (e.g., during rotation) can fill the porous and/or hollow space within the expandable support device 2.

[0056] Multiple expandable support devices 2 can be deployed adjacent to one another, and/or inside a previously deployed expandable support devices 2. The radial inside, with respect to the longitudinal axis 12, of the expandable deployment device can be threaded, for example, to attach to the balloon 52 and during delivery, and/or to help hold fillers (e.g., bone 62) in the hollow in place.

[0057] The stent 4 can be any expandable support device 2 or combinations thereof as described in PCT Application Numbers US2005/034,115, filed 21 September 2005; US2005/034,742, filed 26 September 2005; US2005/034,728 filed 26 September 2005,

US2005/037,126, filed 12 October 2005; and U.S. Provisional Patent Application Numbers 60/612,001, filed 21 September 2004; 60/675,543, filed 27 April 2005; 60/612,723, filed 24 September 2004; 60/612,728, filed 24 September 2004; 60/617,810, filed 12 October 2004; 60/723,309, filed 4 October 2005; 60/741,201, filed 1 December 2005; 60/754,239, filed 27 December 2005; 60/741,197, filed 1 December 2005; 60/751,882, filed 19 December 2005; 60/675,512, filed 27 April 2005; 60/752,180, filed 19 December 2005; 60/699,577, filed 14 July 2005; 60/699,576 filed 14 July 2005; 60/754,492, filed 28 December 2005; 60/751,390 filed 15 December 2005; 60/752,186 19 filed December 2005; 60/754,377 filed 27 December 2005; 60/754,485, filed 28 December 2005; 60/754,227 filed 28 December 2005; 60/752,185 filed 19 December 2005; 60/735,718, filed 11 November 2005; 60/752,183, filed 19 December 2005; and 60/752,182, filed 19 December 2005; all of which are herein incorporated by reference in their entireties.

[0058] It is apparent to one skilled in the art that various changes and modifications can be made to this disclosure, and equivalents employed, without departing from the spirit and scope of the invention. Elements shown with any embodiment are exemplary for the specific embodiment and can be used on or in combination with other embodiments within this disclosure. The devices, apparatuses, systems and methods disclosed herein can be used for medical or non-medical, industrial applications.

CLAIMS

We Claim:

1. A tool device for deploying an expandable, biologically implantable device, the tool device comprising:

a driver head, configured to transfer rotational force to the biologically implantable device, and

an expansion device.

2. The tool device of Claim 1, wherein the expansion device comprises a balloon.

3. The tool device of Claim 2, further comprising a fluid conduit, and wherein the fluid conduit is in fluid communication with the expansion device.

4. The tool device of Claim 1, further comprising an aligner, wherein the aligner is configured to align the tool and the biologically implantable device.

5. An expandable support device for repairing damaged bone or cartilaginous tissue, comprising:

a stent having a longitudinal axis,

a thread, wherein the thread is radially outside the stent with respect to the longitudinal axis.

6. The device of Claim 5, wherein the thread comprises a groove in the stent.

7. The device of Claim 5, wherein the thread comprises a filament

8. An expandable support device for repairing damaged bone or cartilaginous tissue, comprising:

a stent having a longitudinal axis,

a thread, wherein the thread is radially substantially equal to the stent with respect to the longitudinal axis.

9. A deployable expandable support system for repairing damaged bone or cartilaginous tissue, comprising:

an expandable support device for repairing damaged bone or cartilaginous tissue, and

a tool for deploying an expandable, biologically implantable device,

wherein the tool is configured to transmit rotational force to the expandable support device.

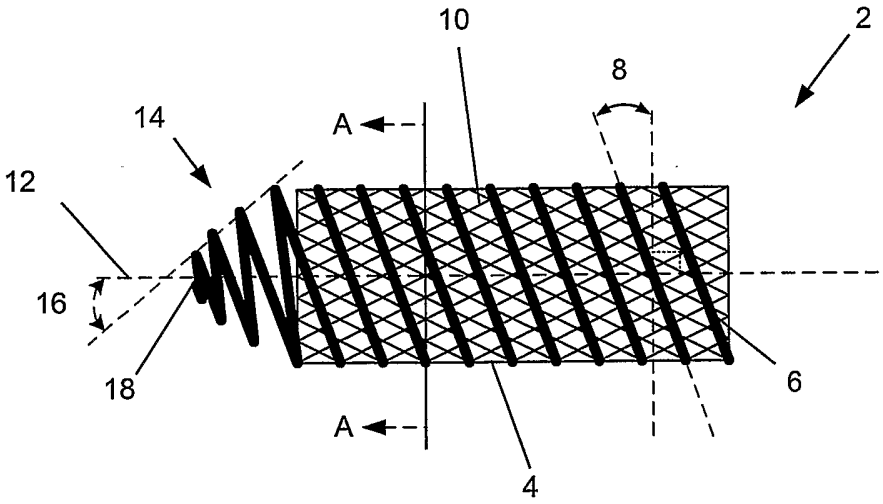

Fig. 1

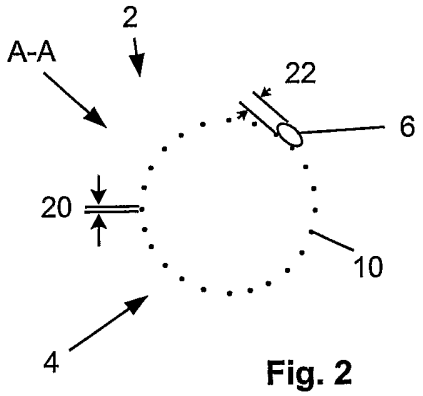

Fig. 2

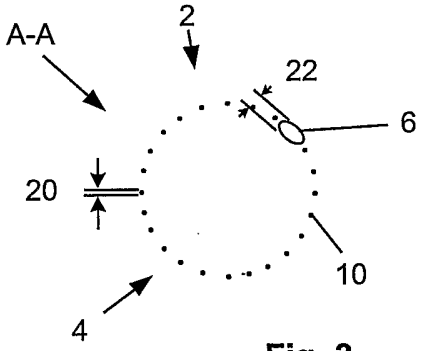

Fig. 3

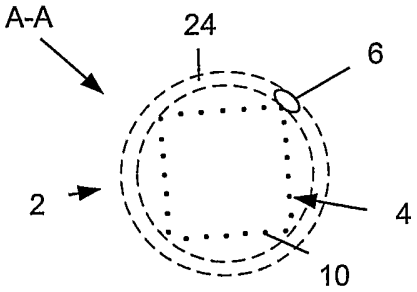

Fig. 4

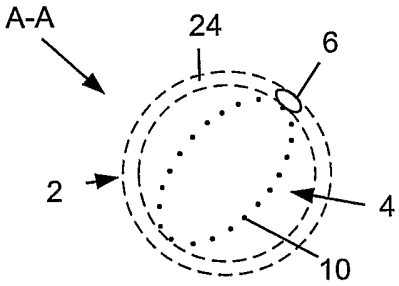

Fig. 5

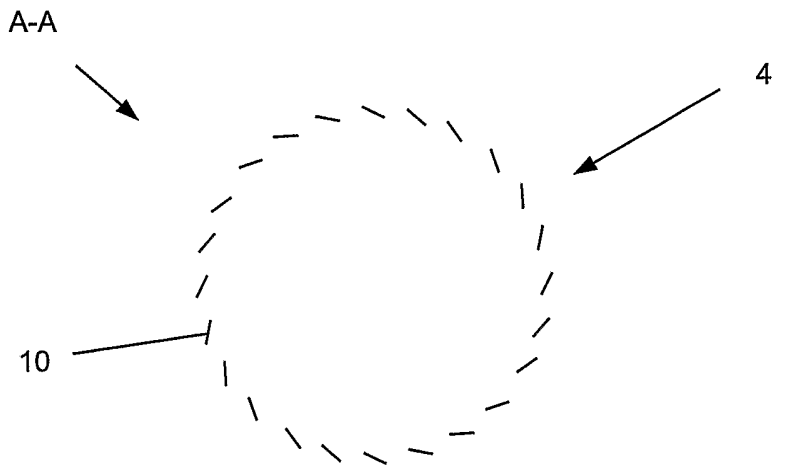

Fig. 6

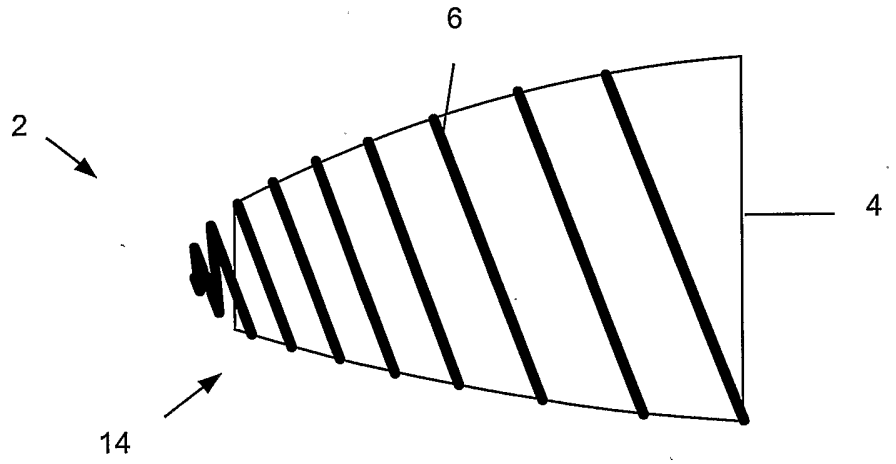

Fig. 7

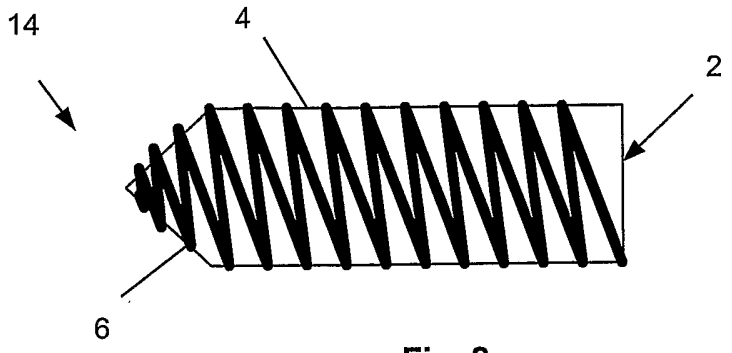

Fig. 8

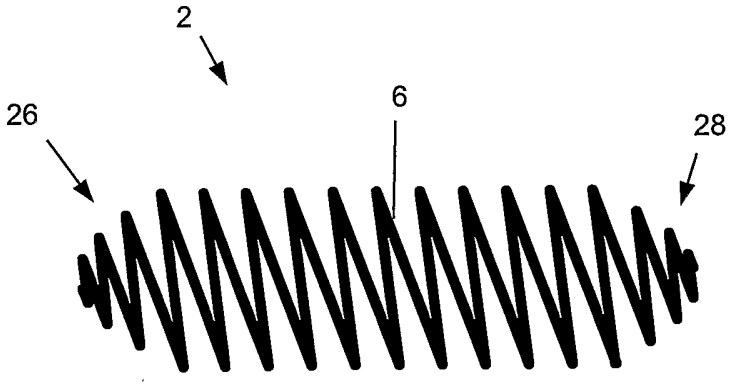

Fig. 9

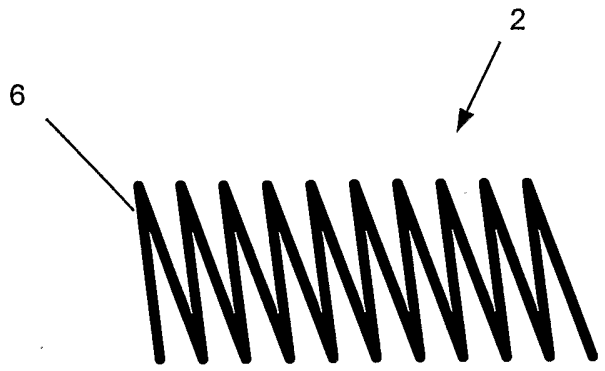

Fig. 10

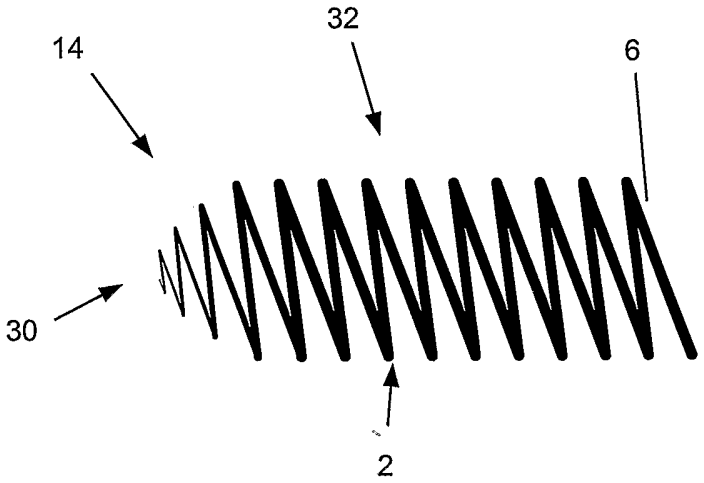

Fig. 11

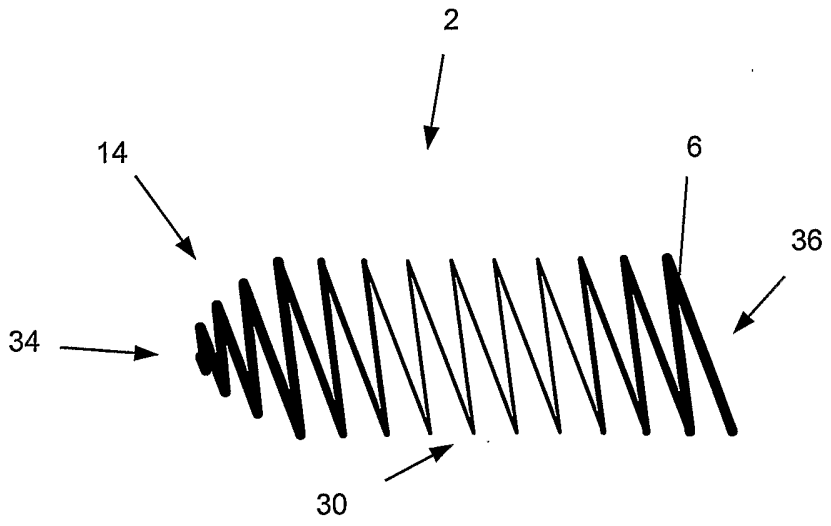

Fig. 12

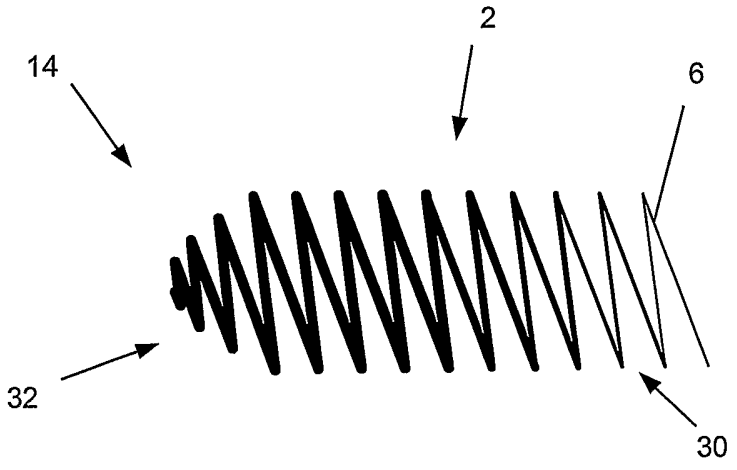

Fig. 13

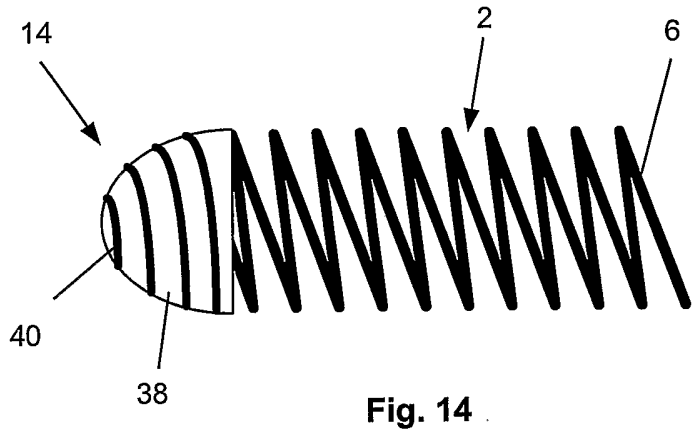

Fig. 14

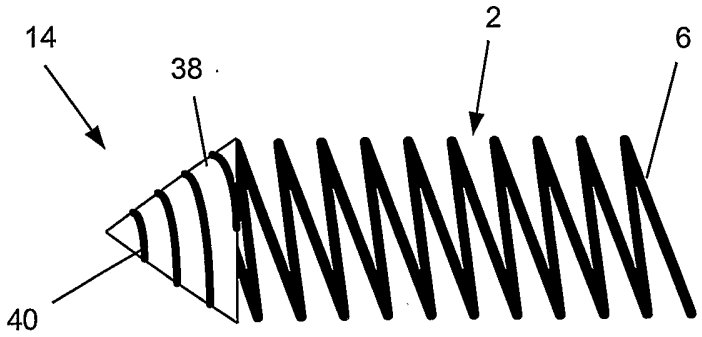

Fig. 15

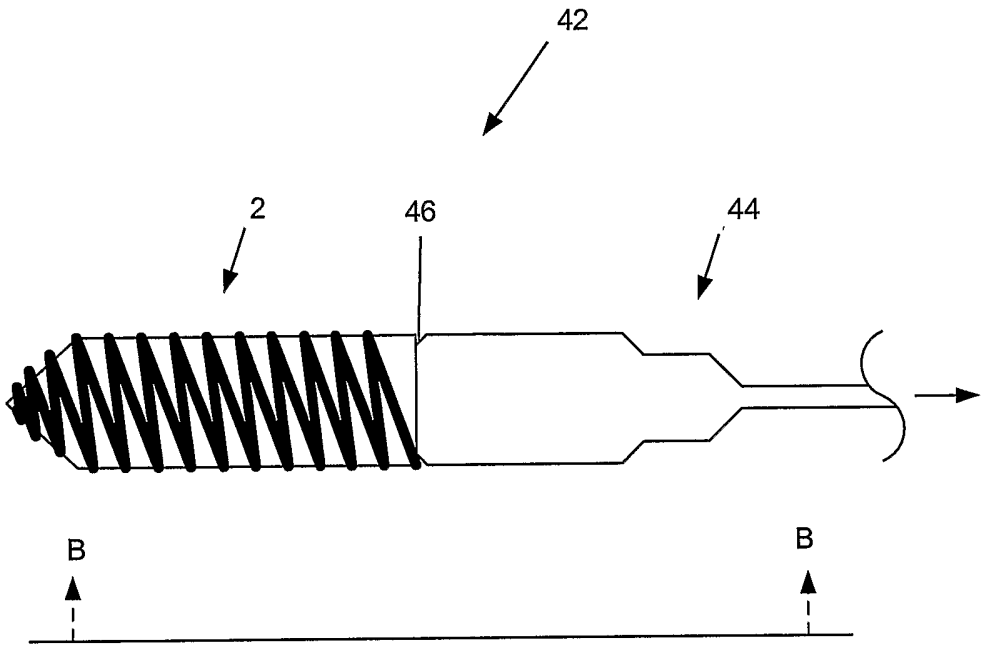

Fig. 16

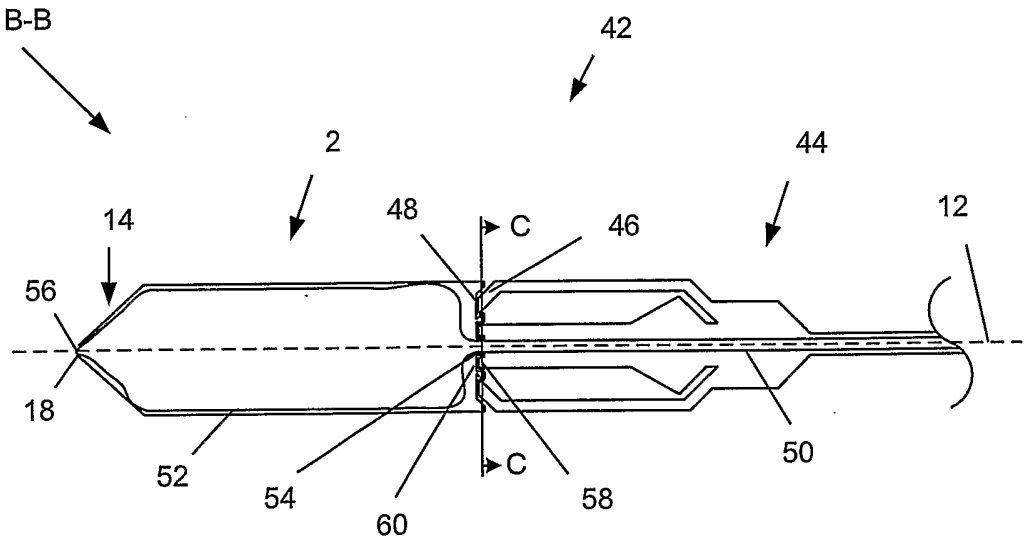

Fig. 17

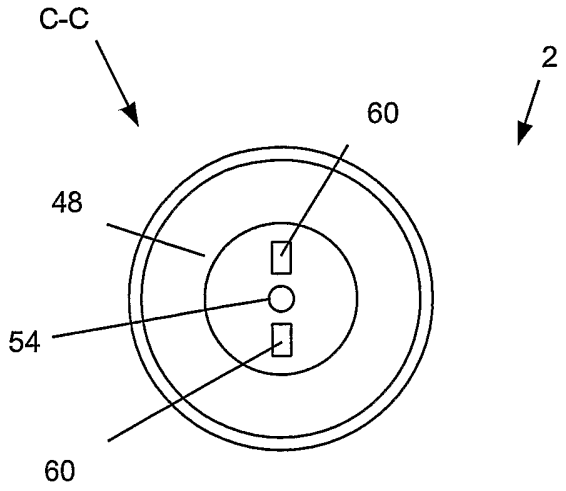

Fig. 18

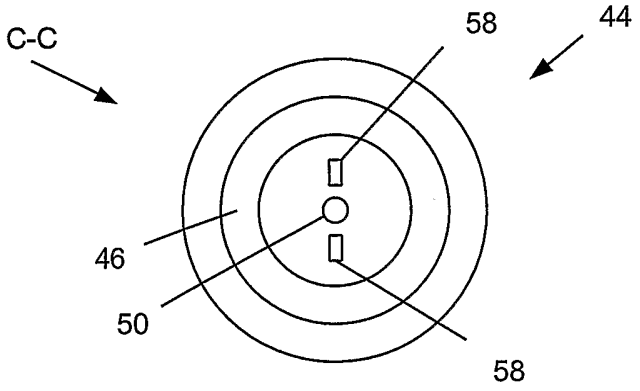

Fig. 19

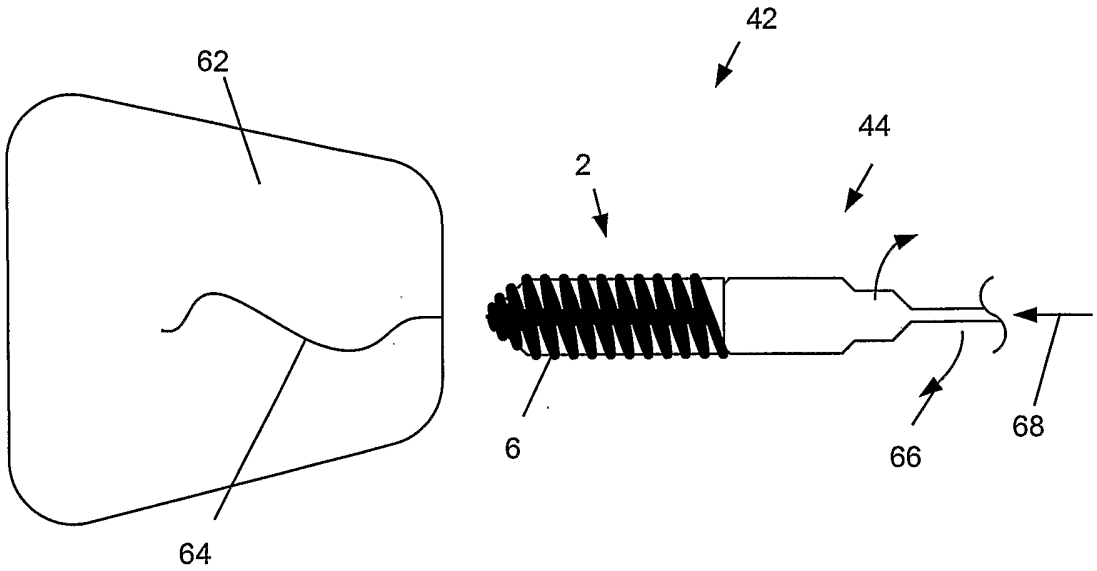

Fig. 20

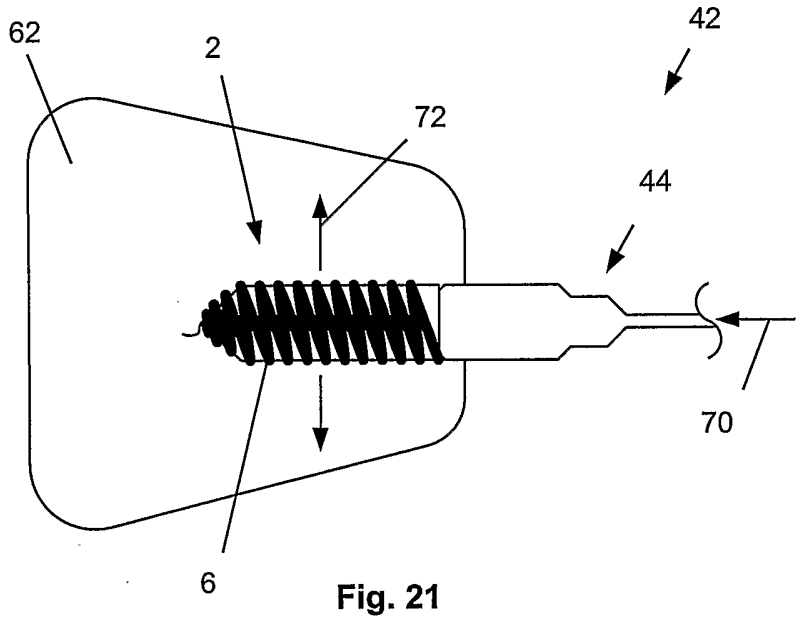

Fig. 21

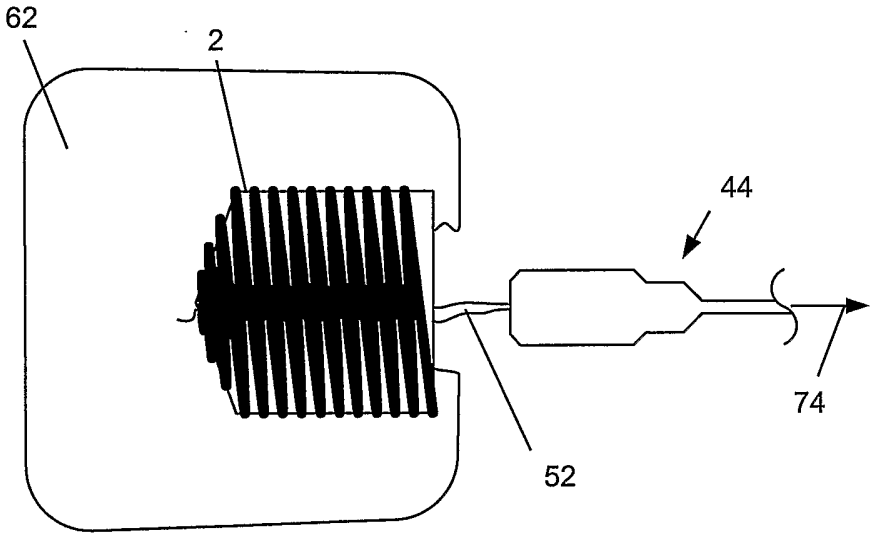

Fig. 22