Nov. 26, 1940. A. R. LOCKE 2,222,871

LIGHTING CONTROL SYSTEM

Filed July 5, 1932 2 Sheets-Sheet 1

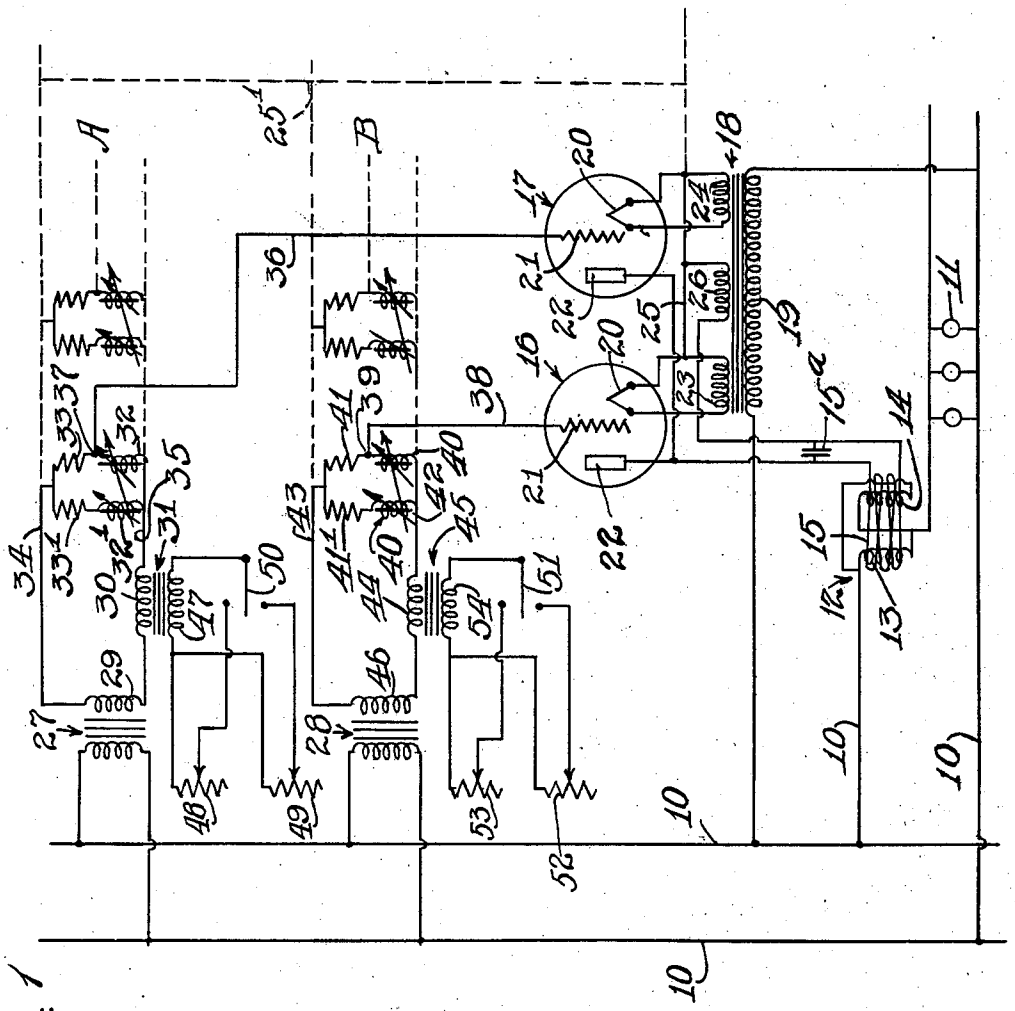

Fig. 1

Inventor
Albert R. Locke
By Charles R. Wills Atty.

Nov. 26, 1940. A. R. LOCKE 2,222,871

LIGHTING CONTROL SYSTEM

Filed July 5, 1932 2 Sheets-Sheet 2

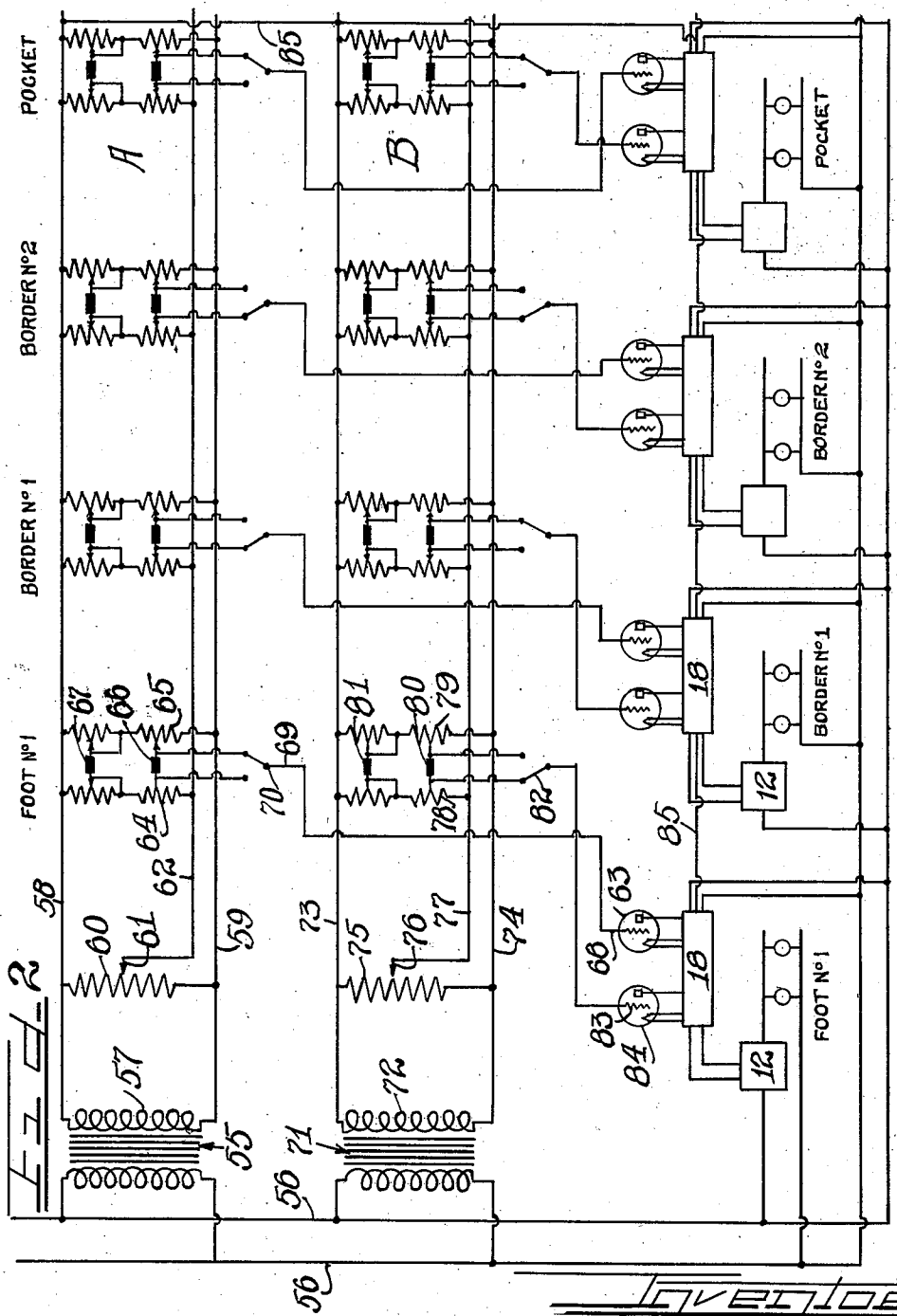

FIG. 2

Inventor
Albert R. Locke.

By Charles O. Fields Atty

Patented Nov. 26, 1940 2,222,871

UNITED STATES PATENT OFFICE

2,222,871

LIGHTING CONTROL SYSTEM

Albert R. Locke, Oak Park, Ill., assignor of one-half to Monad Corporation, a corporation of Illinois

Application July 5, 1932, Serial No. 620,843

41 Claims. (Cl. 175—312)

This invention relates to improvements in control systems for regulating, as desired, various characteristics in electrical circuits, the invention being especially applicable for the control of visual scenic effects for theater illumination, although the invention is highly desirable for similar power distribution installations, and will have many and various uses and purposes as will be apparent to one skilled in the art.

The invention herein described relates to improved means for carrying out the invention disclosed in my application entitled "Selective circuit system and remote control," filed June 25, 1928, Serial No. 288,214, for the reissue of Letters Patent No. 1,638,774 and also relates to a system and method of operation including features of connection, advantages, and principles not set forth in my aforesaid patent.

One distinguishment of the invention herein described over that set forth in my above identified patent, is that this invention not only teaches the system for and method of preselection of loads, which is taught in that patent, but also teaches the system for and method of preselecting and overlapping of intensity control to produce blending and new lighting effects.

An object of this invention is to provide a system in which a plurality of combinations of lights, or groups of lights for a scenic effect, may be preselected in independent circuits for subsequent collective energization, the invention contemplating not only the preselection of the various circuits but also the preselection of the intensity of the lights in each circuit.

Another object of this invention is to provide a system by which a plurality of combinations of lights may be preselected for subsequent collective energization, together with a preselection of the intensity at which each circuit is to be subsequently energized, the intensities not necessarily being the same for all the circuits, and whereby any preselected combination of circuits may be completely controlled as to energization and intensity by means of a unitary master control.

Still another object of this invention is the provision of a system by which a plurality of preselected groups of lighting circuits may each be controlled both as to energization and intensity of energization by a master control connected in common with its respective group, the system being such that several master controls may be in circuit simultaneously with the same single lighting circuit or same group of lighting circuits.

It is also an object of this invention to provide a system by which a plurality of preselected combinations of lighting circuits may be controlled each by a master control connected in common with its respective combination of lighting circuits, and in which the control of any single lighting circuit or plurality of lighting circuits may be transferred from one master control to another without any undesired variance in the brilliancy or intensity of the lighting circuit.

It is another object of this invention to provide a system in which a plurality of load circuits may be preselected for energization and intensity control thereof by a master control, and a different combination of load circuits may be likewise preselected for control by a different master control, and so on for as many master controls as may be desired, and the master controls may be utilized for energizing and controlling their respective group of lighting circuits in any desired order, or two or more controls may be in live circuits simultaneously, some of the load circuits being common to both master controls, without any change in the visual characteristics of the load circuits that is not indicated in advance by the layout of the means for accomplishing the preselection.

Still another object of this invention is the provision of a system in which a plurality of differently colored lighting circuits as a group may be preselected by controls individual to each circuit for energization each at a preselected intensity to produce a predetermined shade or blending, and said group of circuits may be collectively controlled by a master control.

A still further object of this invention is the provision of a system in which a plurality of different controls may each be utilized to control the intensity of the lighting circuit, the system being such that the intensity effected by one of said controls may be overlapped with that of another or many other controls, and the resultant intensity of the circuit is governed solely by that control which is at the higher intensity. In other words, the effects of the various controls in live circuit with the lighting unit at the same time are not cumulative, but the circuits may be controlled by that control which is set for the higher intensity as if that control was the only one in live circuit for the lighting unit.

It is also an object of this invention to provide a system in which a plurality of lighting units may be preselected for energization at a certain

intensity for each unit, the intensities not necessarily being the same, by a control individual to each unit, and the entire combination of preselected lighting units may be controlled as to energization and intensity by means of a master control in common connection with all of the individual controls, the intensities of the lighting units varying proportionately as a result of the control by the master either up or down, whereby the same shade produced by variously colored lighting units may be maintained even though the units have been preset for different intensities by the individual controls.

Also an object of this invention is the provision of a system in which a plurality of lighting units may be preselected for intensity control by means of a control individual to each lighting unit, which individual controls may be utilized in their individual capacity or selectively connected to a master control.

Another object of this invention is the provision of a system in which a plurality of lighting units may be preselected each as to energization and intensity by a control individual to the respective units, and all of the preselected units may be selectively varied from a maximum to a minimum intensity by means of a master control exercising a common control over all of the preselected units, one of the said limits of intensity for each unit being predetermined by the setting of the control individual to that unit.

It is also an important object of this invention to provide a new and novel method for illuminating with electric lighting circuits.

While some of the more salient features, characteristics, advantages and methods of the present invention have been above pointed out, others will become apparent from the following disclosures.

The invention includes these and other features of arrangement and operation, hereinafter described, and shown in a preferred form on the drawings, as more particularly indicated by the claims.

On the drawings:

Figure 1 is a schematic diagram of an electric system, including principles of the present invention.

Figure 2 is a schematic diagram of an electric system embodying a plurality of set-ups similar to that shown in Figure 1, it being distinctly understood that Figure 2 is not limited to the number of lighting circuits and the particular number of individual controls and master controls shown in the figure, but that the numbers of these respective parts may be multiplied as desired, this figure being shown in the simplified form for purpose of clarity.

As shown on the drawings:

Alternating current supply lines 10 are connected to a load circuit of lamps 11 through a reactor indicated generally by the numerals 12.

The reactor 12 comprises a pair of load coils 13 and 14 connected in parallel and in magnetic opposition on an iron core, and a control winding 15 which straddles the load coils. One type of reactor desirable for this system is described in my copending application for patent entitled "Control system," Serial No. 611,337, filed May 14, 1932.

The control winding 15 is connected in the plate circuit of a pair of thermionic tubes 16 and 17 which control the flow of current through the coil and affect the reactance of the reactor to control the dimming of the lamps in the load circuits for lighting effects in theaters and the like.

The tubes 16 and 17 are energized through a transformer 18 which has its primary winding 19 connected to the supply line 10. Each tube has a cathode 20, a control grid 21, and a plate or anode 22.

The cathode of tube 16 is energized by a secondary winding 23 of the transformer and the cathode of tube 17 is energized by another secondary winding 24, and a wire 25 connects the ends of the two secondaries having like polarity.

The plates 22 of both tubes are connected in parallel and are fed by a secondary winding 26 of the transformer 18 in series with the control coil 15. One end of the secondary winding 26 is connected to the wire 25. A condenser 15a is preferably connected across the control coil 15.

The grids of the tubes 16 and 17 are supplied with potential from transformers 27 and 28, respectively, connected to the supply lines 10.

A secondary winding 29 of the transformer 27 is connected through a winding 30 of a reactor 31 to a variable reactor 32 and a resistor 33 connected in series between the transformer secondary leads 34 and 35. The control grid of the tube 17 is connected by a lead 36 to the junction point 37 of the reactor 32 and the resistor 33.

When the reactance of reactor 32 is varied the potential of the point 37 and of the grid is varied in value and in phase relative to the cathode and anode potentials of the tube. When the reactance of the reactor 32 is at its maximum value the potential of point 37 is least, and the plate current of the tube is of maximum value and consequently the reactance of the load reactor 12 is least and the lamps 11 are brightest.

The method of controlling the impedance of the reactor 12 by the grid potential of the tube is also described in my copending application already referred to.

The impedance of the load reactor 12 is also controllable by the tube 16 having its grid connected by a load 38 to the junction point 39 of a variable reactor 40 and a resistor 41 connected by leads 42 and 43 through a winding 44 of a reactor 45 to the secondary 46 of the transformer 28.

The manner in which the load reactor is controlled by tube 16 is similar to that described in connection with tube 17.

A conductor 25' connects conductors 34 and 43 to conductor 25, to complete the grid-filament circuit of the tubes 16 and 17.

In order that the impedance of the load circuit that is fed by the transformer 27 in series with the reactor 31, or other suitable voltage control means may be maintained substantially constant or within desirable operating values, a resistor 33' and a reactor 32' are connected in series between the lines 34 and 35, to form a circuit in parallel with that of the resistor 33 and the reactor 32. The reactors 32 and 32' are so connected that upon manipulation of means to decrease the reactance of reactor 32 the reactance of reactor 32' is increased, and vice versa, so that the joint impedance of the two connected circuits remains substantially constant, or within allowable impedance limits.

A change in the impedance of the grid-plate circuit of the tube 17 will, of course, affect the impedance of the circuit comprising the resistor 33 and the reactor 32, but this change may be compensated for in the adjustment of the values of the reactance of the reactor 32'.

In supply circuit B, a resistor 41' and a re-

actor 40' are connected in parallel with the circuit comprising the resistor 41 and the reactor 40, to operate in the manner, and for the purpose just described in connection with the resistor 33' and the reactor 32' of supply A.

It will be understood hereinafter that when, for simplicity, the effect of changing the reactance of reactors 32 and 40 is discussed, manipulation of means to affect the reactance of these reactors also affects the reactance of the companion reactors 32' and 40'.

It will be obvious to those familiar with the art that other means may be employed to maintain the impedance of the circuit substantially constant so that the reactor 31, or other series means for controlling the voltage of the supply lines, may be kept within permissible operating limits to permit simple means for the control of said series voltage control means.

It will be understood that in stage lighting many load circuits, or groups of lamps, are employed, and that the groups are dimmed, darkened, turned to full brightness many times during a performance. For the sake of clearness only one group of lamps has been shown, and the leads 34, 35, 42 and 43 have been extended to indicate that a plurality of control units and load circuits may be controlled by the master switch means to be described.

The scene lights or groups are preset by the switchboard operator so that by manipulating a master switch at the proper moment many groups of lights are immediately switched out, in, or dimmed by a single movement of the master switch. For example, for a subsequent scene it is desired that upon the movements of a master switch a number of groups of lamps will be simultaneously affected, some to dim, some to dark, and some to full brightness. The operator presets his controls by suitably adjusting the variable reactors 32 of control supply A, for instance, and at the proper moment switches the control from supply B to supply A to obtain a new lighting effect. While the groups are now controlled by control supply A he may produce new lighting effects by varying the potential supply A and variously affecting the grid potential of the tubes connected with that supply.

To enable the operator to conveniently vary the potential of the supply A, the reactor 31 is provided with a control winding 47, and variable resistors 48 and 49 may be connected across the winding by a two-way single pole switch 50.

It will be obvious that if the resistors 48 and 49 are preset to different values of resistance the impedance of the reactor 31 will have different values of impedance as one or the other of the resistors are switched across the control coil 47.

If the variable reactor 32 is adjusted for minimum reactance then variations in the impedance of the reactor 31 have but little effect on lamps 11, for they were brought to the very dim or out condition by the variable reactor 32.

However, if the variable reactor 32 is adjusted for maximum impedance, then variations in the impedance of the reactor 31 vary the brilliancy of the lamps, so that, according to what is done when the operator presets the several grid controls, simple movement of the switch 50 selectively varies the scenic effect of light distribution by selectively affecting the response of the connected tubes to movement of the master switch.

It will now be apparent that with several different settings of the grid control reactors of the several load controlling groups connected to the supply A, selective control of each group of a number of groups is obtained by simple manipulation of the master switch 50.

Selective control of the tubes connected to supply B is similarly obtained by manipulation of a two-way single pole switch to connect either of two variable resistors 52 and 53 across a control winding 54 of the reactor 45.

It will now be clear that the means described enable the operator to preset his controls so that by the manipulation of two simple switches four different scenic effects are obtainable.

An important result obtainable by the instrumentalities described is that of an "overlapping intensity" control of the load circuits. Thus, with switch 51 closed and switch 50 open so that the scenic effects of the groups of load circuits is determined by the tubes connected to supply B, switch 50 may be closed and then the tubes connected to supply A now contribute in determining the new scenic effects obtained, and then switch 51 may be opened to leave supply A alone to determine another new scenic effect.

This overlapping of one control system on the other as a scenic effect determining factor is accomplished without the opening of any grid circuit and without any break in the continuity of the change from one scenic effect to another, that is, the change takes place smoothly without any transient and unwanted dipping and recovery of the load voltage.

In employing two tubes to control a single load circuit, there is, in addition to the advantages heretofore stated, the further important advantage that failure of one of the tubes does not put the load circuit out of control of the operator.

Referring now to Fig. 2, this figure also shows two control supplies A and B to determine the illumination and scenic effects of the group of load circuits for scenes A and B. Four load circuits, or, in the parlance of the art, "individuals" are shown, identified as Foot, Border Number 1, Border Number 2, and Pocket lights. These individuals are each controlled by two thermionic tubes which control the impedance of a reactor in series with the load circuits. The tubes are connected to the alternating current supply mains and effect the reactor in the manner already described in connection with Fig. 1.

The grid control supply for scene A includes a transformer 55 connected to the alternating current mains 56 and having its secondary winding 57 connected to leads 58 and 59. A potentiometer device 60 is connected across the secondary winding, and its movable contact arm 61 is connected to a lead 62.

To control the grid potential of a thermionic tube 63, governing the Footlight circuit, a potentiometer device 64 is connected to the leads 58 and 62 and another potentiometer device 65 is connected to the leads 58 and 59, the contact arms of the two potentiometers being connected together for simultaneous movement as indicated at 66.

A portion of the resistance of the potentiometers 64 and 65 is variable by movement of a member 67 which rigidly connects a movable contact arm on each of the potentiometers so that, if desired, when the operator moves the switch member 66 to the lights-out position there is still enough potential on the grid of the tube 63 to adjust the load circuit so that the lamp filaments are dull red. By this means the operator may adjust the temperature of the lamp filaments for the "lights out" position, and vary the grid

excitation as the size of the light unit in the load circuit is changed. The lighting unit filaments may thus be preheated so that when the unit is suddenly switched to full brilliancy the filament is not injuriously affected by the change in temperature.

The control grid 68 of the tube 63 is connected by a lead 69 to a two-way switch 70 for switching to the potentiometer device 64 or to the potentiometer device 65. When the grid 68 is connected to the potentiometer device 65, it is then independent of the potentiometer master switch 61 so that while other load circuits connected to the transformer 57 may be variously affected by adjustment of the potentiometer master switch 61, its own load circuit is unaffected.

When the grid 68 is connected to the potentiometer device 64 then it is affected by movement of the potentiometer master switch 61 in common with other grids similarly connected, so that it is proportionally and selectively affected relative to other grids similarly connected.

It will be apparent that the other individual lighting units, or load circuits may be connected to the control supply A for control by, or independent of, the master switch 61, after the manner just described in connection with the Footlight circuit.

The control means of the supply B for scene B are similar to those of supply A. They include a transformer 71 having a secondary 72 connected to leads 73 and 74. A master switch 75 of the potentiometer type having a movable contact switch arm 76 is connected between the leads 73 and 74, and a lead 77 is connected to the arm 76.

A potentiometer device 78 is connected to the leads 73 and 77, and a potentiometer device 79 is connected to the leads 73 and 74, the contact arms of both potentiometers being rigidly connected by a member for simultaneous movement as indicated at 80.

Like in potentiometers 64 and 65, provision is made in the potentiometers 78 and 79 for preheating the filaments of the lighting units by movement of a control member 81, to vary the resistance of the end portions of the potentiometers.

A switch 82 is provided so that a control grid 83 of a thermionic tube 84 may be connected alternately to the potentiometers 78 and 79.

A conductor 85 connects conductors 55 and 73 with the filaments of the control tubes to complete the grid-filament circuit of the tubes.

Recapitulating to some extent, while scene A is being produced and the lighting units are being controlled by the supply A, the operator presets the intensity of illumination desired for scene B, the master switch arm 76 being moved along the potentiometer to the end connected to lead 74 so that control grids connected to lead 77 are at full potential.

When scene B is called for he moves the master switch arm 76 towards the end of the potentiometer connected to lead 73 and moves the master switch arm 61 towards the potentiometer end connected to lead 59, thus fading-in supply B and fading-out supply A. There is thus an overlapping of one control on the other, with supply B finally determining the illumination. However, the units which have their control grids connected to be independent of the master switches are not affected by the change-over.

It will be understood that only two supplies A and B have been shown for the sake of clearness, and that in the application of the invention in practice many supplies are provided, and the scenes are preset before the time of a theater performance.

Thus, with five supplies the operator may preset the controls for five lighting effects and take advantage of the presetting in transferring the grid lead of the tubes from one supply to another, or, obviously, in using five tubes in parallel.

To illustrate some of the possibilities of only two supplies, we may assume a condition in which scene A is in action with the footlights dim, the border-lights out, and the pocket-light bright. Scene B has been preset for footlights bright, border-lights dim, and pocket-light out.

One possibility is that scene A can be faded-out and scene B faded-in with the resulting scene that for which B was preset.

Another possibility is that scene B can be faded-in without any change in the master switch of A. Now the result is, footlights bright, border-lights dim, and the pocket-light bright. So, the presetting of scenes A and B actually enables the operator to preset for three scenes or more, depending upon how he manipulates the two master switches.

Of course, a further change can be made in the scene by manipulating the control of any individual unit to fade-in or fade-out a light in a given position, or by the manipulation of the controls of individual units to produce a blending of colors.

It will now be apparent that with a relatively small number of supplies a great many different lighting effects may be obtained with but little effort on the part of the operator, and while the term "scene" has been used herein for ease in description, it is to be understood that the term is synonymous with lighting effect, and that the various preselected lighting effects can be used singly and in combination in various numbers and in any order to provide the required lighting for any part of a play or production.

An important advantage of the combination of instrumentalities described will now be pointed out. If it is assumed that the footlights are preset for full brilliancy, the border-lights for three-quarters brilliancy, and the pocket-lights for half-brilliancy, then, upon movement of the master switch to control the scene, it requires full movement of the master switch from its initial to its final position, to obtain the desired brilliancy. Thus, starting from zero current it requires a full sweep of the master switch arm to produce, respectively, full, three-quarters and half of full brilliancy on the controlled units. Again, movement of the master switch arm from an initial position of zero current to a position producing half brilliancy in the footlights results in a brilliancy in the other units which is substantially just half of that for which the others were preset.

In other words, movement of the master switch arm produces proportional intensity control of all connected units, regardless of the intensity for which each unit was preset.

It should also be noted that with the system herein set forth lighting units of various colors may be preselected, by presetting the controls, so that a desired resultant shade may be produced. For example, red and blue lighting units may be used simultaneously to produce many shades of violet depending upon the comparative number of units of each color and the intensities of the units. Then, with the master control all of the preselected lighting units may be simultaneously dimmed or brightened without color

change in the particular resultant shade, since the various intensities for which the units have been preset will be varied proportionally by the master control.

It will also be undertsood that while a few results and the methods of obtaining them with this invention have been above described, many more lighting effects may be produced by manipulations obvious from the foregoing to one skilled in the art.

I am aware that many changes may be made and numerous details of construction may be varied through a wide range without departing from the principles of this invention, and I, therefore, do not purpose limiting the patent granted hereon otherwise than necessitated by the prior art.

I claim as my invention:

1. In a lighting control system, a lighting unit, a plurality of control means normally connected for joint control of said unit, a plurality of supplies for controlling the energization of said control means, and means for selectively energizing said control means in parallel to selectively control the brilliancy of said lighting unit.

2. In a lighting control system, a lighting unit, a plurality of control means having a common control over the brilliancy of said unit, supplies for controlling the energization of said control means, and a variable means in circuit with each control means for governing the effect of that control means on said unit, whereby the effect of one control means on the brilliancy of said unit may be reduced while the effect of another control means is increased to produce overlapping of brilliancy control.

3. In a lighting control system, a lighting unit, a plurality of parallel connected control means adapted for joint control of the brilliancy of said unit, supplies for controlling the energization of said control means, presettable and variable means in circuit with each of said control means for preselecting the brilliancy of said unit, said presettable means being adapted for concurrent control of said unit whereby there may be an overlapping of brilliancy control and that control means preset for the higher brilliancy will determine the brilliancy of said unit.

4. In a lighting control system, a lighting unit, a plurality of control means normally connected in parallel for joint control of said unit, supplies for controlling the energization of said control means, and means for selectively energizing said control means to selectively control the brilliancy of said lighting unit.

5. In a lighting control system, a lighting unit, a plurality of control means for said unit connected in parallel, means establishing a common connection between said parallel connected control means and said unit whereby said control means are adapted for joint control of said unit, and means in circuit with each of said control means for selectively varying the brilliancy of said unit.

6. In a lighting control system, a lighting unit, control means for controlling the brilliancy of said unit, and a plurality of parallel connected thermionic tubes in circuit between said control means and said unit, whereby control of said unit may be exercised through any of said tubes.

7. In a lighting control system, a lighting unit, a reactance having control coil means in circuit with said unit, a plurality of parallel connected thermionic tubes in series with said control coil means, and means in circuit with said tubes for controlling the brilliancy of said unit through said tubes, whereby any one of said tubes may be selectively used to control said unit.

8. In a lighting control system, a lighting unit, a plurality of parallel connected thermionic tubes, common means connecting said tubes with said unit, and a means in circuit with each of said tubes for controlling the brilliancy of said unit through the respective tube, whereby said unit may be selectively controlled through any of said tubes.

9. In a lighting control system, a lighting unit, a plurality of control means for exercising a common control over said unit, a thermionic tube in circuit with each control means, said tubes being connected in parallel relationship with each other, means for energizing said control means and said tubes, and a common connection between said tubes and said unit, whereby said unit may be selectively controlled through any of said tubes.

10. In a lighting control system, a lighting circuit, a reactor in said circuit provided with a control winding, a plurality of parallel connected rectifiers connected to said control winding to determine the control current flowing therein, and means connected to selectively vary the influence of each of said rectifiers upon said control current.

11. In a lighting control system, a lighting circuit, a reactor in said lighting circuit provided with a control winding, a plurality of rectifier means connected to determine the control current flowing in said control winding, and means connected to selectively vary the influence of each of said rectifiers upon said control current.

12. An alternating supply system, a lighting circuit connected to said system, a reactor connected in said lighting circuit provided with a control winding, a plurality of parallel connected means connected to determine the control current flowing in said winding, and means connected to said supply system and to said parallel connected means to selectively vary the influence of each of said parallel connected means upon said control current.

13. A lighting circuit, a reactor in said circuit provided with a control winding, a rectifier connected to said control winding, another rectifier, means connecting said rectifiers for common control of current in said control winding, and means to selectively vary the influence of each of said rectifiers upon said control current.

14. A lighting circuit, a reactor in said circuit provided with a control winding, means to supply control current in said control winding, other means to supply current in said control winding, means in parallel to connect said supply means for joint control of the current supplied to said control winding, and means to selectively determine the current supplied by each of said supply means.

15. A lighting circuit, a reactor in said lighting circuit provided with a control winding, a plurality of thermionic tubes connected to said control winding to vary the reactance of said reactor, each of said tubes having a control electrode, a plurality of sources of potential for the control electrodes of said tubes, and control means connecting said sources of potential and said control electrodes for joint and selective control of said reactor by said potential sources.

16. A lighting circuit, a reactor in said lighting circuit provided with a control winding, a plurality of sources of potential connected in par-

allel, means connecting said sources of potential with said control winding for individual and joint control of the reactance of said reactor, and means to vary the reactance-controlling effect of said sources of potential upon said reactor.

17. A lighting circuit having lighting units, dimmer means in said circuit, a plurality of sources of potential connected in parallel, means connecting said sources of potential and said dimmer means to vary the light intensity of the lighting units, and means to selectively interconnect said sources of potential for joint control of said dimmer means.

18. A theatre lighting circuit, a reactor in said circuit provided with a control winding, current sources connected in parallel for joint current supply to said control winding, means connecting said current sources with said control winding, and means to selectively vary the current supplied by each of said current sources to said control winding.

19. In a theatre lighting system, a plurality of lighting circuits, individual intensity control means for each circuit, master control means for simultaneous intensity control of said circuits, other master control means for simultaneous intensity control of said circuits, means to connect said master control means in parallel for joint control of said circuits, and means to selectively vary said master control means while they are so connected for joint control of said circuits.

20. In a lighting circuit, intensity control means for said circuit comprising parallel connected thermionic tubes for joint control of said circuit, each of said tubes having a control electrode, and means connected with said control electrodes to selectively affect the controlling influence of each of said tubes upon said lighting circuit.

21. A lighting circuit, a reactor in said circuit having a control winding, a current source for said control winding conditioned to produce one intensity effect in said lighting circuit, another current source for said control winding pre-set conditioned to produce another intensity effect in said lighting circuit, means to connect said current sources in parallel while so conditioned, and means to variously condition said current supplies while in parallel connection.

22. A lighting circuit, a reactor in said circuit having a control winding, a plurality of thermionic tubes in parallel connection, means connecting said parallel connected tubes to said control winding to control current flow in said winding, each of said tubes having a control electrode, a plurality of potential sources for the control electrodes of said tubes, pre-settable means to condition said potential sources, and means to selectively switch said conditioned potential sources into connection with said control electrodes for joint and several control thereby of the reactance of said reactor.

23. In a lighting control system, lighting circuits, means for electrically controlling said lighting circuits, variable means arranged in a plurality of supply circuits for governing said means, means for energizing said supply circuits, voltage control means connected in series in each of said supply circuits, and impedance compensating means in each of said supply circuits to maintain the impedance thereof within desirable operating limits, whereby said voltage control means are maintained with substantially constant effectiveness regardless of the changes in said variable means.

24. In a lighting control system, a plurality of lighting circuits, variable means connected for electrically controlling each circuit for presetting intensity of that circuit, master control means connectible with said variable means, and impedance compensating means in circuit with said variable means to maintain the impedance within desirable operating limits, whereby said master control is substantially constant in effectiveness when in circuit with said variable means regardless of the settings of said variable means.

25. In a lighting control system, a plurality of lighting circuits, a supply circuit for controlling the energization of said lighting circuits, a variable control means in said supply circuit for each lighting circuit, a master control in said supply circuit, and means in said supply circuit to automatically maintain the impedance substantially constant to ensure substantially constant effectiveness of said master control regardless of the settings of said variable control means.

26. In a lighting control system, a plurality of lighting circuits, a supply circuit for controlling the energization of said lighting circuits, said supply circuit including a variable control means for said lighting circuits, a power line, a transformer between said line and said supply circuit, voltage control means in series with the secondary of said transformer, and means in said supply circuit to maintain the impedance of the circuit substantially constant.

27. In combination, in a theater lighting system, a plurality of groups of control means including individual control means, a plurality of lighting circuits to be controlled respectively by individual control means of each group, said control means being each presettable in advance to preselect a corresponding lighting circuit for subsequent energization and predetermined brilliancy of said lighting circuit, a master control for each group in circuit connection with the control means of the respective group, current supply means for said control means, current supply means for said lighting circuit, and load-compensating means in circuit with said group control means adapted to maintain a substantially constant effectiveness of said master control of said group regardless of the setting of said group control means.

28. In a lighting system, a plurality of lighting circuits, current supply means, a plurality of control means each being presettable to control the energization of a lighting circuit and the brilliancy of said circuit, master control means for circuit connection with said plurality of control means, means in circuit with each of said plurality of control means for selective connection of said plurality of control means to said current supply means directly or thorugh said master control means, respectively, and load-compensating means automatically operable to maintain a substantially constant effectiveness of said master control means regardless of the setting or connection of a plurality of said plurality of control means.

29. In combination, in an electrical system, a plurality of lighting circuits, a current source, supply lines connected to said current source, a group of control means connected to said supply lines, said group including a plurality of individuals each presettable to control energization of a lighting circuit, a master control for said group of control means and in circuit connection therewith, and means in circuit connection with

said individuals adapted to maintain a substantially constant effectiveness of said master control in its control of said group regardless of the setting of said individuals.

30. A lighting unit, a first control means, a second control means connected in parallel with said first control means, a plurality of current supplies for said control means, and means in circuit with said current supplies to vary the intensity of current supplied to said control means and thereby selectively transfer control of said unit from one to the other of said control means.

31. A lighting unit, a plurality of control means connected in parallel for joint control of said unit, current supplies connected in circuit with said control means for the energization of said control means, and means in circuit with said current supplies to selectively vary the effectiveness of said control means while maintaining the continuity of the supply circuits.

32. A lighting unit, a plurality of control means normally connected in parallel for joint control of said unit, a plurality of current supplies connected energizing said control means, means in said supply circuits presettable to selectively predetermine energization of said control means, and a master control in circuit with said presettable means for joint control of a plurality of said current supplies.

33. A lighting unit, a first control means connected to said unit, a second control means connected to said unit and normally in parallel with said first control means, a first current supply in circuit with said first control means, a second current supply in circuit with said second control means, and means in circuit with said current supplies to render a selected control means ineffective while maintaining the continuity of its supply circuit.

34. A lighting unit, a first control means connected to said unit, a first current supply connected for energization of said first control means, a second control means connected to said unit, a second supply circuit connected for energization of said second control means, and means to transfer control of said unit from said first control means to said second control means while maintaining the continuity of said first and second supply circuits.

35. A lighting unit, a first control means connected to said unit, a first supply circuit connected for energization of said first control means, means in circuit with said first supply means presettable to determine the brilliancy of said unit, a second control means connected to said unit, a second supply circuit connected for energization of said second control means, means in said second supply circuit presettable to determine the brilliancy of said unit, and means to transfer control of said unit from one control means to the other by superimposing one control means on the other while maintaining the continuity of said supply circuits.

36. A lighting unit, a first control means connected to said unit, a first supply circuit connected for energization of said control means and having means in circuit therewith adjusted to secure a desired low brilliancy of said unit, a second control means connected to said unit, a second supply circuit for energization of said second control means and having means in circuit therewith presettable to secure a desired high brilliancy of said unit, and means to superimpose said second control means on said first control means to secure a high brilliancy of said unit while maintaining said supply circuits in their adjusted condition and while maintaining the continuity of said supply circuits.

37. A plurality of lighting units, a pair of supply lines, a master control connected in parallel to said lines, a conductor connected to a variable point on said master control, a plurality of presettable variable means connected to one of said supply lines and to said conductor, load compensating means in circuit with said conductor and with said presettable variable means to compensate for the load imposed by the variable setting of said variable means, said presettable means being each connected with a lighting unit to vary the brilliancy of the unit, respectively, whereby brilliancies preselected by said presettable means are varied proportionally upon movement of said conductor to selected points on said master control.

38. A plurality of lighting units, a pair of supply lines, a master control connected in parallel to said lines, a conductor connected to a variable point on said master control, a first group of presettable variable means connected to one of said supply lines and to said conductor, a second group of presettable variable means connected to said pair of supply lines, means for selectively connecting a lighting unit at will to a variable means of one or the other of said groups of presettable means for control by the master or by an individual variable means, respectively, and load compensating means in circuit with said conductor and with said first group of presettable variable means to compensate for the load imposed by the variable setting of said variable means.

39. An alternating current supply system, a power unit connected to said system, a reactor in series with said unit, said reactor being provided with a control winding, control means normally connected in parallel for joint control of current in said control winding, supply circuits connected to said control means for energization of said control means, and means to selectively de-energize a selected control means while maintaining the continuity of its supply circuit.

40. An alternating current supply system, a power unit connected to said system, a reactor in series with said unit, said reactor being provided with a control winding, a pair of current sources connected in parallel for joint current supply to said winding, and means to transfer control of said unit from one to the other of said current sources while maintaining the continuity of the circuits connecting said sources and said winding.

41. In a lighting control system, a plurality of lighting circuits including lighting units combinable to produce colors of desired shades, variable means in circuit with each lighting circuit presettable to determine in advance the shade desired from the respective lighting circuit, supply lines, a master control connected with said supply lines and with said variable means, and load compensating means in circuit with said master control and with said variable means to compensate for the load imposed by the variable setting of said variable means whereby movement of said master control is effective to vary the brilliancies of said lighting circuits to maintain the desired shade.

ALBERT R. LOCKE.