March 12, 1940. R. I. SMITH 2,193,242

FABRIC MOLD

Filed Feb. 15, 1937 3 Sheets-Sheet 1

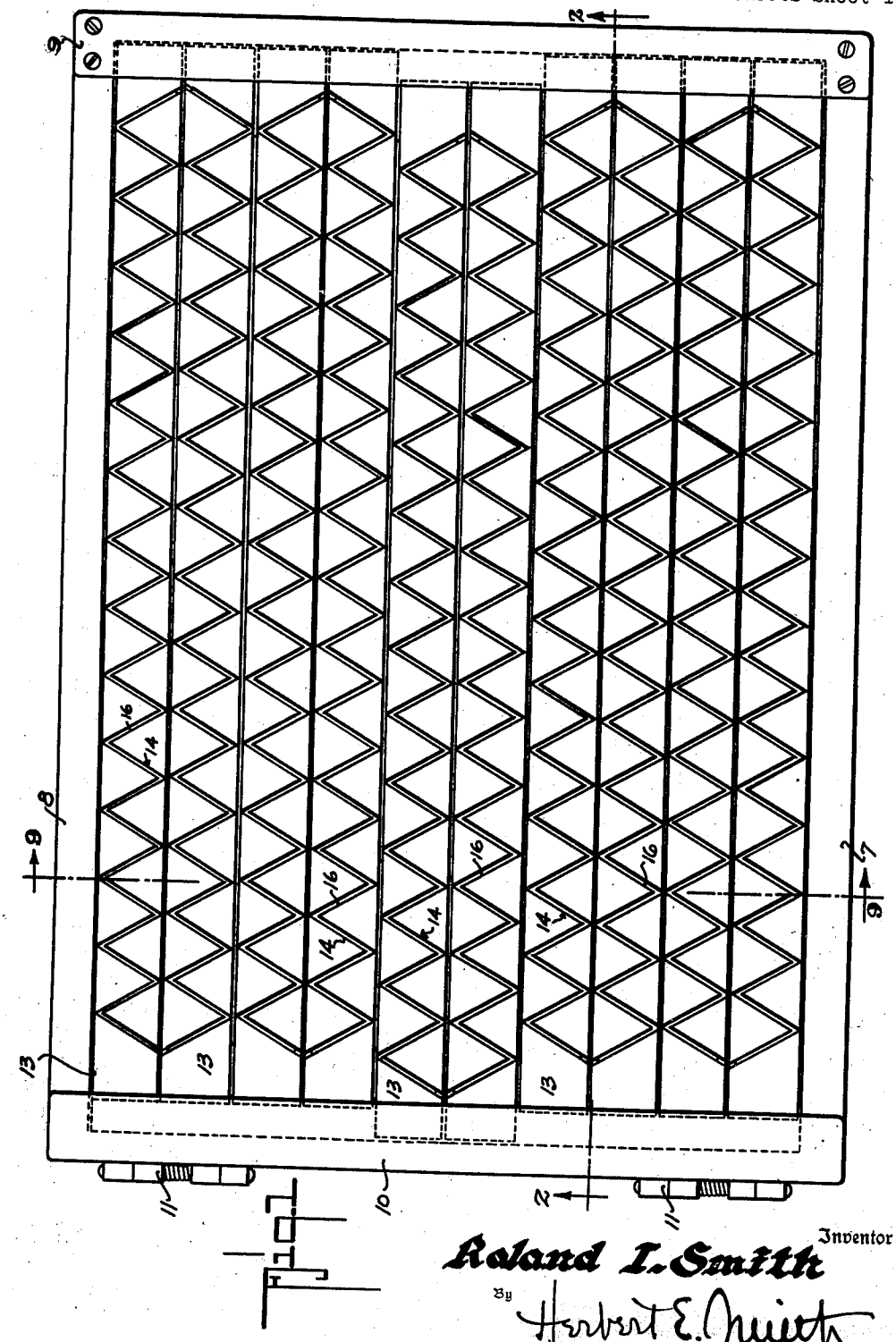

Roland I. Smith Inventor

By Herbert E. Smith

Attorney

March 12, 1940. R. I. SMITH 2,193,242

FABRIC MOLD

Filed Feb. 15, 1937 3 Sheets-Sheet 2

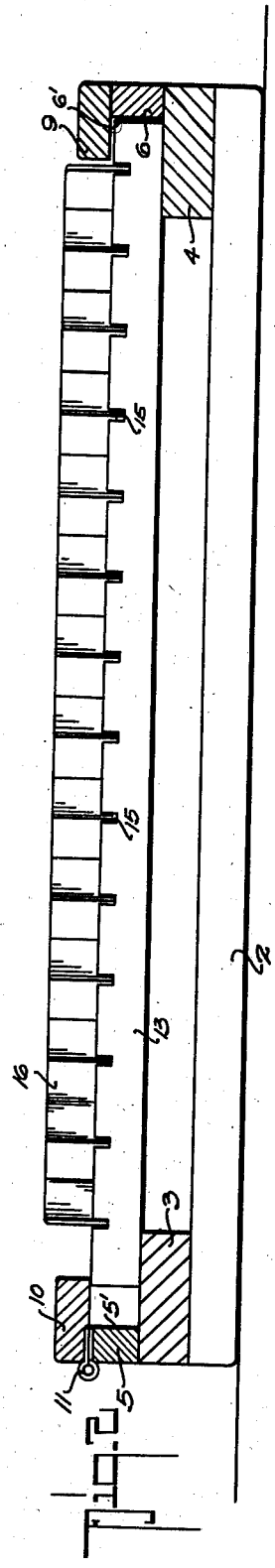

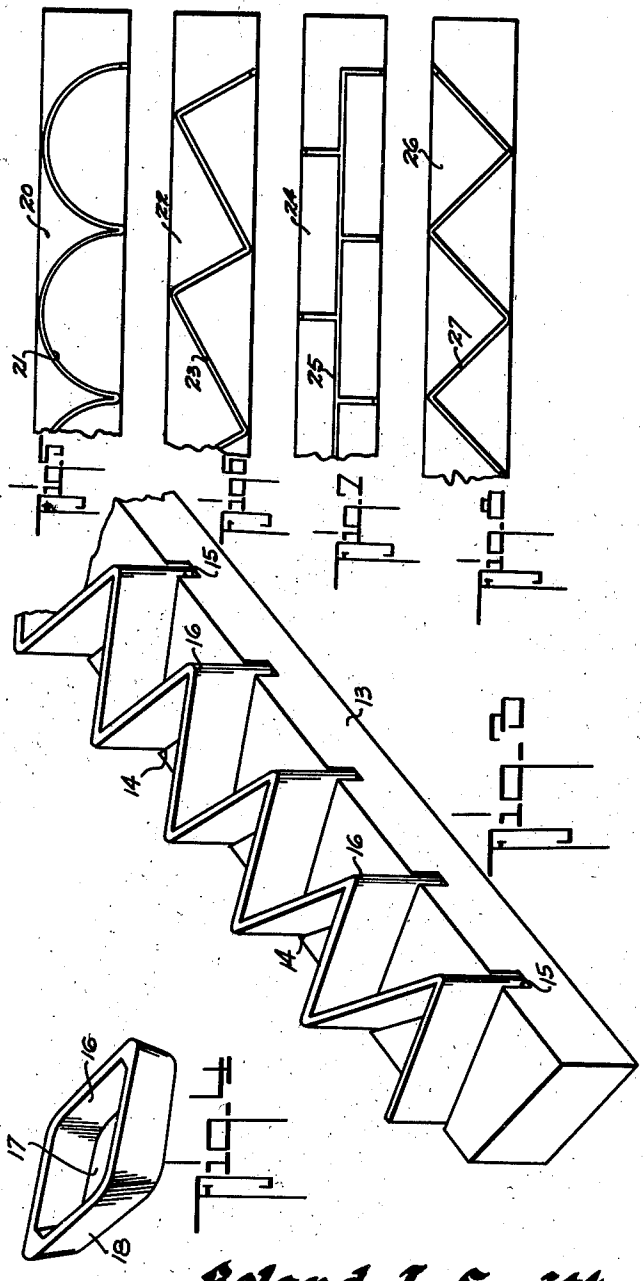

Roland I. Smith
Inventor

By Herbert E. Smith

Attorney

March 12, 1940. R. I. SMITH 2,193,242

FABRIC MOLD

Filed Feb. 15, 1937 3 Sheets-Sheet 3

Fig. 9

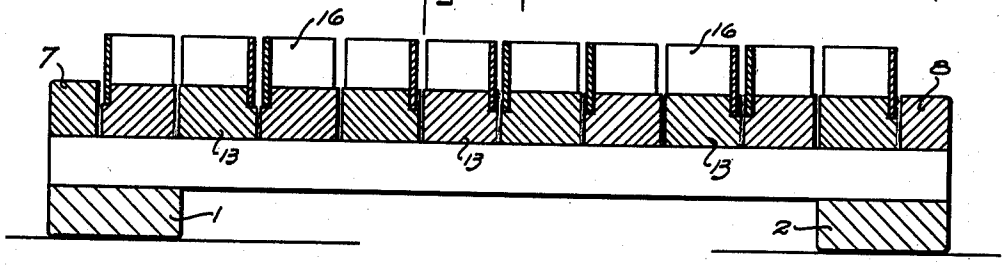

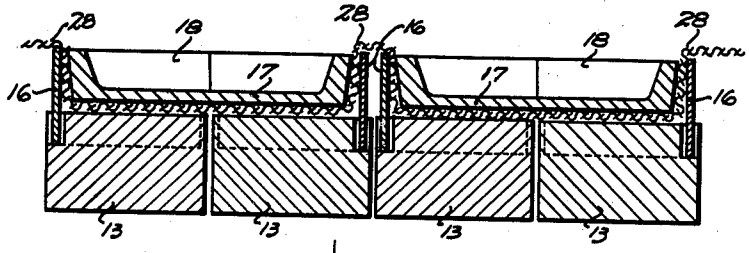

Fig. 10

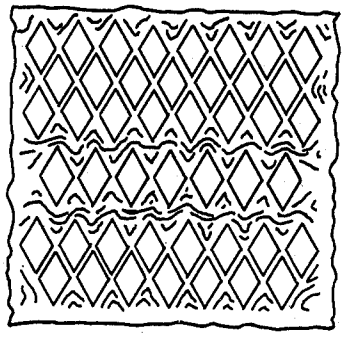

Fig. 11

Roland I. Smith
Inventor

By Herbert E. Smith

Attorney

Patented Mar. 12, 1940 2,193,242

UNITED STATES PATENT OFFICE

2,193,242

FABRIC MOLD

Roland I. Smith, Spokane, Wash.

Application February 15, 1937, Serial No. 125,819

7 Claims. (Cl. 154—1)

My present invention relates to an improved fabric mold which while adapted for various purposes, is particularly designed for molding or pressing ornamental patterns in the material used for lining caskets.

I am aware that in the past, it has been customary to treat casket lining cloth or fabric in such a manner that raised or tufted-appearing designs result, but at the present time the structures or means employed for this purpose are not capable of creating different designs without the necessity of using different molds.

It is therefore, an object of this invention to provide a mold for creating designs or ornamental patterns upon a casket lining-cloth in which parts of the mold may be adjusted and interchanged by the operator to create different designs employing, of course, the motif of the mold, but spacing the figures of the designs to form diversified and unique patterns.

In the accompanying drawings I have illustrated one complete example of the physical embodiment of my invention according to one mode I have thus far devised together with some modifications but it will be understood that changes and alterations may be made in these exemplifying structures within the scope of the appended claims without departing from the principles of my invention.

In the drawings:

Figure 1 is a top plan view of the device of my invention showing the frame, and one form of a mold for creating diamond shaped designs in a pattern.

Figure 2 is a sectional view of my frame and mold taken at line 2—2 of Figure 1.

Figure 3 is an enlarged perspective view of a mold.

Figure 4 is an enlarged perspective view of a weight or pressing core for the mold.

Figures 5, 6, 7, and 8, are partial views of various shapes of molds for creating different designs.

Figure 9 is a sectional view of my frame and mold taken at line 9—9 of Figure 1.

Figure 10 is an enlarged sectional view of a mold and its pressing core or weight showing the cloth in molding position.

Figure 11 is a plan view of a piece of material which has been treated by the device of my invention and indicates a pattern style which may be formed.

Referring to Figures 1, 2, and 9, in constructing my frame I employ a base comprising spaced bars as 1 and 2, and mold supporting bars 3 and 4 secured along the edges of base 1 and 2.

Above bars 3 and 4 I provide an enclosing rectangular frame including members 5, 6, 7 and 8. On the frame enclosing member 6 I secure on overlapping strip or fixed end plate 9 by means of screws 9', and the strip 9 is of substantially greater width than the member 6. On the member 5 I mount a movable spring-pressed retaining strip or end-plate 10 by means of hinges 11.

Thus I provide a frame having opposed end-plates 9 and 10 for the mold which will retain the mold sections in place until it is desired to remove the same, and it will be understood that the shape or size of the frame may be varied.

Adapted to rest upon supporting bars 3 and 4, within the enclosing frame I utilize a number of parallel, longitudinally extending mold-sections as 13 of sufficient length to enable the sections to overlap and rest upon the bars 3 and 4, but substantially less than the distance between the inner edges 5' and 6' of the members 5 and 6 to leave extension spaces at the ends of the sections. Any required number of these mold-sections may be used according to the size of the cloth undergoing treatment. In order to place the mold sections in the frame the hinged plate or strip 10 is elevated and the ends of the sections are then inserted under the fixed overhanging strip 9, and the spring-closed plate or strip is then lowered, and the mold sections are thus retained in position.

On one of the wider faces or upper faces of these mold sections 13, I provide, as shown in Figure 3, a continuous zig-zag formation consisting of angularly disposed grooves 14 which merge at 15 to form notches in the lateral edges of the mold-sections.

Within the zig-zag groove 14 I locate a vertically disposed mold wall 16 which may be made of metal or other suitable material. It will be understood that each of the walls 16 in a pattern are identical with the others, and that these particular walls may be alined to form diamond-shaped molds as shown in Figure 1.

In Figure 4 I have illustrated a removable core or presser-weight shaped as a hollow diamond and adapted to fit neatly into the diamond shaped spaces formed by the walls of adjoining mold-sections 13. This presser weight comprises the base 17, and the side walls 18, which walls, on their outer faces, converge toward the base 17. By thus shaping the walls 18 with upwardly flaring faces the cloth is not pressed against the walls of the mold, except at the top edges of the

walls as shown in Figure 10, thereby preventing the formation of sharp edges which are undesirable for the stated purpose of the cloth.

The presser weight or core is of lesser depth than the mold walls 16, again referring to Figure 10, and it will be seen that the cloth is not pressed against the bottom of the mold because the presser-weight is supported in a pocket of the fabric, with the bottom of the pocket barely touching the mold section 13 and the tension of the cloth supports the weight.

Inasmuch as the mold-sections are of lesser length than the distance between the inner faces 5' and 6' of the bars 5 and 6, it will be seen that these mold sections may be moved longitudinally, singly or in numbers, thus providing for variations in the designs formed by the mold-walls without the necessity of using differently formed mold-walls. In Figure 1, I have shown the two central mold sections moved longitudinally to the left to vary the design. Any one or more of the sections may be moved to the left or right as desired, and thus a multiplicity of different designs may be created in the fabric.

In Figures 5, 6, 7, and 8, I have illustrated modified forms of mold sections as 20, 22, 24, and 26, which are interchangeable and may be used in the mold frame.

In Figure 5, mold section 20 is formed, as in the description of section 13, but with mold-wall 21 shaped as a semi-circle and by the use of two sections as 20 alined with each other, a complete circle may be formed.

Figure 6 shows the mold section 22 provided with mold-walls 23 in the shape of a right angle triangle (not equilateral) and two alined mold sections will form diagonally disposed oblongs.

Figure 7 shows mold sections 24 provided with brick-shaped mold-walls 25.

Figure 8 shows the mold section 26 provided with mold walls 27 in the shape of an equilateral triangle which when alined with another mold-wall 27 will form angularly disposed squares.

In the operation of my invention, I first place the mold sections as 13, 20, 22, 24, and 26, in the frame and adjust as desired.

The cloth or fabric is then spread over the mold and the weights or cores are pressed into the molds over the cloth. The cloth is then forced into the molds as seen in Figure 10. Of course, the mold section 13 may be replaced by any other mold section as desired.

After the fabric or cloth has been thus prepared the usual procedure now follows wherein the cloth in the molds is subjected to steam treatment during which the cloth is pressed into the shape of the mold, and after drying, the cloth maintains its molded shape.

The weights or cores are then removed, and a backing, usually of rough material, is glued to the protruding portions 28 (Figure 10) of the under face of the tufted cloth.

When dry, the cloth, glued as above to the backing, may be removed from the mold and the cloth will remain in the molded shape presenting the desired design.

Having thus fully described my invention what I claim as new and desire to secure by Letters Patent is:

1. In a device for molding fabrics for linings and trimmings as described, the combination with a frame, of a mold supported in the frame and comprising longitudinally adjustable sections supporting vertically disposed mold walls, and means for retaining said mold in said frame.

2. In a device for molding fabrics for linings and trimmings as described, the combination with a frame, of a plurality of mold sections supported in said frame, mold walls vertically disposed upon said mold sections, means for aligning longitudinally two or more of said mold sections to complete a mold.

3. In a device as described, the combination with a frame, of a plurality of grooved mold sections supported in the frame, mold walls mounted in said grooves, means for aligning longitudinally one or more of said mold sections to form a complete mold.

4. In a device as described, the combination with a frame, of a plurality of adjustable grooved mold sections supported in said frame, mold walls mounted in said grooves, means for aligning longitudinally said mold sections to form a complete mold.

5. In a fabric mold, a plurality of unitary mold sections arranged with respect to each other in parallelism, each unit comprising a mold section having grooves in its upper face and mold walls inserted in said grooves to form a partial pattern.

6. In a fabric mold, a plurality of unitary mold sections arranged with respect to each other in parallelism and longitudinally adjustable, each unit comprising a mold section having grooves in its upper face and mold walls inserted in said grooves to form a partial pattern.

7. In a fabric mold, a frame comprising bars arranged in spaced relation to each other, supporting bars supported on the spaced bars and at right angles thereto, enclosing members forming a frame and mounted upon the supporting bars, a fixed end plate supported at one end of the said frame and forming a groove, a hinged end plate on the opposite end of the frame forming a groove, and mold sections insertable in said frame and retained by said end plates.

ROLAND I. SMITH.