A. LIETZ.

TRANSIT.

APPLICATION FILED JAN. 18, 1915.

1,159,510.

Patented Nov. 9, 1915.

2 SHEETS—SHEET 1.

Fig. 1.

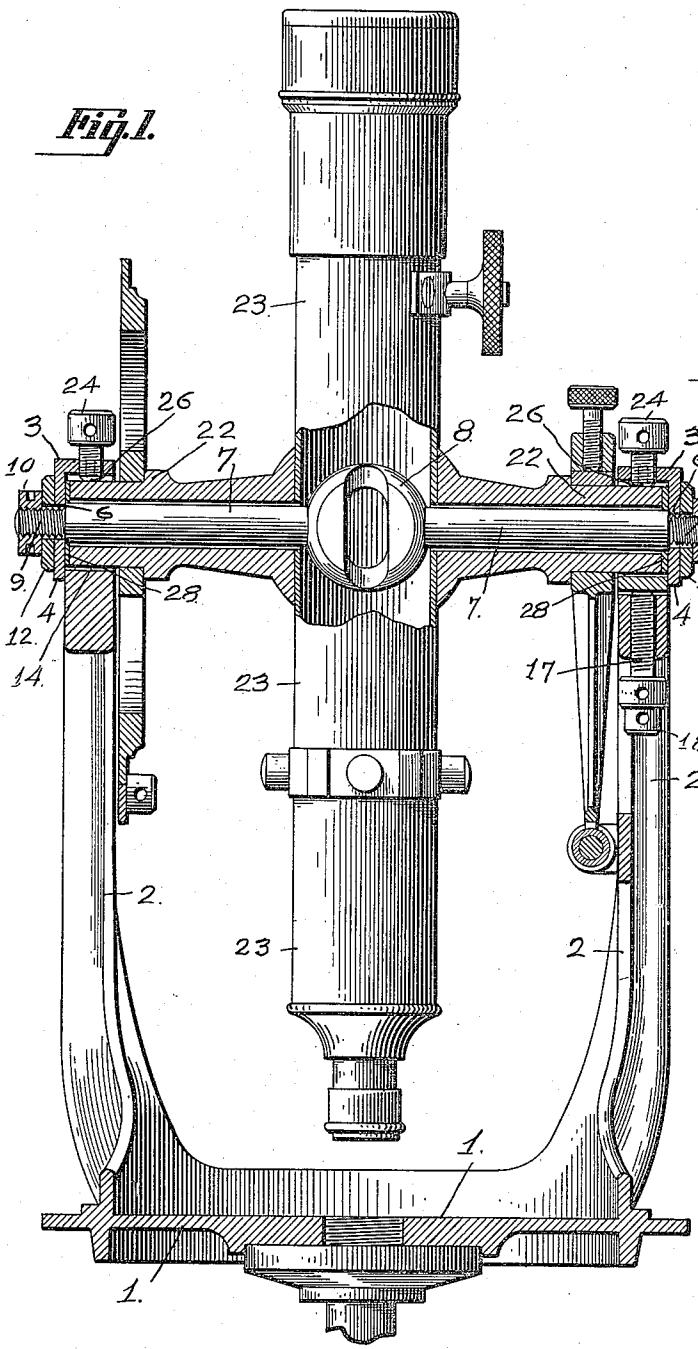

Fig. 2.

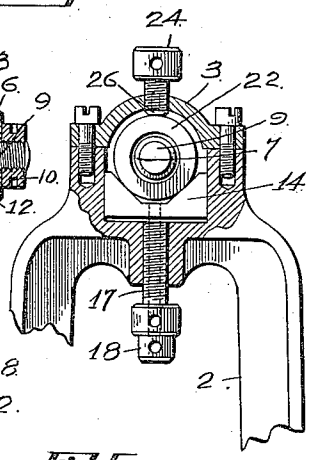

Fig. 5.

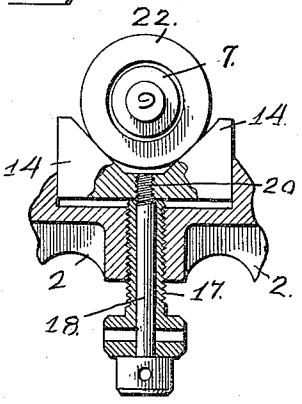

Witnesses

Karl F. Schmidt

George Kromrey.

Inventor

Adolph Lietz.

By Arthur L. Slee

His Atty

COLUMBIA PLANOGRAPH CO., WASHINGTON, D. C.

A. LIETZ.

TRANSIT.

APPLICATION FILED JAN. 18, 1915.

1,159,510.

Patented Nov. 9, 1915.

2 SHEETS—SHEET 2.

Fig. 3.

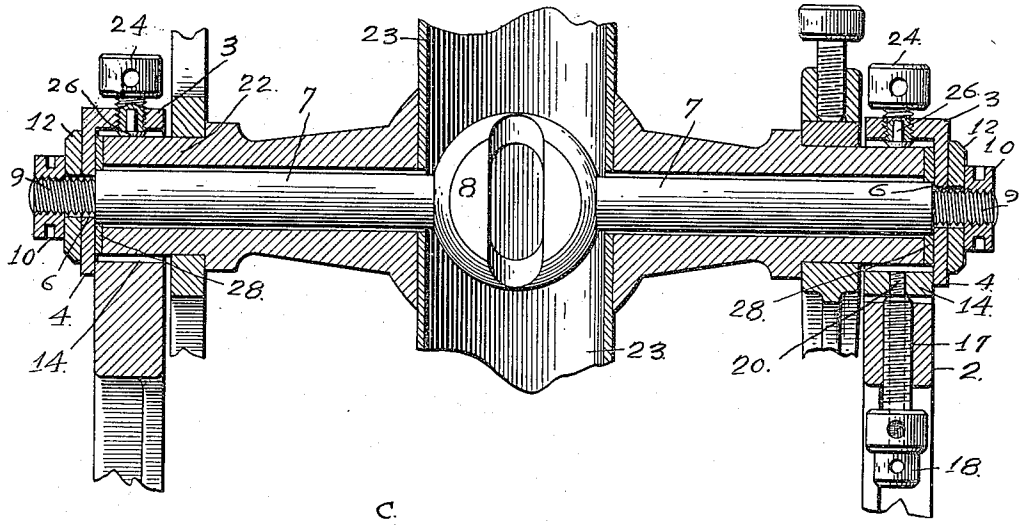

Fig. 4.

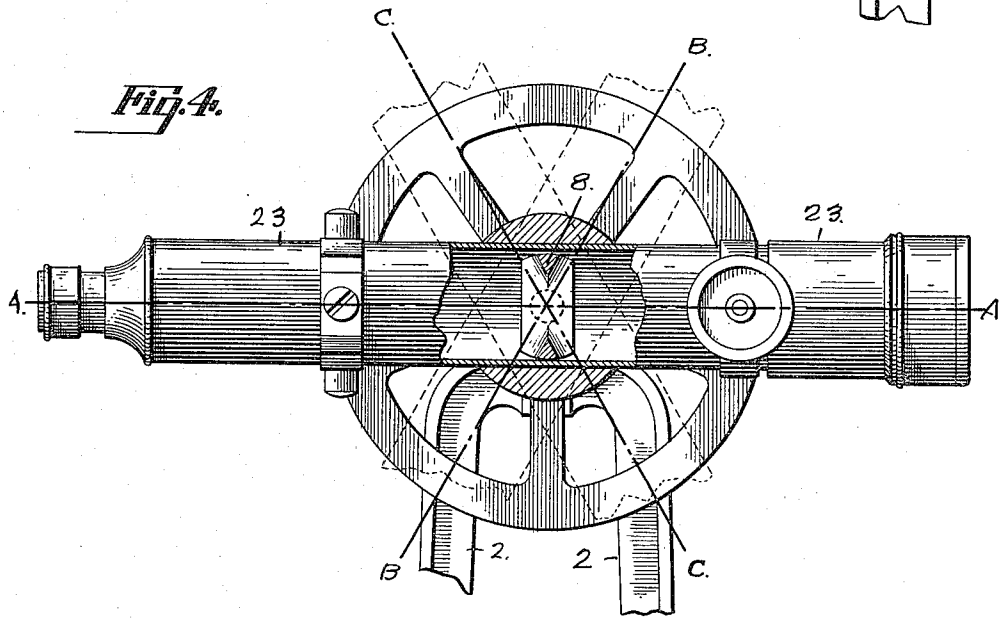

Witnesses

Karl F. Schultz

George Kenney

Inventor

Adolph Lietz.

By Arthur L. Slee.

His Atty

UNITED STATES PATENT OFFICE.

ADOLPH LIETZ, OF SAN RAFAEL, CALIFORNIA.

TRANSIT.

1,159,510. Specification of Letters Patent. Patented Nov. 9, 1915.

Application filed January 18, 1915. Serial No. 4,961.

To all whom it may concern:

Be it known that I, ADOLPH LIETZ, a citizen of the United States, residing in the city of San Rafael, county of Marin, and State of California, have invented a new and useful Improvement in Transits, of which the following is a specification.

My invention relates to transits wherein a rigid rectangular frame is provided for the support of the telescope; and the objects of my invention are first, to provide an improved rigid support for the telescope that will prevent lateral or other movement of the same and thereby preserve the coincidence of the line of collimation with the mechanical center of the frame; second, to provide improved means for rotatably supporting the telescope upon a rigid rectangular frame; third, to provide improved means whereby the telescope may be permanently adjusted; and fourth, to provide improved means for adjusting and securing the bearings of the tubular telescope trunnions in proper position. I accomplish these several features by means of the device disclosed in the drawings forming a part of the present specification wherein like characters of reference are used to designate similar parts throughout the said specification and drawings and in which—

Figure 1 is a broken vertical sectional view of the upper portion of a transit, disclosing the improved manner in which the hollow tubular trunnions of the telescope are rotatably mounted upon the said rectangular frame, Fig. 2 is a broken detailed elevation of the end of one of the tubular telescope trunnions, disclosing the manner in which the end of the said trunnion is adjustably mounted within the top of one of the standards forming the side portion of the rigid rectangular supporting frame, Fig. 3 is an enlarged broken sectional view of the tubular telescope trunnions disclosing the manner in which the same are rotatably mounted around the top connecting rod of the rigid rectangular frame, Fig. 4 is a broken detailed view of the side elevation of the telescope in a horizontal position, disclosing the enlarged apertured portion of the top connecting rod arranged so as not to intercept the line of collimation through the telescope when the same is inclined at various angles as indicated in dotted lines, and Fig. 5 is an enlarged detailed view of the movable pillow block seated in the upper end of one standard, disclosing the manner in which the said pillow block is adjustably secured to the top of the said standard.

Referring to the drawings, the numeral 1 is used to designate what I term a top plate, having the usual standards 2 integral therewith. To the upper end of each standard 2 is secured a cap 3 having a depending portion 4 with an aperture 6 therein. A rigid rectangular supporting frame is thus formed by means of the top plate 1, standards 2 and a rod 7 having an enlarged apertured central portion 8 therein, the purpose of which will hereinafter be more fully described.

The rod 7 is provided with the reduced threaded portions 9 which project through the apertures 6 on the depending portions 4 of the caps 3 and are engaged by means of suitable nuts 10 which rest against the washers 12 so that when the said nuts 10 are tightened the ends of the larger diameter of the rod 7 will be drawn tightly against the depending portions 4 of the caps 3 and thereby rigidly secured. In this manner I have provided a rigid rectangular supporting frame composed of the top plate 1, the standards 2 and the rod 7. The top of one standard 2 has slidably mounted therein a V-shaped bearing 14. The other standard 2 has a V-shaped bearing formed integral therewith. Within the standard 2 having the movable bearing is inserted a hollow screw 17 which engages the under side of the said movable bearing 14. Within the hollow screw 17 is inserted a second screw 18 having a threaded portion 20 which engages the V-shaped bearing 14. Within the converging seat of each V-shaped bearing rests a tubular trunnion 22 of the telescope 23. A screw 24 is provided in the top of each cap 3, the lower ends of the said screws 24 being in turn provided with relatively soft ends 26, composed of fiber or like material, the purpose of which will hereinafter be more fully described. The ends of the trunnions 22 being mounted within the converging sides of the V-shaped bearings the horizontal adjustment of the axis of the telescope is obtained by means of the hollow screw 17 which will raise or lower the movable V-shaped bearing 14 and the end of the tubular trunnion 22 therein. When said adjustment is obtained, it is permanently secured by turning the screw 24 in the cap 3 until the soft fiber end 26 thereof engages the upper periphery of the end of the said

tubular trunnion 22. The V-shaped bearing 14 is secured in position by means of the screw 18 within the hollow screw 17. By turning the said screw 18 to the right, the threaded portion 20 thereof will engage the V-shaped bearing 14 and hold the same firmly onto the upper end of the hollow screw 17, thus acting in the same capacity as a check or jam nut.

Between the ends of the tubular trunnions 22 and the depending portions 4 of the caps 3, I have inserted the washers 28, one of the said washers being slightly thinner than the other. In obtaining the lateral adjustment so as to retain the coincidence of the line of collimation with the mechanical center of the transit, if the said line of collimation is found to be slightly to one side of the mechanical center of the transit, the position of the washers 28 is reversed. The difference between the thicknesses of the said washers is so slight that by reversing the same the line of collimation will be shifted ever so slightly.

In so far as is possible with mechanical skill, in making up the mechanical parts of the transit, the parts are of a dimension which will cause the line of collimation to coincide with the mechanical center of the transit; but as the said coincidence must necessarily be absolutely correct, it sometimes requires a lateral shift less than the breadth of a line to cause the absolutely perfect coincidence required. I have found this to be easily obtainable by making the washers 28 one very slightly thicker than the other, so that when the instrument is first assembled and it is found that the line of collimation is slightly to one side of the mechanical center of the device, the lateral shift occasioned by reversing the thick and the thin washers 28 is all that is required to produce an absolutely perfect adjustment and the coincidence of the line of collimation with the mechanical center of the transit hereinbefore mentioned.

The aperture within the enlarged central portion 8 of the rigid rod 7 is obtained by the intersection of two holes drilled or bored therethrough, the center of each hole being coincident with the line of collimation of the telescope when inclined at its extreme angle in either direction as indicated by the lines C—C and B—B, in Fig. 4 of the drawings. This gives an uninterrupted path for the line of collimation A—A in all positions of the telescope.

It is obvious from the foregoing that I have provided a rigid rectangular frame for the support of the telescope, said rigid frame consisting of the top plate 1, the vertical standards 2 and the rigid rod 7 with its enlarged central apertured portion 8. It is also evident that I have provided means for adjusting the horizontal position of the axis of the telescope as well as means for securing said adjustment. I have also provided means for securing a permanent lateral adjustment of the telescope relatively to the mechanical center of the transit. By rigidly securing the tops of the standards 2 together by means of the rod 7, I have provided greater stability to the supporting frame. The advantage of this arrangement is that the telescope is retained in its correct position relatively to the line of collimation and is not capable of being deflected as in transits where the upper ends of the standards are not secured together by a rigid axis or otherwise, and are consequently capable of lateral movement. By rigidly securing the upper ends of the standards together, a practically integral and rigid rectangular supporting frame is formed for the telescope.

The details of construction are so susceptible to variation that I do not wish to confine myself to the precise construction shown herein, but rather to avail myself of any modifications that may properly fall within the scope of my invention.

Having thus described my invention what I claim as new and desire to secure by Letters Patent is—

1. A transit comprising a suitable top plate having parallel vertical standards secured thereto; a centrally apertured rod rigidly secured between the tops of the standards; and a suitable telescope having the trunnions thereof rotatably mounted within the tops of the standards and independently of the apertured rod.

2. A transit comprising a suitable top plate having parallel vertical standards secured thereto; a centrally apertured rod rigidly secured between the tops of the standards; a suitable telescope having the trunnions thereof rotatably mounted within the tops of the standards and independently of the apertured rod; and means for adjusting one of the trunnions vertically.

3. A transit comprising a suitable top plate having parallel vertical standards integral therewith; a V-shaped bearing formed integral with the top of one standard; a vertically movable V-shaped bearing slidably mounted within the top of the other standard; a suitable telescope having tubular trunnions, said trunnions being rotatably mounted within the V-shaped bearings; a centrally apertured rod arranged within the hollow trunnions of the telescope and having the ends thereof rigidly secured to the tops of the standards; and means arranged to adjust the movable V-shaped bearing vertically.

4. A transit comprising a suitable top plate having parallel vertical standards integral therewith; a V-shaped bearing formed integral with the top of one standard; a ver-

tically movable V-shaped bearing slidably mounted within the top of the other standard; a suitable telescope having tubular trunnions, said trunnions being rotatably mounted within the V-shaped bearings; a centrally apertured rod arranged within the hollow trunnions of the telescope and having the ends thereof rigidly secured to the tops of the standards; and a screw within one of the standards arranged to elevate the movable V-shaped bearing.

5. A transit comprising a suitable top plate having parallel vertical standards integral therewith; a V-shaped bearing formed integral with the top of one standard; a vertically movable V-shaped bearing slidably mounted within the top of the other standard; a suitable telescope having tubular trunnions, said trunnions being rotatably mounted within the V-shaped bearings; a centrally apertured rod arranged within the hollow trunnions of the telescope and having the ends thereof rigidly secured to the tops of the standards; a screw within one of the standards arranged to elevate the movable V-shaped bearing; and a second screw operatively connected to the movable V-shaped bearing and arranged to hold the same onto the first mentioned screw.

6. A transit comprising a suitable top plate having vertical parallel standards formed integral therewith; a V-shaped bearing formed integral with the top of one standard; a vertically movable V-shaped bearing slidably mounted within the top of the other standard; a cap secured to the top of each standard and having an apertured depending portion extending below and outside of each V-shaped bearing, a suitable telescope having tubular trunnions, the ends of the said trunnions being rotatably mounted within the V-shaped bearings; a centrally apertured rod having reduced threaded portions extending through the apertures in the depending portions of the caps, the ends of the larger diameter of the said rod resting against the inner surfaces of the said depending portions; suitable nuts arranged to engage the reduced threaded portions of the centrally apertured rod and rigidly retain the depending portions of the caps against the ends of the larger diameter of the said rod; and means arranged to adjust the movable V-shaped bearing vertically.

7. A transit comprising a suitable top plate having vertical parallel standards formed integral therewith; a V-shaped bearing formed integral with the top of one standard; a vertically movable V-shaped bearing slidably mounted within the top of the other standard; a cap secured to the top of each standard and having an apertured depending portion extending below and outside of each V-shaped bearing; a suitable telescope having tubular trunnions, the ends of the said trunnions being rotatably mounted within the V-shaped bearings; a centrally apertured rod having reduced threaded portions extending through the apertures in the depending portions of the caps, the ends of the larger diameter of the said rod resting against the inner surfaces of the said depending portions; suitable nuts arranged to engage the reduced threaded portions of the centrally apertured rod and rigidly retain the depending portions of the caps against the ends of the larger diameter of the said rod; means arranged to adjust the movable V-shaped bearing vertically; and means arranged to permanently secure the lateral adjustment of the telescope.

8. A transit comprising a suitable top plate having vertical parallel standards formed integral therewith; a V-shaped bearing formed integral with the top of one standard; a vertically movable V-shaped bearing slidably mounted within the top of the other standard; a cap secured to the top of each standard and having an apertured depending portion extending below and outside of each V-shaped bearing; a suitable telescope having tubular trunnions, the ends of the said trunnions being rotatably mounted within the V-shaped bearings; a centrally apertured rod having reduced threaded portions extending through the apertures in the depending portions of the caps, the ends of the larger diameter of the said rod resting against the inner surfaces of the said depending portions; suitable nuts arranged to engage the reduced threaded portions of the centrally apertured rod and rigidly retain the depending portions of the caps against the ends of the larger diameter of the said rod; means arranged to adjust the movable V-shaped bearing vertically; means arranged to permanently secure the lateral adjustment of the telescope; and a suitable screw within each cap arranged to engage the upper surface of each tubular trunnion.

9. A transit comprising a suitable top plate having vertical parallel standards formed integral therewith; a V-shaped bearing formed integral with the top of one standard; a vertically movable V-shaped bearing slidably mounted within the top of the other standard; a cap secured to the top of each standard and having an apertured depending portion extending below and outside of each V-shaped bearing; a suitable telescope having tubular trunnions, the ends of the said trunnions being rotatably mounted within the V-shaped bearings; a centrally apertured rod having reduced threaded portions extending through the apertures in the depending portions of the caps, the ends of the larger diameter of the said rod resting against the inner surfaces of the said depending portions; suitable nuts arranged to engage the reduced threaded por-

tions of the centrally apertured rod and rigidly retain the depending portions of the caps against the ends of the larger diameter of the said rod; a hollow screw mounted within one standard and arranged to adjust the movable V-shaped bearing vertically; and a second screw rotatably mounted within the first mentioned screw and operatively connected to the movable V-shaped bearing and arranged to hold the said bearing rigidly onto the hollow screw.

10. A transit comprising a suitable top plate having vertical parallel standards formed integral therewith; a V-shaped bearing formed integral with the top of one standard; a vertically movable V-shaped bearing slidably mounted within the top of the other standard; a cap secured to the top of each standard and having an apertured depending portion extending below and outside of each V-shaped bearing; a suitable telescope having tubular trunnions, the ends of the said trunnions being rotatably mounted within the V-shaped bearings; a centrally apertured rod having reduced threaded portions extending through the apertures in the depending portions of the caps, the ends of the larger diameter of the said rod resting against the inner surfaces of the said depending portions; suitable nuts arranged to engage the reduced threaded portions of the centrally apertured rod and rigidly retain the depending portions of the caps against the ends of the larger diameter of the said rod; a hollow screw mounted within one standard and arranged to adjust the movable V-shaped bearing vertically; and a second screw rotatably mounted within the first mentioned screw and operatively connected to the movable V-shaped bearing and arranged to hold the said bearing rigidly onto the hollow screw; and a washer arranged to fill the space between the end of each tubular bearing and the depending portion of the caps, one washer being slightly thicker than the other.

11. A transit comprising a suitable top plate having vertical parallel standards formed integral therewith; a V-shaped bearing formed integral with the top of one standard; a vertically movable V-shaped bearing slidably mounted within the top of the other standard; a cap secured to the top of each standard and having an apertured depending portion extending below and outside of each V-shaped bearing; a suitable telescope having tubular trunnions, the ends of the said trunnions being rotatably mounted within the V-shaped bearings; a centrally apertured rod having reduced threaded portions extending through the apertures in the depending portions of the caps, the ends of the larger diameter of the said rod resting against the inner surfaces of the said depending portions; suitable nuts arranged to engage the reduced threaded portions of the centrally apertured rod and rigidly retain the depending portions of the caps against the ends of the larger diameter of the said rod; a hollow screw mounted within one standard and arranged to adjust the movable V-shaped bearing vertically; and a second screw rotatably mounted within the first mentioned screw and operatively connected to the movable V-shaped bearing and arranged to hold the said bearing rigidly onto the hollow screw; a washer arranged to fill the space between the end of each tubular bearing and the depending portion of the caps, one washer being slightly thicker than the other; and a screw within each cap and having a relatively soft lower end arranged to bear upon the upper surface of the end of each tubular trunnion.

In witness whereof I have hereunto set my signature in the presence of two subscribing witnesses.

ADOLPH LIETZ.

Witnesses:
O. G. HAUSSER,
MAX DE HAAS.

Copies of this patent may be obtained for five cents each, by addressing the "Commissioner of Patents, Washington, D. C."