5 Sheets—Sheet 1.

L. POIRIER.

BRONZING-MACHINES.

No. 194,261. Patented Aug. 14, 1877.

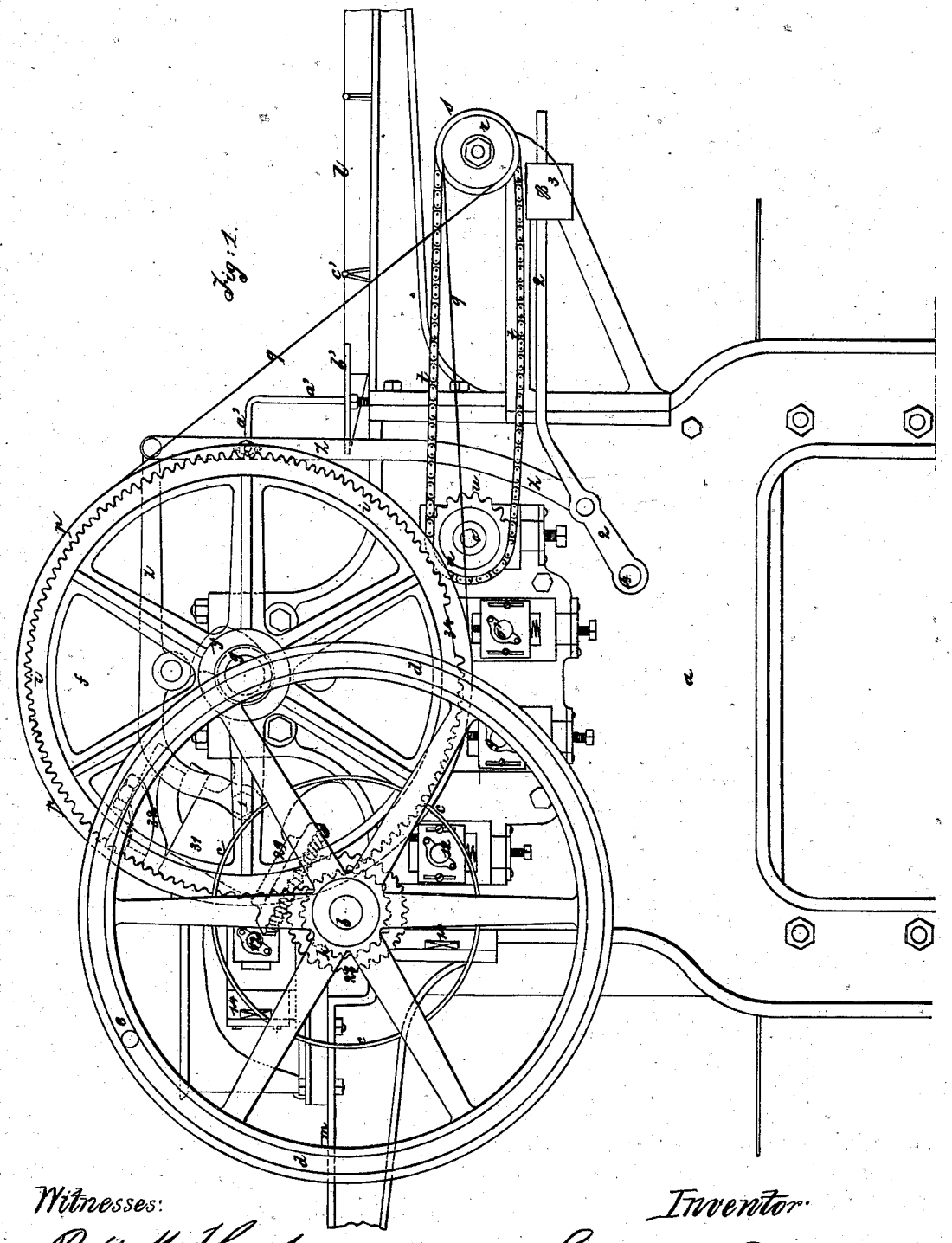

Witnesses:

Robt. H. Cupp

Jean Baptiste Rolland

Inventor.

Santerre Poirier

N. PETERS, PHOTO-LITHOGRAPHER, WASHINGTON, D. C.

5 Sheets—Sheet 2.

L. POIRIER.

BRONZING-MACHINES.

No. 194,261. Patented Aug. 14, 1877.

Fig. 2.

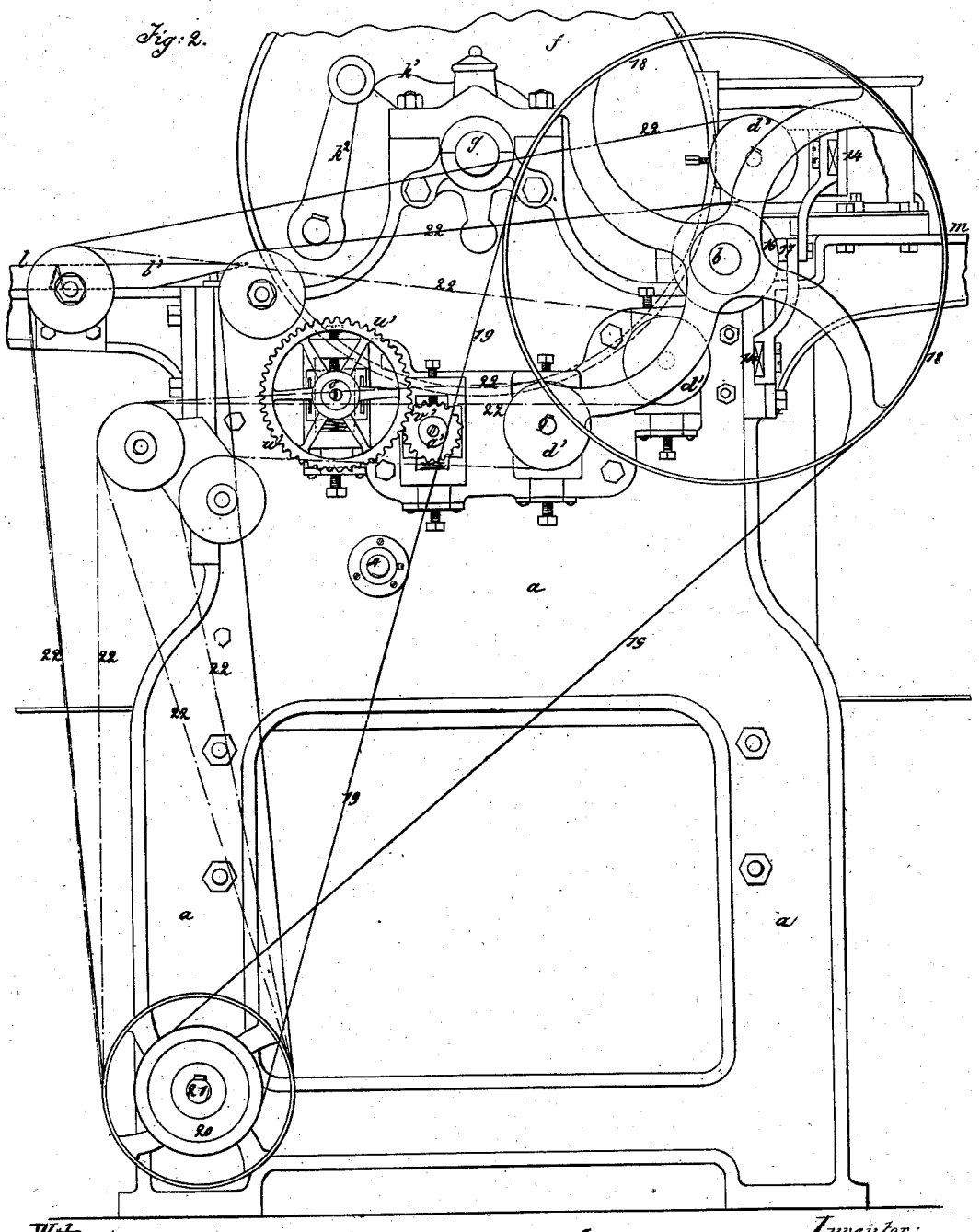

Witnesses:

1 Robt. McMurtrie

2 Jean Baptiste Rolland

Inventor:

Laurent Poirier

N. PETERS, PHOTO-LITHOGRAPHER, WASHINGTON, D. C.

5 Sheets—Sheet 3.

L. POIRIER.

BRONZING-MACHINES.

No. 194,261. Patented Aug. 14, 1877.

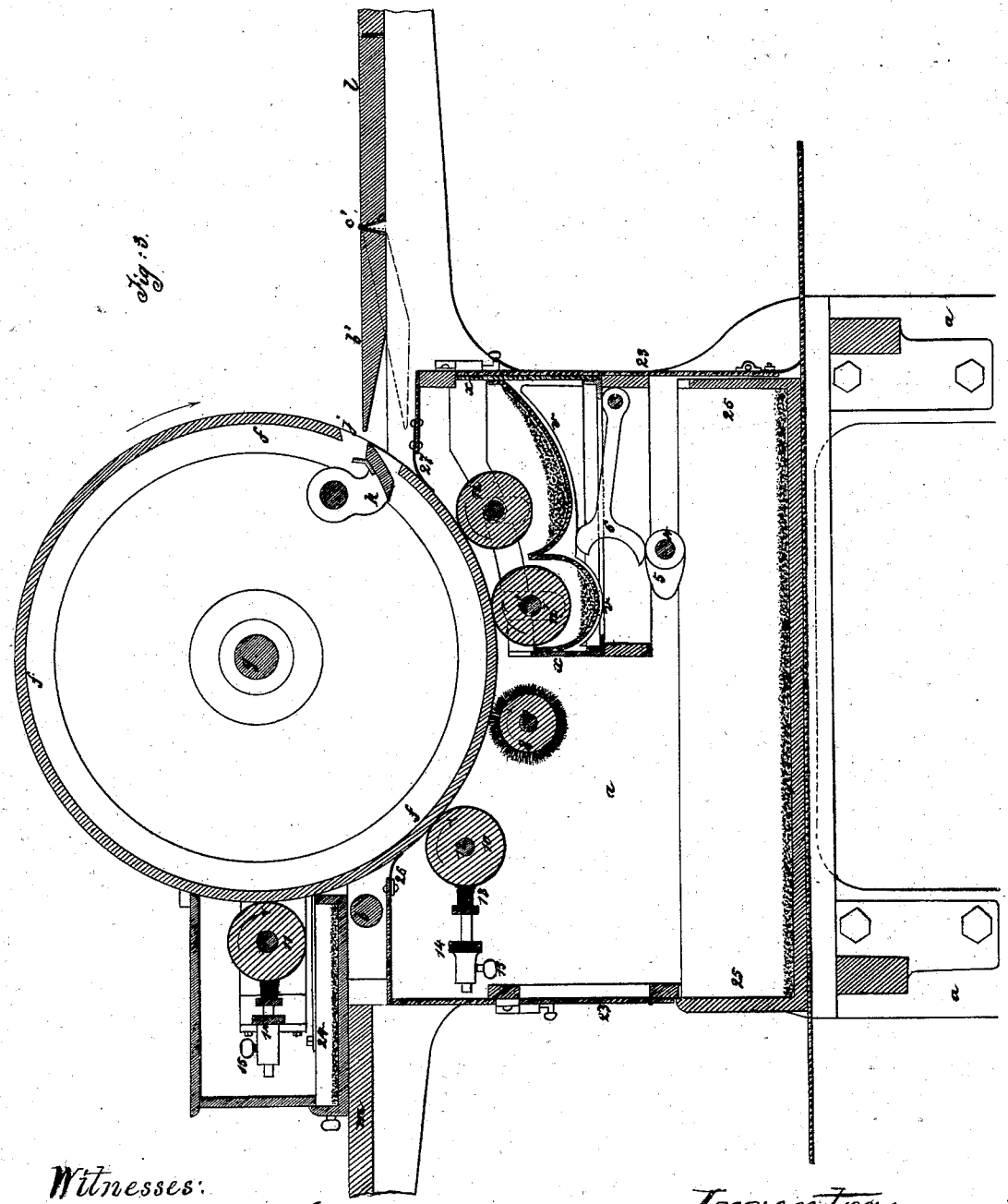

Witnesses:

Robt M. Harper

Jean Baptiste Rolland

Inventor:

Santerent. Poirier

N. PETERS, PHOTO-LITHOGRAPHER, WASHINGTON, D. C.

5 Sheets—Sheet 4.

L. POIRIER.

BRONZING-MACHINES.

No. 194,261. Patented Aug. 14, 1877.

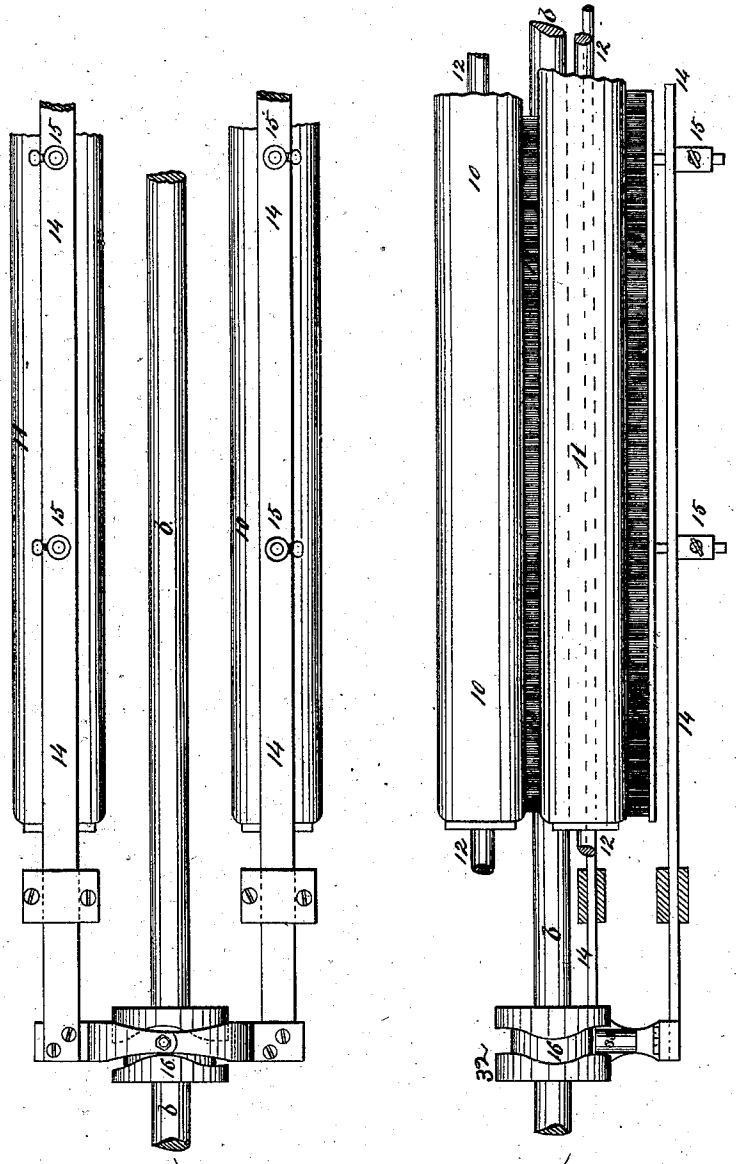

Fig. 4

WITNESSES:

Robt M. L. Cupu

Jean Baptiste Rolland

INVENTOR:

Santeent Poirier

BY

[illegible], F. C.

ATTORNEYS.

N. PETERS, PHOTO-LITHOGRAPHER, WASHINGTON, D. C.

5 Sheets—Sheet 5.

L. POIRIER.

BRONZING-MACHINES.

No. 194,261. Patented Aug. 14, 1877.

Fig: 6.

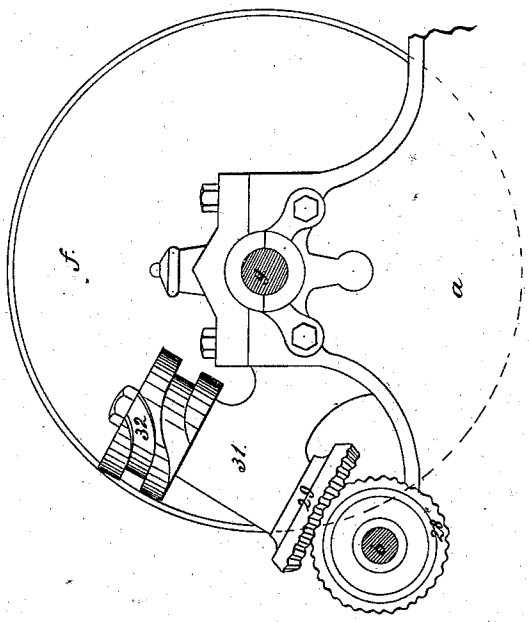

Fig: 5.

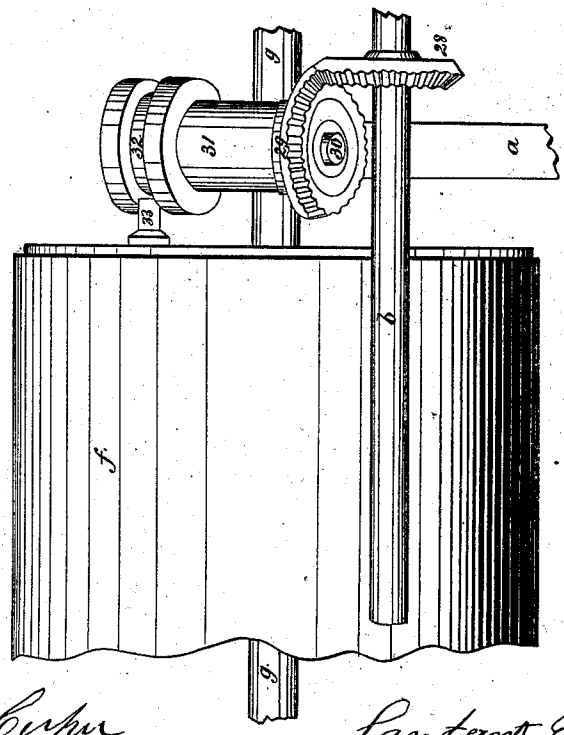

WITNESSES:

Robt M Harper

Jean Baptiste Rolland

INVENTOR:

Lantant Poirier

BY

[illegible]

ATTORNEYS.

N. PETERS, PHOTO-LITHOGRAPHER, WASHINGTON, D. C.

UNITED STATES PATENT OFFICE.

LAURENT POIRIER, OF PARIS, FRANCE.

IMPROVEMENT IN BRONZING-MACHINES.

Specification forming part of Letters Patent No. **194,261**, dated August 14, 1877; application filed February 14, 1877; patented in France, October 17, 1874, for fifteen years.

To all whom it may concern:

Be it known that I, LAURENT POIRIER, of Paris, France, engineer, have invented Improvements in the Construction of Bronzing Apparatus, or machines for applying any kind of colors, in a state of powder, to sheets of paper, cloth, &c.; and I do hereby declare that the following is a full, clear, and exact description of the same, reference being had to the annexed sheets of drawing, making a part of the same.

My invention relates to improvements in machines used for bronzing or applying any kind of colors, in a state of powder, to sheets of paper, sheets of metal, fabrics, &c.—that is to say, to apparatus for applying colors, in a state of powder, to any kind of sheets printed by any mode of inking, by means of mordant varnish, as, for instance, in lithography, copper-plate printing, typography, &c.

My improved machine is represented in accompanying drawings.

Figure 1 shows a side view of the machine. Fig. 2 represents a view of the other side of the same. Fig. 3 shows a central longitudinal vertical section of the same. Fig. 4 represents an elevation and a plan view, as well as partly the cleaning-glazing cylinders constructed according to my improvements; and Figs. 5 and 6 show a front view and a profile or outside line of the peculiar mechanism effectuating, automatically, the stoppage of the drum.

Throughout all these figures the same letters and numbers or ciphers refer to like parts.

a a are bearers forming the frame of the machine; *b*, driving-shaft of the same; *c*, driving-pulley; *d*, fly-wheel.

The driving-shaft may, if required, be actuated by hand by means of the handle or crank *e*, fixed on the fly-wheel *d*.

f is a drum or cylinder, carrying along the sheet to be powdered. This drum is mounted on the shaft *g*, pivoted on the supports forming part of the frame. This drum is driven by the main shaft *g* by means of a straight pinion, *h*, fixed on the shaft *b*, and gearing into the toothed wheel *i*, mounted on the shaft of the drum. *j* is a longitudinal notch formed on the drum, for the catching of the sheet by a tong or dog, *k*, attached internally to the said drum, and actuated at the required moment by a cam, k^1, by means of the lever k^2, or any other convenient mechanism.

l is a cable, serving for margining or laying the sheets.

m is the receiving-table.

n is the bronzing or powdering cylinder, covered with velvet, flannel, &c. It turns, by its shaft *o*, in bearings mounted on spiral springs and placed in the frame. Its rotary motion is imparted by means of a pulley, *p*, mounted on the shaft *g* of the drum, a strap, *q*, a pulley, *r*, a toothed wheel, *s*, an endless chain, *t*, and the toothed wheel *u*, mounted on the extremity of the shaft *o* of the powdering-cylinder.

On the other extremity of the shaft *o* is fixed a toothed wheel, *w'*, transmitting its movement to a pinion, *v'*, dependent on the shaft *o'*, on which is mounted the friction bronzing-cylinder *n'*, the movement of which is thrice as rapid as that of the bronzing-cylinder *n*. The friction-cylinder completes the bronzing, and gives the bronzed surface the polish and brilliancy.

v is the double trough containing the bronze or other powder. This trough may vertically rise or descend in a frame, *x*. The motion of this trough is obtained from a cam, *y*, fixed on the shaft *g*, and actuating an articulated elbow-lever, *z*, oscillating at 1. This lever actuates another lever, 2, provided with counterpoise 3, fixed to one end of a shaft, 4, which may turn on the frame, and consequently receives a rotary movement, or partly an intermittent and alternate rotary movement. It admits on its length two, three, or a greater number of cams or snugs, 5, raising or lowering corresponding levers 6, which lift or lower in their turn the trough *v* in the frame *x*, so as to cause the trough to feed the powdering-cylinders at the proper moment, as hereinabove specified.

a is a rod attached to the lever *z*. It passes through a notch provided in the board or small table *b'*, hinged at *c'* on the table *l*. This rod *a'* thus gives a downward movement to the said table *b'* when the sheet has been caught by the tong *k*.

The dotted lines in Fig. 3 show the lowered

position occupied by the small table or board in order to permit the sheet to be carried along without friction.

8 is a circular cleaning-brush, taking away from the sheet the overplus of the bronze. It is mounted on the shaft 9, which turns in the frame *a*.

10 11 are cleaning-glazing cylinders finishing the work—that is to say, giving it the last stroke. They are mounted on the shafts 12, which may turn in the frame *a*. These cleaners will always be provided with a rectilinear brush for cleaning continually.

13 represents longitudinal brushes placed behind the cylinders 10 11, and serving to clean them. For this purpose these brushes are fixed on bars 14, by means of two or more screws, 15, and these bars receive their continuous motion, to and fro, from a cam, 16, mounted on the driving-shaft, and into the groove of which passes a friction-roller, 17, fixed on an extremity of the arms of the said bars. By means of the screws 15 the brushes 13 may be approached to or removed from the cleaning-glazing cylinders 10 11, in order to regulate the friction of these brushes on the cylinders.

The rotary movements of the brush 8 and of the cleaning-glazing cylinders 10 11 are independent of one another. To this effect a pulley, 18, is provided on the main shaft, which pulley, by means of a transmission-strap, 19, imparts a rotary movement to another pulley, 20, fixed on the lower shaft 21, and on this shaft is mounted a drum, which, by means of straps 22, and of the pulleys *d'* fixed on one extremity of the shafts of the brush 8, and of the cleaning-glazing cylinders 10 11, gives to each of these organs a rotary movement.

23 represents a box or casing provided between the two bearers forming the frame *a*. This casing include the double trough, the cleaning-brush, and one of the cleaning-glazing cylinders.

24 is a drawer fitting into the casing 23, to gather the powder swept away by the cleaning-brush and by one of the cleaning-glazing cylinders.

25 is a small drawer, receiving the powder of the cleaning-glazing cylinder 11.

26 27 are strips of india-rubber, leather, or any other flexible matter, pressing on the drum *f*, leaving only the exactly necessary space for the passage of the sheet, and completing thus the hermetical shutting of the box or casing, in order to prevent the powder-dust from escaping.

The automatical stopping of the drum for giving the sheet the required space of time for being caught by the tong *k* is obtained by the following arrangement:

On the main shaft of the machine is mounted a conic pinion, 28, gearing into another conic pinion or worm, 29, fixed on the extremity of a shaft, 30, which turns in a socket, 31, fixed to the frame. On the other extremity of this shaft is fixed a cam, 32, Figs. 4 and 5, into which cam a button, 33, attached laterally to the drum, is to pass at a given moment, and on the driving toothed wheel of the drum is a space, 34, without teeth.

The whole being arranged in this manner, the stoppage and the starting are effectuated in the following manner: At the moment the notch of the drum passes in front of the layer or lifter-table—in other words, at the moment a sheet is to be taken by the tong—the toothed wheel *i* is mounted on the shaft of the drum, so that the untoothed space 34 has come in front of the pinion *h*. The rotary movement, therefore, is no more transmitted to the drum, and at this moment also the button 33 of the said drum has passed into the groove of the cam 32. Now, this cam being animated by a continual rotary movement, it maintains during a revolution the button 33, and causes it at the end of this revolution to slip out, thus causing in the same time the wheel *i* to gear again into the pinion *h*, in order that the drum may resume its rotary movement in the same direction. Consequently, during the time required for the cam 32 to accomplish a revolution, the sheet is introduced into the notch of the drum and caught by the clasp or tong.

For continuous stuffs and papers—as, for instance, paper-hangings—the tong *k* will be driven by hand, and on the rear of the machine will be placed a drum, serving to wind up the paper. This drum receives its movement by straps, gearing, &c.

I claim—

1. The combination, with the movable trough *v*, of the levers 6, cam-shaft 4 5, lever 3, counterpoise-lever 2, cam *y*, the bronzing-rollers mounted in said trough, and the cylinder or drum, as shown and described, for applying the bronze-powder to the sheet intermittently, as specified.

2. The combination of conic pinions 28 29, shaft 31, having cam 32, button 33, attached to the drum having a toothless space, 34, gear *i*, and pinion *h*, all as shown and described, for stopping the drum automatically, as set forth.

3. The lifter-table and drum lever *z*, arm *a*, and cam *y*, the parts being so arranged that the table is lowered when the sheet has been caught by the tong *k*, all combined as shown and described.

4. The combination, with the cylinders 10 11, of the longitudinally-reciprocating brushes 13 and grooved cam 16, as shown and described, for the purpose specified.

LAURENT POIRIER.

Witnesses:
ROBT. M. HOOPER,
JEAN BAPTISTE ROLLAND.