June 30, 1959 E. F. MAYER 2,892,709

ELECTROSTATIC PRINTING

Filed March 7, 1955

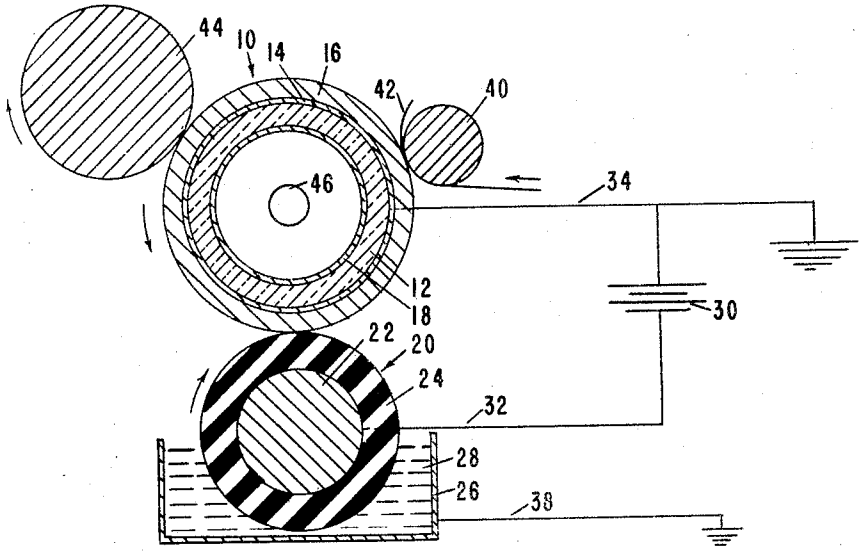

FIG. 1.

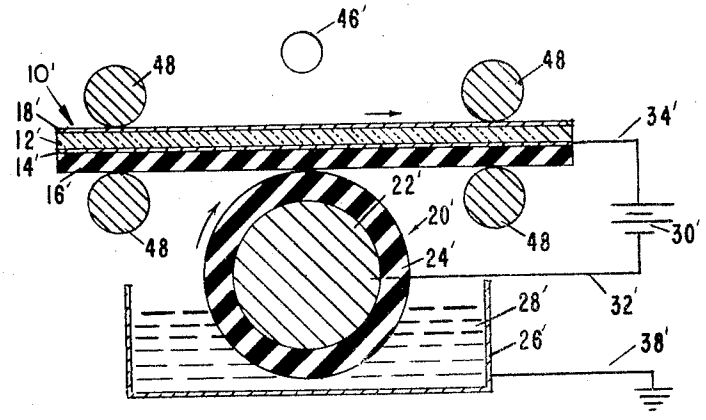

FIG. 2.

INVENTOR.
EDWARD F. MAYER
BY
LAWRENCE I. FIELD
ATTORNEY

United States Patent Office 2,892,709 Patented June 30, 1959

2,892,709

ELECTROSTATIC PRINTING

Edward F. Mayer, Cleveland, Ohio, assignor, by mesne assignments, to General Dynamics Corporation, San Diego, Calif., a corporation of Delaware

Application March 7, 1955, Serial No. 492,723

4 Claims. (Cl. 96—1)

This invention relates to electrostatic printing and relates to a novel electrostatic printing device as well as a novel method of utilizing such a device in the production of an ultimate visual reproduction of a latent electrostatic image.

There have been developed various electrophotographic devices in which a latent electrostatic image is formed corresponding to the visual image of an object which has been projected onto a photoconductive plate. The resulting electrostatic image is thereafter developed into a visual image by deposition of powder in a pattern conforming to the latent electrostatic image. Such prior art devices are described in U.S. Patents 2,221,776, 2,277,013 and 2,297,691 among others. Other devices for effecting a similar sequence of operations are described in two of my copending patent applications, namely, Serial No. 380,285, filed September 15, 1953, and Serial No. 484,215, filed January 26, 1955.

Each of the aforesaid devices provides a means for first producing a latent electrostatic image and subsequently developing the latent image into a visual reproduction in a subsequent operation. I have now discovered that the prior art processes may be greatly simplified if the formation of a latent electrostatic image and its development into a visual image are accomplished in a substantially simultaneous operation, whereby the apparatus may be simplified and the entire process may be better accomplished.

In my earlier filed patent application, Serial No. 380,285, there is described a method of producing a visual reproduction of a visual object comprising directing a light image of the object through a transparent layer of an electrically conductive material and thence through a contiguous layer of photoconductive material to an adjacent but separable layer of electrically insulating material backed by a supporting metal layer. An electric potential applied to the supporting metal layer establishes on the layer of insulating material an electrostatic reproduction of the light image. The surface of the insulating material bearing the electrostatic reproduction of the light image is thereafter separated from the previously adjoining photoconductive material and is then developed by application of a dispersion of powdered material to the charged surface.

In my later filed patent application, Serial No. 484,215, the method and apparatus of Serial No. 380,285 were modified in several respects. Thus, by altering the electrical characteristics of the charging means, it was discovered that the photoconductive surface could be charged by leakage through the charging means instead of through the photoconductive layer.

In both of my previous applications, separate means were provided for charging the photoconductive material and for developing a visual image thereon. In my present invention the same means is provided for applying both charge and developer to the photoconductive layer. As a result, the apparatus is greatly simplified.

One object of this invention is to provide a novel

method and apparatus for receiving and printing images by electrophotographic means at high speeds.

Another object of this invention is to provide an apparatus for high speed electrophotographic printing in which a minimum of moving parts are employed.

A further object of this invention is to provide an apparatus and method for receiving and printing images by electrophotographic means in which a latent electrostatic image is developed substantially simultaneously with its formation.

These and other objects will become readily apparent to those skilled in the art by reference to the following specification and drawings in which:

Figure 1 is a schematic view of a preferred embodiment of my novel apparatus, seen in section.

Figure 2 is a similar schematic view of an adaptation in which the photoconductive element is in the form of a flat plate.

The electrophotographic device shown in Figure 1 is representative of the invention. In this device, the photoconductive element is shown in the form of a rotating drum **10** made of transparent material **12** and coated with a transparent conducting layer **14** and with an outer layer of a transparent photoconductive material **16**.

The transparent support drum **12** may be in the form of a glass or plastic cylinder. The primary requirements of the material are that it have a moderate transparency and a fairly low resistance. For example, materials which have a transparency of 50% to white light and have a resistance of between 100 and 1000 ohms per square surface have been found to be suitable. These values are, of course, related to the intensity of the light source **46** and may obviously be increased or decreased as necessary.

The transparent conducting layer **14** is advantageously formed of evaporated gold with bismuth additions or tin oxide or any other suitable conductive material which may be deposited in the form of thin transparent films on cylinder **12**.

The photoconductive layer **16** ideally should be a perfect insulator in the dark. In practice, materials with a resistivity of the order of at least 10^{12} ohm centimeters have been found suitable. Furthermore, an ideal material for photoconductive layer **16** is one which becomes a good conductor on exposure to illumination. In actual practice, materials which have a resistivity of 10^{10} ohm cm. or less when exposed to light are satisfactory. A third significant property is the speed with which the resistance drop is obtained on exposure to illumination. Materials with a suitable combination of dark resistivity, light resistivity and speed are those materials which are transparent in the form of thin films and which are photoconductive. For example, selenium, arsenic selenide, zinc cadmium sulfide compositions and many other known materials which have the aforementioned properties are satisfactory. These photoconductive layers should be continuous and are advantageously deposited by vacuum deposition.

A second drum **20** is formed of a metal core **22** and a covering layer **24** which serves both as the means to apply a charge to the photoconductive layer **16** and as the means to apply an opaque powder to the layer **16** in order to develop an ultimate visual image thereon. The covering layer is selected from materials having a comparatively low resistance compared to the resistance of the photoconductive layer, so that as the two layers are in contact with a potential applied, charge may leak through from metal core **22** to the surface of the photoconductor at the desired rate. Both the electrical properties and the physical properties of the material chosen for layer **24** must be considered. For example, to avoid undue wear on the photoconductive layer, it is prefer-

able that a relatively soft resilient material be chosen for layer **24**. I have found that layer **24** should be formed so that the resistance from a point on the surface of core **22** to a point on the surface of layer **24** should lie within the range 10^3 ohms and 10^5 ohms and possibly lower, depending on the particular speed of operation selected. Conducting rubber and other semi-conducting organic materials have been found to be suitable.

The two drums **10** and **20** are positioned so as to rotate in opposite directions in contact with each other along one element of each cylinder. The contact may be increased somewhat due to the resiliency of the material forming layer **24** and contact areas up to ½ inch in width have been successfully employed in my process. In the center of drum **10** there is placed a light source **46** having illumination characteristics matched to the sensivity characteristics of the photoconductive material **16**. A negative **18** to be reproduced is placed in contact with the interior of drum **10** between the light source **46** and the photoconductive layer **16**. Stencils or silver halide films form suitable negatives. It will be evident that instead of a directly positioned negative, any suitable means may be provided for focussing an optical image upon the contact area between drums **10** and **20**. This optical image may be of the continuous tone type or simply a line negative.

As the two drums **10** and **20** rotate in opposite directions, the lines of contact progress around the surface of drum **10**. A potential source **30** connected by leads **32** and **34** to core **22** and conductive layer **14**, respectively, is applied between the metal core **22** and the photoconductive layer **16**. This permits charge from the potential source **30** to leak through to the surface of the photoconductor. In effect, as the rolls rotate, a small capacitor is formed continuously between the roller **20** and the conductive layer **14**. Charge leaking through the low resistance layer **24** tends to charge this capacitor to a value determined by the electrical characteristics of drums **10** and **20**, the speed at which the drums are rotating and the size of the aforementioned capacitance. The charge accepted by photoconductive layer **16** will be determined by the illumination falling on layer **16**, and accordingly, there will be built up on the photoconductive layer a charge configuration inversely proportional to the illumination of each corresponding area of the negative.

The latent electrostatic image formed on the photoconductive layer is developed into a visual image by means of drum **20**. Drum **20** is supported in suitable bearings (not shown) which insulate it from the remainder of the apparatus, so that it is suspended in a pan **26** containing a developer **28**. Pan **26** is connected to ground by a lead **38**.

In prior art electrophotographic devices, various opaque powders have been employed in the form of suspensions, to convert the latent electrostatic image, in the form of a charge pattern on the photoconductor into a visual image. As disclosed in my above-identified copending patent applications, I have found the use of a liquid dispersion of carbon black particularly advantageous.

Developer **28**, therefore, preferably comprises carbon black suspended in kerosene or in any suitable dielectric liquid such as other hydrocarbons or chlorinated hydrocarbons. Such compositions are more fully described in another of my copending applications Serial No. 486,806, filed February 8, 1955. Roller **20** applies the developer suspension to the photoconductive layer and as a result of the electrical relationship of the several component parts of my device, the carbon black precipitates on the photoconductive layer in proportion to the amount of charge present on the surface of the photoconductor, whereby a positive of the inversely impressed light image is produced on the surface.

Means are provided for removing the resulting carbon black image from the surface of drum **10**. Such means may comprise a transfer roller **40** carrying an endless web of paper as shown in Figure 1. Cleaning means **44**, such as a buffer of felt or other absorbent material is also provided for restoring the surface of drum **10** to a condition in which it may be reused.

In the modification shown in Figure 2, instead of being in the form of a drum, the photoconductive layer is in the form of a flat plate **10'**. The plate preferably consists of a transparent supporting layer **12'** of glass or plastic, on which there is a conductive layer **14'** of compositions similar to those employed in layer **14**, and a high resistance photoconductive layer **16'** similar to layer **16**. Disposed immediately above this plate-like element is a negative **18'** of the image to be reproduced. Above this and positioned so as to illuminate the photoconductive layer through the negative is a light source **46'**. Obviously, other suitable means may be provided for imaging the object to be reproduced on the photoconductive layer.

Below the image forming means there is positioned tank **26'** in which there is disposed roll **20'** adapted to charge the photoconductor and to develop the visual image. As the flat plate **10'** passes over drum **20**, a charge image is produced in the same manner as on drum **10**. Rollers **48**, electrically insulated from the remainder of the apparatus, may be used to insure that the photoconductive surface of plate **10'** intimately contacts the surface of drum **20'**.

By charging the photoconductor and developing the image in the manner disclosed, several advantages are realized. As compared with prior art devices, considerable simplification of the apparatus has been achieved. Furthermore, by developing substantially simultaneously with charging, any tendency of the photoconductor to leak charge or "decay" during the interval between the formation of a latent electrostatic image and its conversion to a visual image is virtually eliminated, with attendant increase in the sharpness of the image obtained.

The device shown in the figures has been satisfactorily operated with potentials in the range of 300 to 900 volts applied between the developing roller (made negative) and the conducting layer **14** (made positive) with satisfactory image formation at paper speeds in excess of 8 feet per minute.

I claim:

1. An electrophotographic device which includes: a light responsive component consisting of a transparent, electrically conductive material and an overlying layer of photoconductive insulating material disposed thereon; a cooperating cylindrical member consisting of an electrically conductive core portion and a surface layer of electrically semiconductive material around said core, formed so that the resistance from a point on the surface of said core to a point on the surface of said layer lies between about 10^3 ohms and 10^5 ohms, and disposed so that a line of physical contact exists between a portion of the photoconductive insulating layer and the surface of the electrically semiconductive material; means for directing a light image of an object to be photographed, toward the layer of photoconductive insulating material at the said line of contact; a source of electric potential; electrical connections between said source of potential and both the said transparent, electrically conductive material and the electrically conductive core, whereby said potential is impressed across said photoconductive insulating material and said layer of electrically semiconductive material, along their line of contact; a vessel adapted to contain a developer composition consisting essentially of a body of liquid wherein there are suspended solid particles of developer; means for rotatably supporting the cylindrical member in physical contact with at least a portion of said body of liquid and insulated from ground; whereby exposure, charging and the development of a visible image may be effected simultaneously at the line of contact between said transpar-

ent, electrically conductive material and said electrically semiconductive surface layer.

2. An electrophotographic device which includes: a light responsive component consisting of a transparent, electrically conductive material and an overlying layer of photoconductive insulating material disposed thereon; a cooperating cylindrical member consisting of an electrically conductive core portion and a surface layer of electrically conductive rubber around said core, disposed so that a line of physical contact exists between a portion of the photoconductive insulating layer and the surface of the electrically conductive rubber; means for directing a light image of an object to be photographed, toward the layer of photoconductive insulating material at the said line of contact; a source of electric potential; electrical connections between said source of potential and both the said transparent, electrically conductive material and the said electrically conductive core, whereby said potential is impressed across said photoconductive insulating material and said layer of electrically conductive rubber, along their line of contact; a vessel adapted to contain a developer composition consisting essentially of a body of liquid wherein there are suspended solid particles of developer; means for rotatably supporting the cylindrical member in physical contact with at least a portion of said body of liquid and insulated from ground; whereby exposure, charging and the development of a visible image may be effected simultaneously at the line of contact between said transparent, electrically conductive material and said electrically conductive rubber surface layer.

3. The method of producing a visual reproduction of an object on the surface of a light sensitive component consisting of a transparent, electrically conductive material and a photoconductive insulating material lying thereover which includes: establishing a line of intimate physical contact between successive portions of said photoconductive insulating material and successive portions of the surface of a cylindrical member consisting of an electrically conductive core covered with a layer of electrically semiconductive material, formed so that the resistance from a point on the surface of the core to a point on the surface of the layer of electrically semiconductive material lies within the range between about 10^3 and 10^5 ohms; while simultaneously performing the following at said line of contact: (1) illuminating the photoconductive insulating material at the line of contact by projecting a light image of an object toward at least that portion of the photoconductive insulating material; (2) impressing a potential across said photoconductive insulating material and said electrically semiconductive material, at said line of contact; and (3) developing a visible image at said line of contact by depositing solid developer particles from developer liquid carried to the line of contact by the surface of the electrically semiconductive material; whereby exposure, charging and development of a visible image are effected simultaneously at the said line of contact.

4. The method of producing a visual reproduction of an object on the surface of a light sensitive component consisting of a transparent, electrically conductive material and a photoconductive insulating material lying thereover which includes: establishing a line of intimate physical contact between successive portions of said photoconductive insulating material and successive portions of the surface of a cylindrical member consisting of an electrically conductive core covered with a layer of electrically conductive rubber while simultaneously performing the following at said line of contact: (1) illuminating the photoconductive insulating material at the line of contact by projecting a light image of an object toward at least that portion of the photoconductive insulating material; (2) impressing a potential across said photoconductive insulating material and said electrically conductive rubber, at said line of contact; and (3) developing a visible image at said line of contact by depositing solid developer particles from developer liquid carried to the line of contact by the surface of the electrically conductive rubber; whereby exposure, charging and development of a visible image are effected simultaneously at the said line of contact.

References Cited in the file of this patent

UNITED STATES PATENTS

2,357,809	Carlson	Sept. 12, 1944
2,558,900	Hooper	July 3, 1951
2,618,551	Walkup	Nov. 18, 1952
2,730,023	Greig	Jan. 10, 1956
2,752,833	Jacob	July 3, 1956
2,808,328	Jacob	Oct. 1, 1957
2,811,465	Greig	Oct. 29, 1957

OTHER REFERENCES

R.C.A. Review, December 1954, p. 480.