Aug. 24, 1948. R. R. SIMPSON 2,447,718

ROTARY SWITCH

Filed Oct. 25, 1946 2 Sheets-Sheet 1

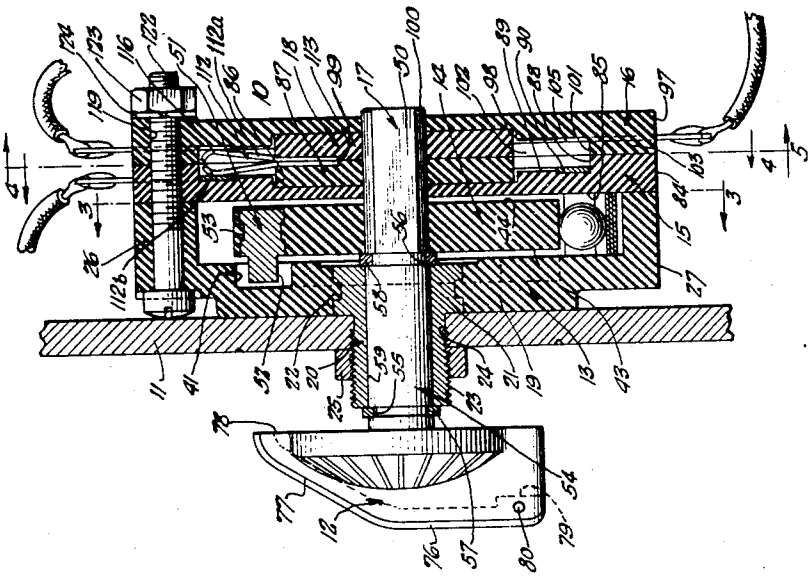

Fig. 2

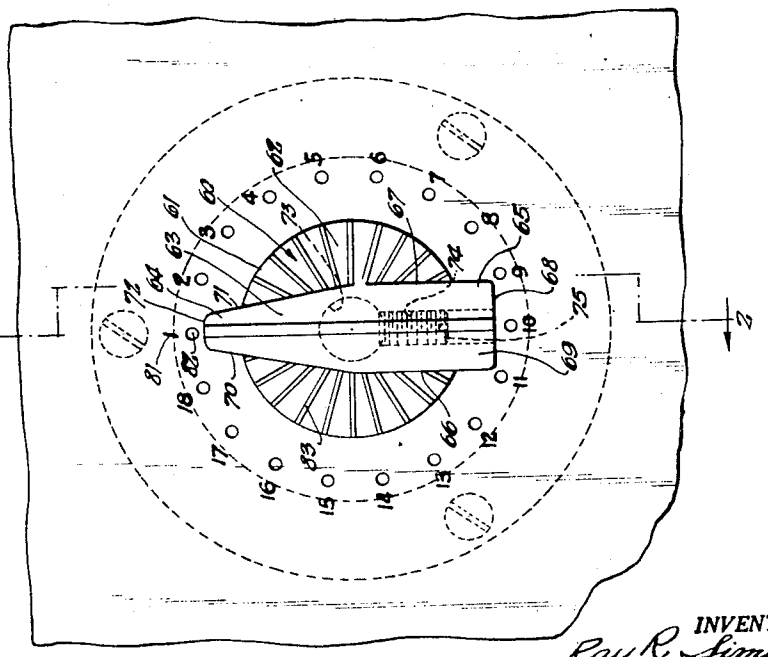

Fig. 1

INVENTOR.
Ray R. Simpson
BY
Robert H. Wendt
Atty.

Aug. 24, 1948. R. R. SIMPSON 2,447,718

ROTARY SWITCH

Filed Oct. 25, 1946 2 Sheets-Sheet 2

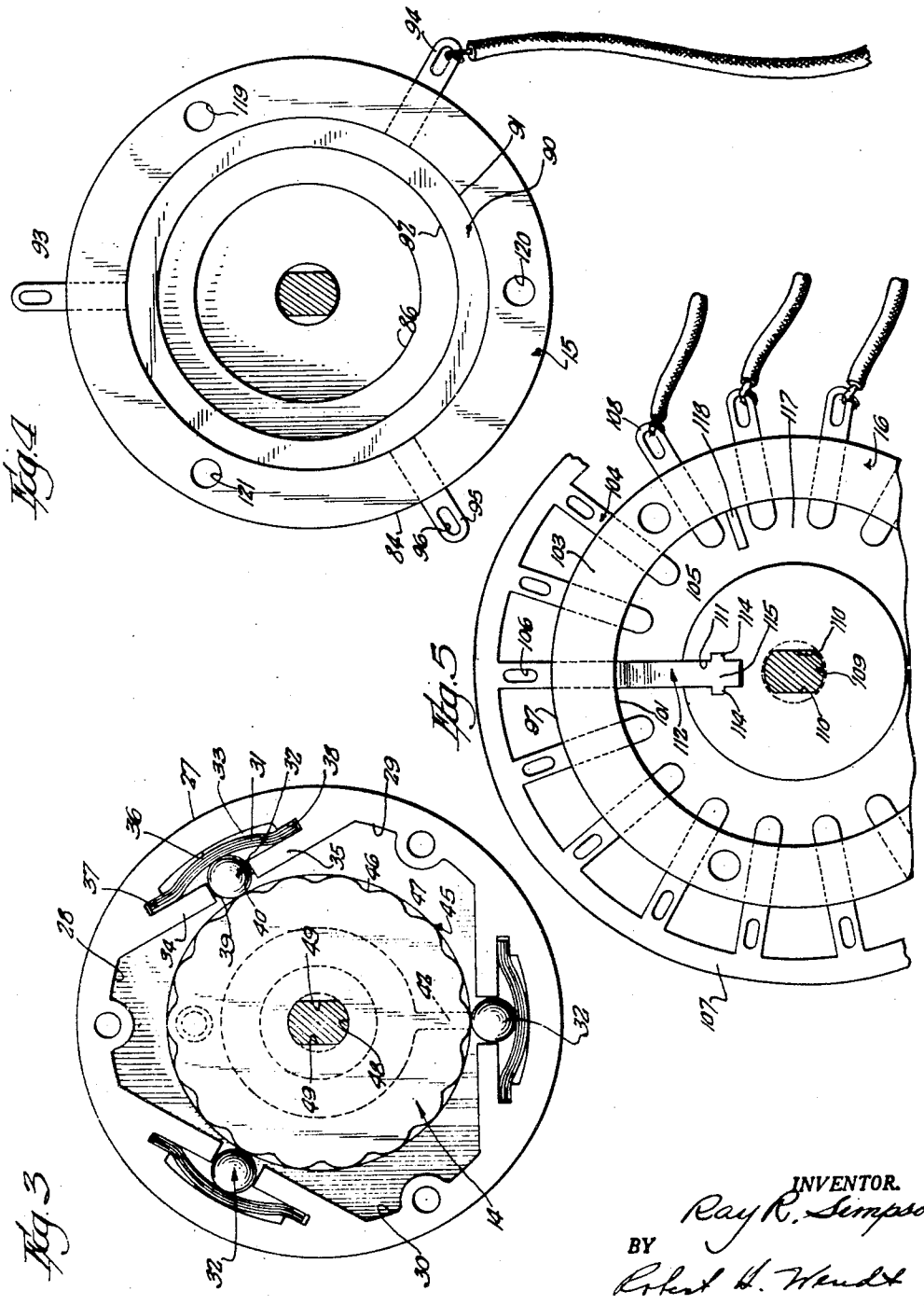

INVENTOR.
Ray R. Simpson
BY
Robert H. Wendt
Atty.

Patented Aug. 24, 1948 2,447,718

UNITED STATES PATENT OFFICE

2,447,718

ROTARY SWITCH

Ray R. Simpson, River Forest, Ill., assignor to Simpson Electric Company, Chicago, Ill., a corporation of Illinois

Application October 25, 1946, Serial No. 705,623

4 Claims. (Cl. 200—11)

1

The present invention relates to rotary switches, and is particularly concerned with switches of the type having multiple contacts and snap means for retaining the switch in any of its predetermined positions.

The multiple contact switches of the prior art of this type involve a considerable amount of labor, inasmuch as each of the contacts must be riveted or otherwise secured to a suitable base, such as a resin-impregnated insulating board, in the devices of the prior art. For example, such a switch constructed according to the methods of the prior art would involve the separate handling of eighteen contacts on one contact plate and from one to three, or more, on the other.

Furthermore, in the devices of the prior art it is difficult to secure the contacts in a relatively permanent way, as the rivets sometimes become loose, and one of the objects of the invention is the provision of an improved rotary switch of the multiple contact type in which all of the contacts may be simultaneously mounted and secured at the same time, so as to eliminate much of the labor and the time-consuming operations involved in making the devices of the prior art.

Another object of the invention is the provision of a multiple contact rotary switch in which the contacts are more firmly secured, and which may be constructed with any number of its contacts separated or tied together by an electrical connection, thus eliminating the necessity for effecting electrical connections at other points when contacts should be tied together.

Another object of the invention is the provision of an improved rotary switch structure which is adapted to keep the contacts constantly in a bright and shining good-contact condition, due to the wiping action which is involved in the moving contact passing over the fixed contacts, and due to the resilient character of the contact engagement.

Another object of the invention is the provision of an improved rotary switch structure which is simple, capable of economical manufacture, which has a minimum number of parts to be assembled, and which has a snap action so that contacts are quickly broken and quickly made.

Another object of the invention is the provision of an improved switch construction which is dust-proof, and the mechanism, such as the contacts and switch, is so enclosed that it permits the more satisfactory use of a lubricant whenever it is required, and also avoids the catching of dust by the lubricant.

2

Another object of the invention is the provision of an improved switch construction in which there is no possibility of loose parts becoming lodged in the switching mechanism or becoming damaged in the handling, processing, repairing, servicing, etc., and in which all of the contact-making parts are shielded by a suitable housing so that they are protected against damage.

Another object of the invention is the provision of an improved method of making electric switches and, in particular, of the handling of the multiple fixed contacts, which is equally adaptable to a construction in which the contacts are secured by being embedded in a molded part, or in which the contacts are riveted or otherwise secured to an insulating support.

Other objects and advantages of the invention will be apparent from the following description and the accompanying drawings, in which similar characters of reference indicate similar parts throughout the several views.

Referring to the drawings, of which there are two sheets,

Fig. 1 is a front elevational view of a rotary switch embodying the invention, mounted upon a panel.

Fig. 2 is a sectional view showing a fragment of the panel taken on the plane of the line 2—2 of Fig. 1, looking in the direction of the arrows.

Fig. 3 is a sectional view taken on the plane of the line 3—3 of Fig. 2, looking in the direction of the arrows, showing the snap mechanism and the structure of the housing.

Fig. 4 is a sectional view taken on the plane of the line 4—4 of Fig. 2, looking in the direction of the arrows.

Fig. 5 is a sectional view taken on the plane of the line 5—5 of Fig. 2, looking in the direction of the arrows, showing the multiple contact plate.

Referring to Figs. 1, 2 and 3, 10 indicates, in its entirety, a rotary switch embodying the invention, which is mounted upon a panel 11 and provided with an actuating knob 12. The present rotary switch preferably includes a base member 13, an indexer 14, a common contact plate 15, a multiple contact plate 16, and an operating shaft 17 which carries a movable contact rotor 18.

The housing or base member 13 may consist of a molded insulating member of substantially cylindrical form, which has its end wall 19 provided with a metal bushing 20 adapted to serve as a bearing for the shaft 17. Bushing 20 is formed with a radially extending flange 21 having a peripheral groove 22 by means of which this

bushing is securely anchored when molded or embedded in the end wall 19 of the base 13.

The bushing 20 is centrally located with respect to the base 13, and has a threaded tubular extension 23 adapted to pass through the aperture 24 in the panel and adapted to receive a nut 25 by means of which the base is secured to the panel. Nut 25, threaded on the threaded portion 23, clamps the base against the panel.

The base 13 has a side wall 26, the outer surface 27 of which is cylindrical. The inner surface of the side wall 26 is also cylindrical at the points 28, 29 and 30, but is formed with enlargements between these points for housing the springs 31 and the steel balls 32 which serve as a snap mechanism and also for retaining the switch in any of its predetermined positions. The enlargements of the side wall 26 are formed with the elongated recesses 33 which are bounded by the side wall on the outside and by oppositely extending flanges 34 and 35 on the inside.

Inside the recesses the inner side of the wall, indicated at 36, is again cylindrical, providing space for the outwardly bowed springs 31. The ends of the springs 31 are preferably received in rectangular sockets 37, 38 which are substantially as deep as the width of the springs.

The sockets 37 and 38 are located to engage the ends of the springs when the springs are suitably bowed, but there is sufficient clearance at the ends of the springs to permit the springs to straighten out slightly when the balls 32 move into the grooves or recesses on the indexer. The opposed retaining flanges 34, 35 serve as guides for the ball 32, and may have plane end surfaces 39, 40 spaced from each other sufficiently to receive the ball 32.

The springs 31 may comprise a plurality, such as, for example, four, or more, or less, of leaf springs, which are initially deformed to substantially the shape shown in Fig. 3, but have to be bowed still farther to insert the balls 32 and place them under predetermined radial pressure. The springs 31 may be made of any suitable material, such as clock spring steel or Phosphor bronze, or the like.

In order to balance the pressure which is placed upon the shaft and its rotating parts by the springs 31, three such spring and ball assemblies are preferably provided and located at three equally spaced points about the periphery of the base 13. The base 13 is also preferably provided with an arcuate slot 41 which may be rectangular in shape and substantially annular, except that the slot is closed by a wall 42 at one side of the housing 13, the wall serving as a stop which is to prevent further rotation of the rotary switch beyond its initial position.

The indexer 14 may consist of a molded insulating member which is substantially cylindrical in form, having a pair of plane sides 43 and 44, but its periphery 45 is formed with a plurality of grooves 46 and partially cylindrical projections 47 somewhat in the nature of scallops. The grooves 46 serve as indexing positions into which the balls 32 simultaneously move when the rotary switch has its movable contact engaging a fixed contact.

The partially cylindrical projections 47 between the grooves 46 serve as camming shoulders to cam the balls 32 outward when the switch is turned, and also to permit the balls to cam the switch onward in its rotary action due to the tendency of all of the balls to move into the next groove.

The top of each hump 47 on the indexer 14 provides an unstable position for the balls 32 from which the indexer tends to move into the next switch position. At its center the indexer 14 is formed with an aperture 48 which may be substantially cylindrical, but has flattened sides 49 corresponding to the shape of the end portion 50 of the shaft with which the indexer is intended to turn.

The number of grooves and ridges on the indexer 14 may each correspond to the number of switch positions, and the size of these grooves and ridges is such that all of the balls 32 move simultaneously into grooves as the indexer is turned.

The actuating knob 12, base 13, indexer 14, common contact plate 15, and multiple contact plate 16 may all be formed out of a phenolic condensation compound, which is molded by the application of heat and pressure, or they may be formed out of any initially plastic and moldable insulating resin.

The indexer 14 also supports a stop member 51 which may consist of a substantially cylindrical metal body having a reduced cylindrical portion 52 projecting axially from the indexer 14 in a position to move in the slot 41 which is concentric with respect to the axis of the shaft 17. The body of the stop member 51 preferably has a peripherally extending groove 53 which serves to anchor this stop member in the mold.

When the switch is in its initial position, such as position No. 1, the stop member 51 engages one side of the wall 42. When it reaches its final position 18 the stop member engages the other side of the wall 42 in the slot 41.

The shaft 50 may consist of a substantially cylindrical metal rod made of any suitable material, such as steel, cadmium plated, having a cylindrical bearing portion 54 and the flattened portion 50.

At each end of the cylindrical bearing portion there is a groove 55, 56 which may be of rectangular cross-section for receiving a split spring ring 57, 58 which may fit in the groove, and may have a projecting rectangular portion adapted to serve as a thrust surface. Thus the split rings 57, 58 are adapted to engage the ends of the bushing 20 and to prevent axial movement of the shaft 17.

The inner cylindrical surface 59 of the bushing serves as a bearing for the cylindrical portion 54 of shaft 17. The shaft is preferably provided with an actuating member, such as the knob 12, which may also be made of molded insulating material. Knob 12 may have a substantially circular body 60 with a cylindrical outer edge 61 and a frusto-conical top surface 62.

The body 60 supports an integral pointer member 63, also serving as a handle, and consisting of a relatively thick flange which projects axially from the body 60 and also extends radially beyond the edge 61 at the pointer end 64 and at the handle end 65. The handle end of the knob 12 may have the opposed plane sides 66 and 67 which are parallel to each other, and which terminate in a plane end surface 68. This portion of the flange 63 may be grasped by the fingers, and its top surface 69 may also be plane.

The pointer end 64 of this body may have the two side surfaces 70 and 71 taper toward each other and toward a blunt point 72.

The body 60 is formed with an axial cylindrical bore 73 for receiving the end of the shaft 17, and this bore 73 may extend up into the flange 63 where it communicates with a threaded bore 74

extending inwardly from the end surface 68. A set screw 75 in the threaded bore 74 is adapted to engage the shaft 17 and secure the knob 12 on the shaft.

In order to provide a still more accurate and definite indicia on the pointer, the pointer is preferably provided with an embedded strip of metal 76. When the knob 12 is molded of black material, the metal strip 76, for example, may be made of a silvery color, such as a steel or aluminum strip.

The strip 76 is preferably quite narrow, as it acts as the sharpest part of the pointer, and it extends across the wide rear portion of the flange 63 and down a sloping surface 77 of the pointer end 64 and terminates at the bottom 78 of the knob 12. Such a strip may be of substantially uniform width, except that it is preferably provided with two or more enlargements 79 which may be apertured so that the molded material will flow through the apertures 80 to anchor the strip in place.

The strip 76 preferably projects outwardly from the knob 12 by a uniform amount, and it thus serves as an accurate indicium to be lined up with the switch indicating positions which are indicated on the dial by the numerals 81, and the dots or small circles 82.

The conical portion 62 of the knob body 61 may also have a plurality of radially extending ribs 83 serving, in some cases, as additional indicia.

The common contact plate 15 also comprises a molded insulating member which is circular in shape, its outer edge 84 being cylindrical and of the same size as the outer edge 27 of the base 13. This common contact plate is illustrated best in Figs. 2 and 4. It has a plane surface 85 on the side toward the indexer 14, and on its other side it is formed with a shallow cylindrical recess 86 adapted to receive one of the halves 87 of the rotor 18.

The common contact plate 15 is also formed with a larger concentric shallow cylindrical recess 88 which has an annular surface 89 surrounding the recess 86. Seated in the annular recess 89 there is a contact ring 90 comprising an annular metal member of suitable material, such as copper, having a circular outer edge 91 (Fig. 4) and a circular inner edge 92.

The contact ring 90 may carry one or more radially extending contacts 93, 94, 95, which form an integral part of the ring 90. These contacts 93—95 comprise radially extending strips of the same metal, which are long enough to project beyond the edge wall 84 of the common contact plate 15, leaving an outwardly projecting portion which may have an oval aperture 96 for each contact.

In many cases it will only be necessary that this common contact have only one terminal 93, 94 or 95, and the other terminals may be cut off, but in other cases connections may be made simultaneously to three circuits utilizing all of the contacts 93—95.

The ring 90, with its contacts 93—95, may be secured to the common contact plate 15 by being molded in this body so that the contacts 93—95 pass through the side wall of the recess 88. The three contacts thus assure the anchoring of the ring 90.

The multiple contact plate 16 may also consist of a molded member which is substantially circular, and which has a cylindrical outer edge 97 flush with the edges 27 and 84 of the parts 13 and 15.

Like the plate 15, the plate 16 is formed with a relatively small and shallow cylindrical recess 98

for receiving the other half 99 of the rotor 18. The purpose of the shallow cylindrical recesses 88, 98 is to act as bearings for rotatably supporting the rotor disk 18. It is also formed with a cylindrical bore 100 at its center for passing the shaft 17 and permitting its rotation in this bore.

Multiple terminal plate 16 is also provided with a larger cylindrical recess 101 surrounding the shallow recess 98 and forming a movable contact chamber 102.

The multiple contact plate 16 is shown in Fig. 5, and an annular wall 103, which surrounds the larger annular recess 101, has embedded in it a multiplicity of radially extending, equally spaced contacts 104. These contacts have rounded inwardly extending end portions 105 located in the chamber 102 and projecting from the wall 101 of the recess.

The radially extending spaced contacts 104 are all an integral part and supported by an annular member 107, only part of which is shown in Fig. 5, and this enables the operator to pick up all the contacts at once and to hold them in proper position to be embedded in a molded part, or to be riveted, or otherwise secured to an insulating support. In the latter case, the rivets would have to be applied to each part, which might be done by a riveting machine having multiple tools, but the operator need not handle every contact separately.

The radial contacts 104 also extend outwardly from the outer wall 97, and are preferably provided with the punched oval apertures 106, by means of which conductors are secured and soldered to these terminals. At the time these contacts 104 are embedded in the plate 16 they are all joined by a closed ring, a part of which is shown at 107 in Fig. 5, and thus the contacts 104 for the multiple contact plate 16 are all held in their proper position by the ring 107. They may all be placed in the mold simultaneously, and they will be automatically located as desired.

After the part 16 has been completed and it is known just how the contacts are to be used, the member 16 may be placed in a die, and the ring 107 may be sheared off, leaving the rounded end portions 108 on all of the contacts 104, and leaving the contacts all separated.

In other cases, where a simultaneous connection is to be made by several contacts, a portion, or portions, of the ring 107 may be left on the outer ends of the contacts 104. Thus two or three, or more, of these contacts may be joined together, or the contacts may all be separated by shearing off the ring entirely.

The rotor 18 may consist of a pair of similar members 87 and 99, oppositely disposed, and located side by side to form a disk-like rotor. Each of these members 87 and 99 comprises a disk of molded insulating material which is formed with a generally cylindrical central aperture 109, but which also has the flat sides 110 corresponding to the shape of the flattened end portion 50 of the shaft 17.

The size of the two disks 87 and 99, in so far as diameter is concerned, is such that they are adapted to rotate within the shallow recesses 86 and 98. The thickness of these two disks 87 and 99 is such that when they flatly engage each other they fit within the space provided for them between the plates 15 and 16.

Each of these disks 87 and 99 is formed with a groove 111 which is deep enough to house one-half of the movable contact 112 (Fig. 2). The movable contact 112 may be formed out of resilient metal, such as a Phosphor bronze or a re-

silient brass, and it consists of two legs which are bent back upon each other at the U-bend 113.

Each of these legs may consist of a strip of metal of uniform width and thickness, except that each has a laterally projecting anchoring formation 114, and these anchoring formations are preferably on both edges, thus giving the anchor part of the contact 112 a cruciform shape.

The groove 111 is of complementary cruciform shape, so that one-half of the contact 112 fits into each of the disks 87 and 99. When the disks 87 and 99 are held in engagement with each other, as shown in Fig. 2, the cruciform end portion 115 is firmly anchored between these two disks.

In addition to the anchoring portion 115 of the contact 112, the two legs of this contact project outwardly from the rotor 18 and are spread apart from each other in the shape of an acute V, as shown in Fig. 2, so that they come into engagement with the contact ring 99 and also with the inner ends 105 of the multiple contacts 104.

The ends of the legs of the contact 112 form contact fingers 112a and 112b and are preferably curved toward each other at a point 116, which may be midway between the edges of the ring 99 so that the extreme ends of these legs project toward each other. The spread of the legs of contact 112 is slightly greater than the distance between the contact 99 and the contact terminals 105, and this movable contact 112 resiliently engages the common contact and any one of the multiple contacts 104.

Between each of the fixed contact portions 105 the annular surface 117 (Fig. 5) of the plate 16 is preferably provided with a substantially rectangular recess or depression 118. These depressions prevent short-circuit from contact 105 to another contact 105 after a long period of use, when metal particles might be carried by the moving contact 112 across the surface 117 in sufficient amount to metalize the surface. When, and if, that occurs, the contacts 105 will, nevertheless, be separated by a definite break at the slots 118.

The housing 13, common contact plate 15, and multiple contact plate 16 are all preferably provided with a multiplicity, such as, for example, three, of registering apertures 119—121, located in the outer walls of these members and regularly spaced from each other for receiving the screw bolts 122 which are provided with nuts 123. A spring washer 124 is preferably included in the assembly, and any number of common contact plates 15 and multiple contact plates 16 may be mounted together with a plurality of the bolts 122.

It is an important feature of the invention that the fixed and movable contacts are all enclosed in the chamber 102, which is practically dust-proof, and in which they are housed to protect them against damage in handling, shipping, using, assembling, etc. In addition to this, the chamber 102 permits the more satisfactory use of a lubricant on the contacts and avoids the tendency of the lubricant to catch dust, as in the case where open contacts are employed.

Although in Fig. 2 I show only one multiple contact plate 16, two or three, or any number, may be added in a stack and actuated by a common shaft which, of course, should be of an appropriate length. Thus a great many rotary switches may be actuated by a common shaft.

The operation of the present rotary switch will be apparent from the description of its parts.

The shaft 17 is adapted to turn the rotor 18 to move the movable contact 112 from a position in which it engages one contact portion 105 until it engages the next contact portion 105. At this time, one side of the contact 112 is constantly in engagement with the common contact ring 99.

The same shaft 17 supports the indexer 14, the rounded portions 67 of which cam the spring-pressed balls 32 outward until all the balls simultaneously drop into the next groove, which is the next switching position.

The action of the springs and balls provides a snap action as well as a definite position in which the switch is held. Since three spring-pressed balls are provided, there is no side thrust on the shaft, and the springs exert a balanced action on the indexer and shaft.

My method of making terminal plates or other switch members may briefly be summarized as follows: The multiple contacts which are to be used in such a switch member are formed by a punching operation out of a common sheet of metal, with all of the contacts extending inwardly from an integral metal ring which supports them.

The contacts and this ring are placed in a mold which is then filled with a molding material, such as a phenolic condensation compound, in which the contacts are embedded, the supporting ring being located in another enclosed part of the mold, or projecting outwardly from the mold. Heat and pressure are then applied until the molding material has become solidified. The mold is removed, and then all, or such portions of the supporting metal ring for the contacts as are desired, may be removed by a punching operation.

At the same time, the external ends of the terminals may be suitably formed with a rounded end and/or a punched aperture. Thus all of the multiplicity of contacts may be simultaneously put in place in one operation. The handling of these small members is eliminated and the tedious labor of assembling such a switch is greatly reduced.

It will thus be observed that I have invented an improved rotary switch and an improved method of manufacturing the same. Instead of the tedious labor which is involved in the devices of the prior art in the placing of each separate contact terminal, and the riveting or other securement of each terminal to a post, all of the multiplicity of contact terminals may be simultaneously in place by molding them in the terminal plate, after which the supporting ring which held them in place may be completely removed by a punching operation, or parts of it may be removed to leave the contacts all separated, or leave some of them tied together.

In case the contacts are to be riveted to an insulating support instead of being embedded in a molded part, the present method still has very important advantages. The operator can pick up and place all of the fixed contacts in one operation, and they are simultaneously held in place to be secured by rivets or eyelets, or other suitable fastening means. The operator need not pick up each of these contacts separately, and thus a great deal of time and labor is saved.

The present switch is adapted to maintain the position of its fixed contacts throughout its full life without any possibility of becoming loose, as in the case of riveted terminal contacts. The job of assembly of such a switch involves a mini-

mum amount of labor, and may be accomplished by unskilled labor.

Therefore, the switch may be produced at a very low cost, and it may be sold at a price which is within the reach of a vast number of users.

Machine operations in the manufacture of this switch are reduced to an absolute minimum, and the contacts can be manufactured by punching and stamping operations. The only machining which is required is that involved in the formation of the shaft, its bushing, and the stop member for the indexer.

While I have illustrated a preferred embodiment of my invention, many modifications may be made without departing from the spirit of the invention, and I do not wish to be limited to the precise details of construction set forth, but desire to avail myself of all changes within the scope of the appended claims.

Having thus described my invention, what I claim as new and desire to secure by Letters Patent of the United States, is:

1. An electric switch member comprising a molded insulating cup-shaped body, a plurality of sheet metal contact members formed of an integral piece of metal projecting radially inwardly through said body and exposed inside said body, a plurality of said contact members being separated from each other at their outer projecting ends which serve as connectors, and others of said contact members being maintained connected by an annular sheet metal body member, a second molded insulating cup-shaped member having imbedded therein a sheet metal annular contact member provided with radially outwardly extending contact tongues, each of said cup-shaped members having a small shallow cylindrical recess centrally located in its cup and provided with a central bore, a rotor comprising a pair of insulating disks located in said smaller recesses and engaging each other, a movable wiping contact finger having an anchoring formation and a finger for engaging the first-mentioned inwardly projecting contacts of the first insulating cup member, and a second finger for engaging the annular contacts of the second-mentioned insulating member, said movable contact member having its anchoring formations confined in a complementary recess between said disks, and means for securing said cup-shaped members together and simultaneously holding said disks together and securing said movable contact to said disks in the recess formed by said two cup-shaped members.

2. An electric switch comprising an insulating cup-shaped body, a plurality of sheet metal contact members formed of an integral piece of metal projecting radially inwardly through said body and exposed inside said body, said contact members being initially connected by an annular sheet metal supporting member which may be maintained as a connection for said contact members or severed from the contacts to render other contact members independent of the others, a second insulating cup-shaped member having located therein a sheet metal annular contact member provided with an outwardly extending radial contact tongue, each of said cup-shaped members having a small shallow cylindrical recess centrally located in its cup and provided with a central bore, a rotor comprising an insulating disc located in said smaller recesses, a movable wiping contact finger having a supporting flange and a finger for engaging the first-mentioned inwardly projecting contacts of the first insulating cup member, and a second finger for engaging the annular contact of the second-mentioned insulating member, said movable contact member being secured to said disc to be rotated thereby, and means for securing said cup-shaped members together and for confining said rotor in the recesses formed in said two cup-shaped members.

3. An electric switch comprising an insulating cup-shaped body, a plurality of sheet metal contact members formed of an integral piece of metal projecting radially inwardly through said body and exposed inside said body, said contact members being initially connected by an annular sheet metal supporting member which may be maintained as a connection for said contact members or severed from the contacts to render other contact members independent of the others, a second insulating cup-shaped member having located therein a sheet metal annular contact member provided with an outwardly extending radial contact tongue, each of said cup-shaped members having a small shallow cylindrical recess centrally located in its cup and provided with a central bore, a rotor comprising an insulating disc located in said smaller recesses, a movable wiping contact finger having a supporting flange and a finger for engaging the first-mentioned inwardly projecting contacts of the first insulating cup member, and a second finger for engaging the annular contact of the second-mentioned insulating member, said movable contact member being secured to said disc to be rotated thereby, means for securing said cup-shaped members together and for confining said rotor in the recesses formed in said two cup-shaped members, and an actuating shaft passing through said central bore and through said rotor and having a pointer handle for rotating said shaft and rotor to actuate said switch.

4. An electric switch comprising an insulating cup-shaped body, a plurality of sheet metal contact members formed of an integral piece of metal projecting radially inwardly through said body and exposed inside said body, said contact members being initially connected by an annular sheet metal supporting member which may be maintained as a connection for said contact members or severed from the contacts to render other contact members independent of the others, a second insulating cup-shaped member having located therein a sheet metal annular contact member provided with an outwardly extending radial contact tongue, each of said cup-shaped members having a small shallow cylindrical recess centrally located in its cup and provided with a central bore, a rotor comprising an insulating disc located in said smaller recesses, a movable wiping contact finger having a supporting flange and a finger for engaging the first-mentioned inwardly projecting contacts of the first insulating cup member, and a second finger for engaging the annular contact of the second-mentioned insulating member, said movable contact member being secured to said disc to be rotated thereby, means for securing said cup-shaped members together and for confining said rotor in the recesses formed in said two cup-shaped members, an actuating shaft passing through said central bore and through said rotor and having a pointer handle for rotating said shaft and rotor to actuate said switch, and an indexer for said switch, comprising a support to

be secured to said switch member, a notched disc rotated by said shaft, and a plurality of spring pressed balls engaging in the notches of said disc.

RAY R. SIMPSON.

REFERENCES CITED

The following references are of record in the file of this patent:

UNITED STATES PATENTS

Number	Name	Date
1,463,453	Werner	July 31, 1923
2,399,906	Bentley	May 7, 1946
2,419,469	Spiro	Apr. 22, 1947

FOREIGN PATENTS

Number	Country	Date
431,280	Great Britain	July 4, 1935