No. 729,134. PATENTED MAY 26, 1903.

P. L. CLARK.

SWITCH CONTROL MECHANISM.

APPLICATION FILED SEPT. 11, 1902.

NO MODEL.

Fig. 1.

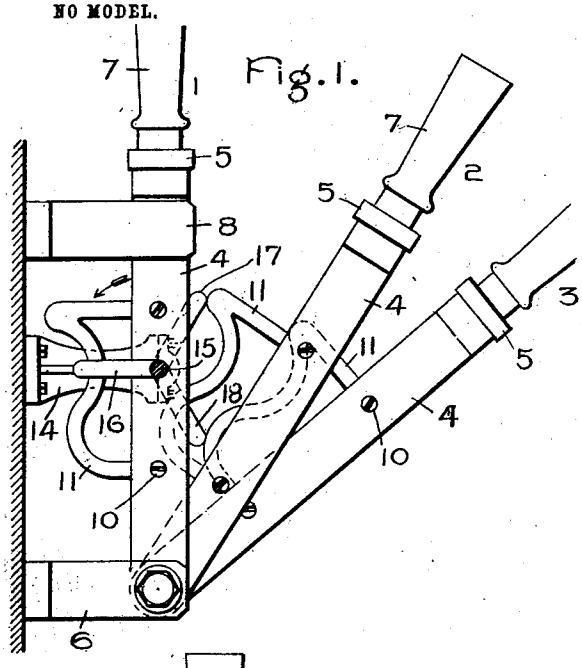

Fig. 2.

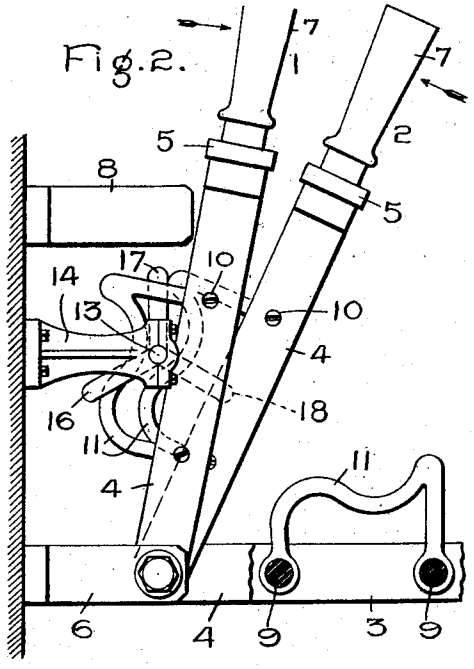

Fig. 3.

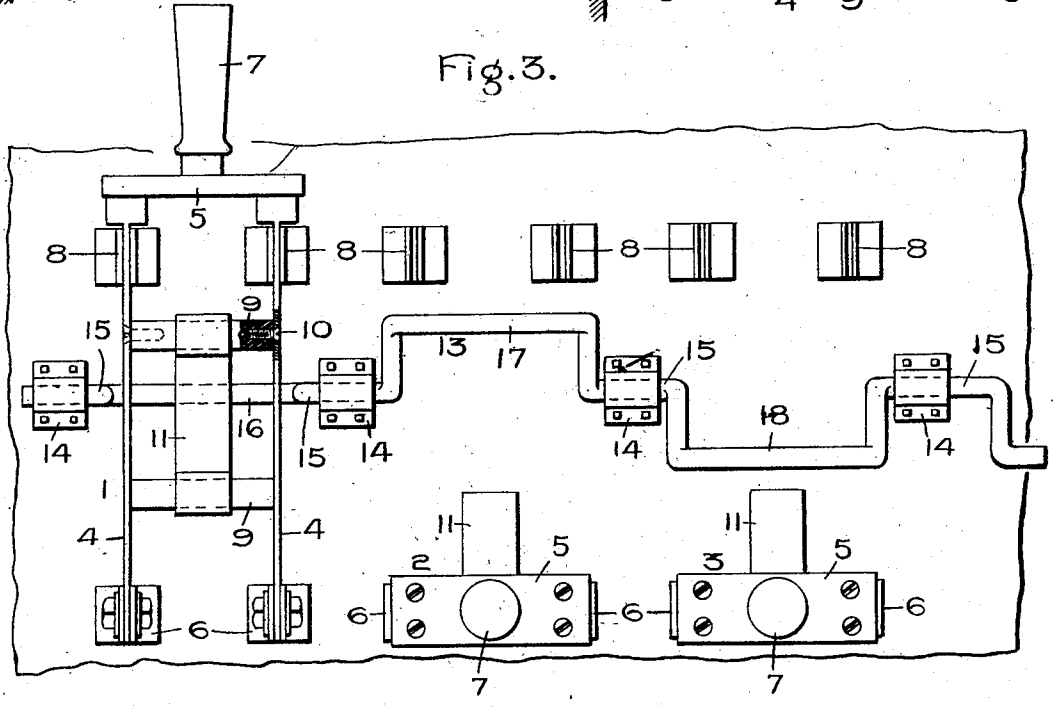

Witnesses:
Marcus L. Byng.
Benjamin B. Hull

Inventor:
Paul L. Clark,
by Albert G. Davis
Atty.

THE NORRIS PETERS CO., PHOTO-LITHO., WASHINGTON, D. C.

No. 729,134. Patented May 26, 1903.

UNITED STATES PATENT OFFICE.

PAUL L. CLARK, OF SCHENECTADY, NEW YORK, ASSIGNOR TO GENERAL ELECTRIC COMPANY, A CORPORATION OF NEW YORK.

SWITCH-CONTROL MECHANISM.

SPECIFICATION forming part of Letters Patent No. 729,134, dated May 26, 1903.

Application filed September 11, 1902. Serial No. 122,965. (No model.)

To all whom it may concern:

Be it known that I, PAUL L. CLARK, a citizen of the United States, residing at Schenectady, county of Schenectady, State of New York, have invented certain new and useful Improvements in Switch-Control Mechanisms, of which the following is a specification.

A plurality of electric circuits are frequently so arranged and interrelated that it is desirable or necessary that only one of such circuits be closed at a time. An example of such an arrangement of circuits is found in an instrument-switchboard where one ammeter, wattmeter, or the like is employed to measure successively the current, power, or the like in each leg of a multiphase system. In such a case the instrument is permanently connected to bus-bars, and switches are provided by which the instrument can be cut into any branch of the system, there being one of these switches for each phase. Under these circumstances it is necessary that only one of these switches be closed at a time, as the closing of more than one at a time would produce a short circuit and its accompanying disasters.

The object of my invention is the provision of means whereby only one of a plurality of switches can be closed at the same instant.

My invention consists in certain features to be more fully pointed out in the claims hereto annexed and in the following specification.

In the accompanying drawings, which illustrate one embodiment of my invention, Figure 1 is an end elevation, partly in section, showing the switches in one position. Fig. 2 is also an end elevation with parts in section and broken away and showing the switches in a different position, and Fig. 3 is a front elevation with parts broken away and in section.

In the drawings, 1, 2, and 3 represent three switches, of which it is desirable that only one be closed at a time. The switches are similar to each other and consist each of a pair of conducting-blades 4, which are connected at one end by a bar 5, which is made wholly or in part of insulating material. The other ends of the blades 4 are hinged to metal supports 6, which are carried by the switchboard-panel and form terminals of the circuit. A handle 7 is secured to the cross-bar 5, by means of which the switch can be thrown into or out of engagement with metallic clips 8, which form other terminals of the circuit.

The switch just described is an ordinary double-pole switch, and when the blades 4 are out of contact with the clips 8 the circuit in which the switch is placed is open at two points—that is, between each clip 8 and the corresponding metal standard 6.

Between the blades 4 of each switch are arranged transverse rods of insulating material 9, which are secured to the blades 4 by screws 10 or in any other suitable manner. The bars 9 carry the cam member 11. The cam member 11 is somewhat bow-shaped and is preferably made of metal. The ends of the bow terminate in eyes through which the rods 9 pass.

A long bent rod 13 is pivotally mounted on the switchboard-panel between the sets of terminals 6 and 8. Portions 15 of the rod 13 are in line with one another and are mounted in supports 14, carried by the panel-board, and form journals about which the rod rotates. Adjacent pairs of straight portions 15 are connected by bowed portions 16, 17, and 18. Each bowed portion consists of two end portions which are substantially at right angles to the portions 15 and connecting portions which are parallel to the portions 15. The bowed portions are displaced with reference to one another by an angle of one hundred and twenty degrees, as is clearly shown in Figs. 1 and 2. The bowed portions 16, 17, and 18 are so disposed that they come opposite the switches 1, 2, and 3, respectively, and the length of the connecting portions is sufficiently great to allow the switch-blade 4 to pass between the adjacent pair of end pieces of the bow, as is clearly shown in Fig. 3.

The bowed portions of the rod 13 and the cam members 11 are so proportioned that when a switch—as, for instance, the switch 1, (shown in Fig. 1)—is closed the cam 11 engages the appropriate bowed portion and holds it so that its end portions are at right angles to the switch-blade 4. In this position of the switch 1 the switches 2 and 3 can approach no nearer to the clips 8 than that indicated

in Fig. 1, where the cams 11 of the switches 2 and 3 are shown in engagement with their respective bow portions.

In Fig. 2 the switch 2 has been moved in the closing direction from the position shown in Fig. 1, as indicated by the arrow at the right. This has rotated the shaft 13 in the direction indicated by the arrow in Fig. 1 and by the engagement of the bow portion 16 with the cam 11 of the switch 1 has moved it into the position shown in Fig. 2. At this instant the bowed portion 18 is in such a position as to prevent the switch 3 from approaching as closely to the clips 8 as it is shown in Fig. 1. A continued movement of the switch 2 in the closing direction will move the switch 1 in the outer direction, and the switch 2 when closed will prevent the switches 1 and 3 from approaching any nearer to the clips 8 than that occupied by switches 3 and 2, respectively, in Fig. 1. If instead of closing switch 2 switch 3 had been moved in from the position shown in Fig. 1, the result would have been to rotate the shaft 13 in an opposite direction from that indicated by the arrow in Fig. 1 and to move switches 1 and 2 into the position occupied in Fig. 1 by switches 2 and 3, respectively.

It is thus seen that by the use of this mechanism it is impossible to close more than one of the switches at a time. The minimum distance between any pair of switches and the corresponding clips 8, and hence the liability of a short circuit due to arcs between a pair of switches and their clips, can be regulated by varying the proportions of the parts.

It is obvious that instead of controlling three switches by such a mechanism I can control two or four or even more switches by suitably proportioning the parts and by varying the angular displacements of the different cam-actuating members carried by the shaft 13.

Many modifications can be made in the construction shown without departing from the spirit of my invention, as I do not consider it to be limited to the details here shown.

What I claim as new, and desire to secure by Letters Patent of the United States, is—

1. In combination, a plurality of separately-movable switches, and means operated by the closing of any switch for throwing into the open position any other switch which may be in the closed position.

2. In combination, a plurality of switches, cams carried by said switches, a shaft having portions engaged by said cams, said cams and cam-engaging portions being so proportioned and located that when any switch is in the closed position the movement of any other switch into the closed position will rotate the shaft and open the first-mentioned switch before the second-mentioned switch reaches the closed position.

3. In combination, a switchboard, a plurality of pivoted switches mounted thereon, cams carried by said switches, a shaft rotatably mounted on the switchboard, the said shaft having bowed portions one for each switch, the said bowed portions being angularly disposed to one another, and the said switches being adapted to engage said bowed portions so that the movement of any switch into the closed position will move into the open position any switch which may be in the closed position.

4. In combination, a plurality of separately-movable switches, and means operated by the switches for automatically preventing the closing of more than one switch at a time.

In witness whereof I have hereunto set my hand this 9th day of September, 1902.

PAUL L. CLARK.

Witnesses:

BENJAMIN B. HULL,

HELEN ORFORD.