March 28, 1961 T. R. SMITH 2,976,711

WASHING AGITATOR WITH FLUID PUMPING MEANS, FILTER AND DISPENSER

Original Filed Sept. 18, 1957

Fig. 1.

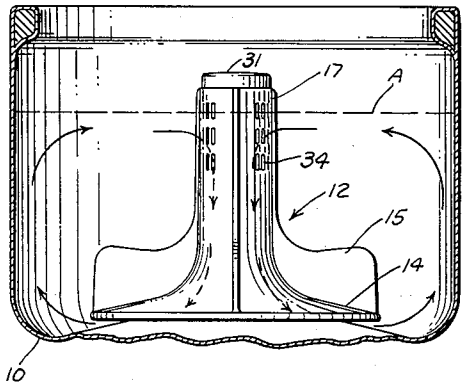

Fig. 2.

Fig. 3.

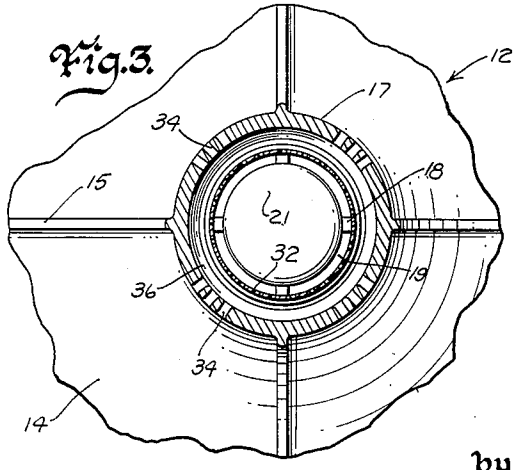

Fig. 4.

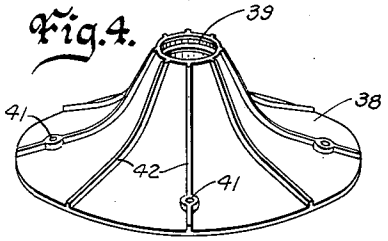

Inventor
Thomas R. Smith
by James S. Nettleton
Attorney

United States Patent Office

2,976,711

Patented Mar. 28, 1961

2,976,711

WASHING AGITATOR WITH FLUID PUMPING MEANS, FILTER, AND DISPENSER

Thomas R. Smith, Newton, Iowa, assignor to The Maytag Company, Newton, Iowa, a corporation of Delaware

Continuation of application Ser. No. 684,690, Sept. 18, 1957. This application Dec. 8, 1958, Ser. No. 778,999

9 Claims. (Cl. 68—17)

This invention relates to a combination detergent dispenser and fluid filter for a domestic type clothes washing machine. It relates specifically to a novel oscillatable agitator construction incorporating a fluid filter and providing a means for gradually dispersing powdered detergent into washing fluid placed within the machine incorporating this agitator.

This application is a continuation of my copending application, Serial No. 684,690, filed September 18, 1957, for improvements in Combination Dispenser and Filter Agitator, which application will now be permitted to lapse without prejudice, in view of its being superseded by this present application.

The primary objective of this invention is to provide a filter agitator for an oscillatable type agitator so as to filter lint and other foreign particles from the washing fluid retained within the washing machine utilizing this type of agitator.

An additional object of this invention is to provide a filter agitator capable of utilizing the oscillatory movements of the agitator itself to force washing fluid through the filter device contained within the agitator.

A still further object is to produce such a filter agitator for use with a low center drive construction for the agitator and still retain the air bell necessary in the use of such a low center drive arrangement.

A still further object of this invention is to provide a means for gradually dispensing a charge of detergent into a wash load without causing concentrated quantities of the detergent to come into contact with fabrics contained within the washing machine incorporating this agitator assembly.

Further objects and advantages of this invention will be apparent from the following specification and accompanying drawings in which:

Figure 1 is a diagrammatic partial vertical sectional view of a washing machine incorporating my invention;

Figure 2 is an enlarged fragmentary vertical sectional view of an oscillatable washing machine agitator incorporating the lint filter and detergent dispenser construction forming my invention;

Figure 3 is a fragmentary cross sectional view taken along line 3—3 of Figure 2; and

Figure 4 is a perspective view of the pump shroud which cooperates with the agitator to provide an air bell for the agitator driving shaft and provides a means for pumping washing fluid through the filter device carried by the agitator.

Referring now to the accompanying drawings in detail Figure 1 shows an imperforate tub or fluid container **10** receiving an agitator generally indicated by the reference numeral **12** and forming the subject matter of my invention.

Agitator **12** includes a flared lower portion **14** mounting agitator vanes **15** and rising into a hollow upstanding centerpost **17**. Centerpost **17** is provided with internal webs **18** which cooperate with each other to define internal apertures **19** providing a means of communication

between the hollow centerpost **17** and that portion of agitator **12** beneath flared portion **14**.

Webs **18** converge toward the longitudinal axis of centerpost **17** to join an inverted cup-shaped agitator driving hub **21** which is connected to the oscillatable driving shaft **22** through a resilient member **24** interconnecting the agitator drive hub **21** and the splined sleeve **25** receiving the agitator drive shaft **22**. The oscillatory movement imparted to shaft **22** may be produced by any of the conventional motion converting units now common in the appliance art. Agitator drive shaft **22** is journalled in the tub mounting member **27** which cooperates with the frusto-conical sealing washer **28** and clamp nut **29** to form a rigid watertight connection between tub **10** and mounting member **27**.

The upper end of the hollow centerpost **17** is normally covered by a cap member **31** which is rigidly connected to the flared upper end of the perforate cylindrical lint filter **32** located within the confines of the hollow centerpost **17** and adjacent the slotted water intake holes **34** formed in the periphery of the latter member. While the lint filter **32** may be of various screen or mesh constructions to filter out particles of lint, thread, scum or other foreign particles in the washing fluid flowing through holes **34**, lint filter **32** in actual practice is made of perforate stock having well over 200 holes per square inch.

A lip seal **36** encompassing the lower end of the lint filter member **32** and abutting the lower flared extension **35** of that member provides a seal between filter **32** and the inside walls of centerpost **17** and prevents lint and other particles from short circuiting filter **32**. The entire lint filter assembly formed by cap **31**, lint filter **32** and seal **36** may be manually removed from the top of centerpost **17** for cleaning or for providing a means for dispersing powdered detergent through the low portions of the agitator assembly as will be apparent hereinafter.

A means for pumping washing fluid through the lint filter **32** is provided by the flared pump shroud member **38** which conforms generally to the contour of the flared portion **14** with which it cooperates to form a centrifugal pump during the oscillations of agitator **12**. Shroud member **38** is imperforate except for the centrally located opening **39** and the holes **41** provided in the widened portions of the pumping vanes **42** for receiving the self-tapping screws **43** threaded into the flared portion **14** beneath the agitator vanes **15** for securing shroud member **38** onto tthe flared portion **14**. The pumping vanes **42** space the major upper surface of shroud member **38** from the lower surface of flared portion **14** so as to provide a plurality, in this embodiment eight, of generally radially extending pump passageways **40** communicating with the upper portion of the hollow centerpost **17** through openings **19**.

An O-ring seal **45** compressed between shroud member **38** and drive hub **21** adjacent the centrally located opening **39** provides an air seal under pump shroud member **38** and produces an air bell effect to prevent water from rising under agitator **12** to a level above the upper surface of tub mounting member **27**. This protects the agitator drive shaft and its splined connection to the agitator proper as well as preventing fluid seepage past the agitator shaft seal into the motion converting unit (not shown) for shaft **22** in the illustrated low center drive construction while permitting the fluid flow to take place between flared portion **14** and shroud member **38**.

In operation, tub **10** is filled approximately to the level indicated by line A in Figure 1 for full tub operation or to some lower level within the elevational range of holes **34**. The oscillation of shaft **22** by a conventional drive unit (not shown) causes the agitator vanes **15** to produce the desired washing operation within tub **10**. The oscilla-

tion of vanes 15 also normally causes a separation of lint particles from the fabrics being washed within the fluid contained within tub 10 and causes these particles to circulate within the body of fluid contained within that tub member and become deposited on other fabrics unless they are separated from the washing fluid. The natural circulation of the fluid within tub 10 as well as the water level maintained within that tub member causes washing fluid to enter the water intake apertures 34 and carry the particles of lint, thread or other foreign particles suspended within the washing fluid through the hollow centerpost 17.

These particles are filtered from the washing fluid entering centerpost 17 by means of the cylindrical lint filter member 32 which retains the filtered particles on its periphery while permitting the filtered fluid to pass downwardly through the hollow centerpost 17 to enter openings 19 and enter the generally radially extending passageways 40 formed by the cooperation of the flared portion 14, pump shroud member 38 and pump vanes 42.

A unidirectional fluid flow through the agitator assembly shown in Figure 2 is produced by means of the pump vanes 42 carried on shroud member 38 which moves the water outwardly from these passageways and away from the periphery of the flared portion 14 thereby tending to create a reduced fluid pressure at the innermost portions of the substantially radially directed passageways formed by elements 14, 42 and 38. Such a reduced pressure causes fluid to be sucked in through the water intake holes 34 to equalize this fluid pressure. This unidirectional flow shown by arrows in Figure 1 continues so long as the agitator 12 is oscillated by means of shaft 22. Upon the termination of movement of agitator 12 the lint filter 32 may be removed from the centerpost 17 by grasping cap 31 and lifting it from centerpost 17. This action allows the self-biased lip seal 36 to scrape free any particles or sediment accumulating upon the inner surface of the centerpost 17.

The assembly may also be used to gradually disperse powdered detergent to a clothes load by merely removing the lint filter assembly formed by elements 31, 32 and 36 and inserting the desired quantity of powdered detergent into the detergent charging chamber 46 located within centerpost 17 between the elevational levels and then replacing the lint filter assembly prior to the filling of tub 10. The loading of the powdered detergent into centerpost 17 in this manner allows the detergent to be gradually dissolved at a point isolated from the clothes themselves and then to be dispersed through the passageways formed by the cooperation of flared portion 14, shroud member 38 and pump vanes 42 during the tub filling initial agitation operations without directly coming into contact with the clothing placed within tub 10. The gradual dispersement of detergent in this manner prevents concentrated quantities of detergent from tending to weaken or deteriorate the fabric fibers being cleaned.

While the relative sizes of the openings in the passageways formed within this filter agitator assembly prevent the detergent inserted into centerpost 17 from flowing rapidly out these passageways, tests have shown that the unidirectional fluid flow through this agitator assembly successfully flushes these passageways clean during the agitation operations without producing accumulated detergent deposit formations in these passageways as the result of this method of dispensing powdered detergent into tub 10.

It should therefore be apparent that my proposed agitator construction provides a very favorable means for filtering lint, thread and other foreign particles from the washing fluid contained within the tub accommodating this agitator and does so at no expense to the air bell required to prevent water from entering the low center drive construction for the illustrated type machine. In addition, a means of very simple construction is provided for gradually dispensing powdered detergent into the tub containing this agitator so as to prevent concentrated quantities of such powdered detergent from coming into contact with the clothing contained in the tub container.

I claim:

1. A filter agitator assembly adapted to be submerged in a body of washing fluid and oscillated therein to effect a cleansing of fabrics placed within said fluid, comprising, an upstanding hollow centerpost, a plurality of fluid intake openings in said centerpost providing a means for fluid flow into said centerpost, an imperforate flared base portion connected to said centerpost, agitating vanes carried on said flared base portion for agitating said fabrics within said fluid, a hub portion positioned within said centerpost, a plurality of webs interconnecting said centerpost and said hub portion and defining a series of internal apertures between said centerpost and said hub portion, a pump shroud connected to said flared base portion and sealed to said hub portion to define an air bell beneath said pump shroud, a plurality of pumping vanes positioned between said flared base portion and said pump shroud to define a plurality of radially extending passageways communicating with said hollow centerpost through said internal apertures, a lint filter member positioned within said hollow centerpost and having a lower end sealed to the interior surface of said centerpost, said hub portion being adapted to receive an agitator shaft for oscillating said agitator vanes and said pump vanes to produce a unidirectional fluid flow through said lint filter member by way of said intake openings and said radially extending passageways to filter lint particles from said fluid passing through said agitator assembly.

2. A filter agitator assembly adapted to be submerged in a body of washing fluid and oscillated therein to effect cleansing of fabrics placed within said fluid, comprising, an upstanding hollow centerpost, a plurality of fluid intake openings in said centerpost providing a means for fluid flow into said centerpost, an imperforate flared base portion connected to said centerpost, agitating vanes carried on said flared base portion for agitation of fabrics placed within said fluid, a hub portion positioned within said centerpost, a plurality of webs interconnecting said centerpost and said hub portion to define a series of internal apertures between said centerpost and said hub portion, a flared shroud member conforming substantially to the contour of said flared base portion connected to said flared base portion and sealed to said hub portion to define an air bell beneath said shroud, a plurality of pumping vanes positioned between said flared base portion and said shroud to define a plurality of radially extending passageways communicating with said hollow centerpost through said internal apertures, a hollow lint filter member positioned within said hollow centerpost and having a lower end provided with a lip seal engaging the interior surface of said centerpost, said hub portion being adapted to receive an agitator shaft for oscillating said agitating vanes and said pump vanes to produce a unidirectional fluid flow through said lint filter member by way of said intake openings and said radially extending passageways to filter lint particles from said fluid passing through said agitator assembly.

3. A filter agitator assembly adapted to be submerged in a body of washing fluid and oscillated therein to effect cleansing of fabrics placed within said fluid, comprising, an upstanding hollow centerpost, a plurality of fluid intake openings in said centerpost providing a means for fluid flow into said centerpost, an imperforate flared base portion connected to said centerpost, agitating vanes carried on said flared base portion for agitation of fabrics placed within said fluid, a hub portion positioned within said centerpost, a plurality of webs interconnecting said centerpost and said hub portion and defining a series of

internal apertures between said centerpost and said hub portion, a shroud member having a contour conforming substantially to that of said flared base portion and provided with a centrally located shaft opening positioned adjacent said hub portion, a sealing member positioned within said centrally located opening and compressed against said hub portion to define an air bell beneath said shroud member, a plurality of pumping vanes positioned between said flared base portion and said shroud member and defining a plurality of radially extending passageways communicating with said hollow centerpost through said internal apertures, a removable lint filter positioned within said hollow centerpost and provided with a lip seal engaging the interior surface of said hollow centerpost, said hub portion being adapted to receive an agitator shaft extending through said centrally located opening in said shroud member for oscillating said agitating vanes and said pump vanes to produce a unidirectional fluid flow through said lint filter member by way of said intake openings in said radially extending passageways to filter lint particles from fluid passing through said agitator assembly.

4. A combination detergent dispenser and a filter agitator assembly adapted to be submerged in a body of washing fluid and oscillated therein to effect a cleansing of fabrics placed within said fluid, comprising, an upstanding hollow centerpost, a plurality of fluid intake openings in said centerpost providing a means for fluid flow into said centerpost, an imperforate flared base portion connected to said centerpost, agitating vanes carried on said flared base portion for agitation of said fabrics within said fluid, a hub portion positioned within said centerpost, a plurality of webs interconnecting said centerpost and said hub portion and defining a series of internal apertures between said centerpost and said hub portion, a shroud member having a contour conforming substantially to that of said flared base portion and provided with a centrally located opening positioned adjacent said hub portion, a sealing member contacting said shroud member and said hub member to seal said shroud member to said hub portion and to provide an air bell beneath said shroud member, means connecting said shroud member to said flared base portion, a plurality of pumping vanes positioned between said flared base portion and said pump shroud and defining a plurality of radially extending passageways communicating with said hollow centerpost through said internal apertures, said internal apertures and said radially extending passageways cooperating to provide restricted outlets for powdered detergent placed within said hollow centerpost, said hollow centerpost including a loading opening at the top thereof for receiving charges of powdered detergent to be dispensed into said fluid through said passageways, a removable cap member normally covering said loading opening, a lint filter member positioned within said hollow centerpost and connected to said removable cap member and provided with a lower end carrying a lip seal engaging the interior surface of said hollow centerpost, said hub portion being adapted to receive an agitator shaft extending through said centrally located opening in said shroud member for oscillating said agitating vanes and said pump vanes to produce a unidirectional fluid flow through said lint filter member by way of said intake openings and said radially extending passageways to gradually dispense charges of powdered detergent placed within said hollow centerpost and to filter lint particles from fluid flowing through said agitator assembly.

5. A combination detergent dispenser and filter agitator assembly adapted to be submerged in a body of washing fluid and oscillated therein to effect a cleansing of fabrics placed within said fluid, comprising, an upstanding hollow centerpost, a plurality of fluid intake openings in said centerpost at varying elevational levels to provide a means for fluid flow into said centerpost, an imperforate flared base portion connected to said centerpost and provided with a plurality of agitating vanes for the agitation of fabrics placed within said fluid, a hub portion positioned within said centerpost, a plurality of webs interconnecting said centerpost and said hub portion and defining a series of internal apertures between said centerpost and said hub portion, said hollow centerpost and said web members cooperating to define a detergent charging chamber for receiving charges of powdered detergent placed within said hollow centerpost, a shroud member conforming substantially to the contour of said flared base portion connected to said flared base portion and provided with a centrally located aperture positioned adjacent said hub portion, a sealing member compressed between said shroud member and said hub portion adjacent said centrally located aperture to provide an air bell beneath said shroud member, a plurality of pumping vanes positioned between said flared base portion and said shroud member and defining a plurality of radially extending passageways communicating with said hollow centerpost through said internal apertures, said internal apertures and said radially extending passageways providing the means for restricting the dispensing of powdered detergent placed within said detergent charging chamber, a loading opening at the top of said centerpost for receiving charges of powdered detergent placed within said detergent charging chamber, a removable cap member normally covering said loading opening, a perforate lint filter member connected to said cap member and provided with a lip seal engaging into the interior surface of said centerpost at a point below said fluid intake openings, said hub portion being adapted to receive an agitator shaft extending through said centrally located opening in said shroud member for oscillating said agitating vanes and said pump vanes to produce a unidirectional fluid flow through said lint filter member and said detergent charging chamber by way of said intake openings and said radially extending passageways to gradually dispense detergent into said fluid and to filter lint particles from said fluid.

6. A filter agitator assembly adapted to be oscillated in a body of washing fluid to effect a cleansing of fabrics placed in said fluid comprising an upstanding hollow centerpost, a flared base portion connected to said centerpost, agitating vanes carried on said flared base portion for agitating said fabrics within said fluid, a hub portion positioned within said centerpost, at least one web interconnecting said centerpost and said hub portion and defining at least one internal aperture between said centerpost and said hub portion, a pump shroud connected to said flared base portion and abutting said hub portion to define an air bell beneath said pump shroud, a plurality of pumping vanes positioned between said flared base portion and said pump shroud to define a plurality of passageways communicating with said hollow centerpost through said internal aperture, means for providing fluid flow including fluid intake openings in said agitator assembly, a lint filter member positioned on said centerpost and adapted to filter lint particles from said fluid passing through said agitator assembly, said agitator assembly having means to receive an agitator shaft for oscillating said agitator vanes and said pumping vanes to produce a unidirectional fluid flow through said lint filter by way of said intake openings and said passageways.

7. In a washing machine; a tub member adapted to contain washing fluid and fabrics to be washed; an agitator member in said tub and oscillatable relative to said tub member to effect washing of the fabrics in the washing fluid, said agitator member including an upstanding hollow center post, a flared base portion connected to said center post, agitating vanes carried on said flared base portion for agitating said fabrics within said fluid, a hub portion positioned within said center post, at least one web interconnecting said center post and said hub portion and defining at least one internal aperture be-

tween said center post and said hub portion, a shroud member in juxtaposition to said flared base portion and having a contour conforming substantially to that of said flared base portion and provided with a centrally located opening means to receive an agitator shaft, means securing said shroud member juxtaposed to said flared base portion, and a plurality of pumping vanes positioned between said flared base portion and said shroud member and defining a plurality of passageways communicating with said hollow center post through said internal aperture, said hub portion having means to driveably receive an oscillatable agitator shaft extending through said centrally located opening means in said shroud member for oscillating said pumping vanes to produce flow of washing fluid through said passageways and said upstanding hollow center post, means for providing for fluid flow through said agitator member including intake openings in said agitator member, and a lint filter means positioned on said center post to filter lint particles from said fluid passing through said agitator member.

8. In a washing machine; a tub member adapted to contain washing fluid and fabrics to be washed; an agitator member in said tub and oscillatable relative to said tub member to effect washing of the fabrics in the washing fluid, said agitator member including an upstanding hollow center post, a flared base portion connected to said center post, agitating vanes carried on said flared base portion for agitating said fabrics within said fluid, a hub portion positioned within said center post, at least one web interconnecting said center post and said hub portion and defining at least one internal aperture between said center post and said hub portion, a shroud member in juxtaposition to said flared base portion and having a contour conforming substantially to that of said flared base portion to define an air bell by abutment with said hub portion and provided with a centrally located opening means to receive an agitator shaft, means securing said shroud member juxtaposed to said flared base portion, a plurality of pumping vanes positioned between said flared base portion and said shroud member and defining a plurality of passageways communicating with said

hollow center post through said internal aperture, means for providing fluid flow through said agitator member including at least one fluid intake opening in said agitator member, said hub portion having means to driveably receive an agitator shaft extending through said centrally located opening in said shroud member for oscillating said pumping vanes to produce flow of washing fluid through said passageways and said upstanding hollow center post; and a lint filter means positioned on said center post to filter lint particles from said fluid passing through said agitator member.

9. In an agitator assembly adapted to be oscillated in a body of washing fluid to effect a cleansing of fabrics placed in said fluid comprising an upstanding hollow centerpost, an outwardly flared base portion connected to said centerpost, agitating vanes carried on said flared base portion for agitating said fabrics within said fluid, a hub portion positioned within said hollow centerpost, at least one web interconnecting said centerpost and said hub portion and defining at least one internal aperture between said centerpost and said hub portion, a pump shroud secured juxtaposed to the underside of said flared base portion, a plurality of pumping vanes positioned between said flared base portion and said pump shroud to define a plurality of passageways communicating with said hollow centerpost through said internal aperture, opening means defined in said agitator assembly to complete a circulatory path for said washing fluid through said passageways and said hollow centerpost, said agitator assembly having means to receive an agitator shaft for oscillating said agitator vanes and said pumping vanes to produce a unidirectional fluid flow through said assembly by way of said opening means and said passageways.

References Cited in the file of this patent

UNITED STATES PATENTS

2,235,645	Rocke	Mar. 8, 1941
2,498,894	McCormick	Feb. 28, 1950
2,522,242	Wagner	Sept. 12, 1950
2,642,733	McCormick	June 23, 1953
2,744,402	Smith	May 8, 1956