July 3, 1951 W. W. HILTON 2,558,955

CONTAINER AND DISPLAY KIT

Filed Oct. 19, 1946 2 Sheets-Sheet 1

Fig. 1.

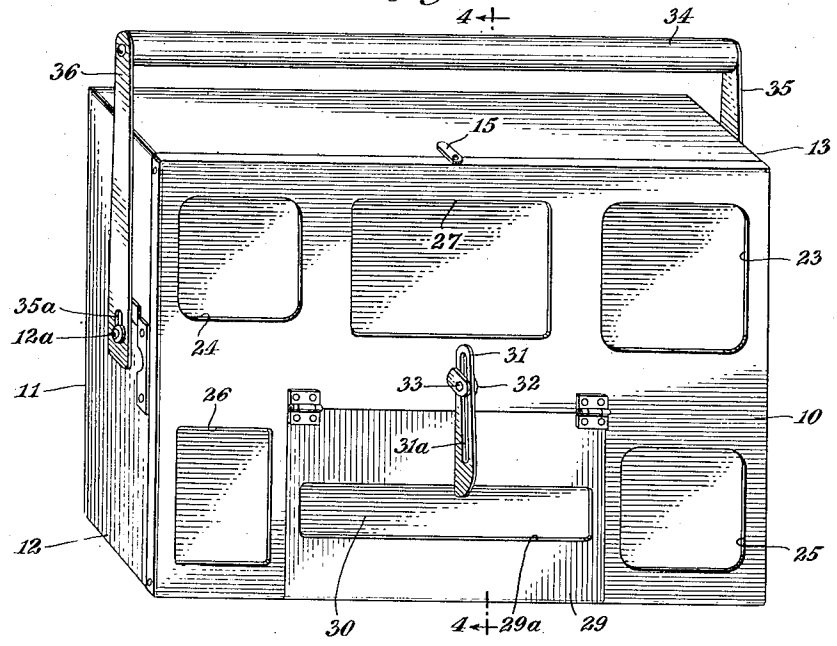

Fig. 2.

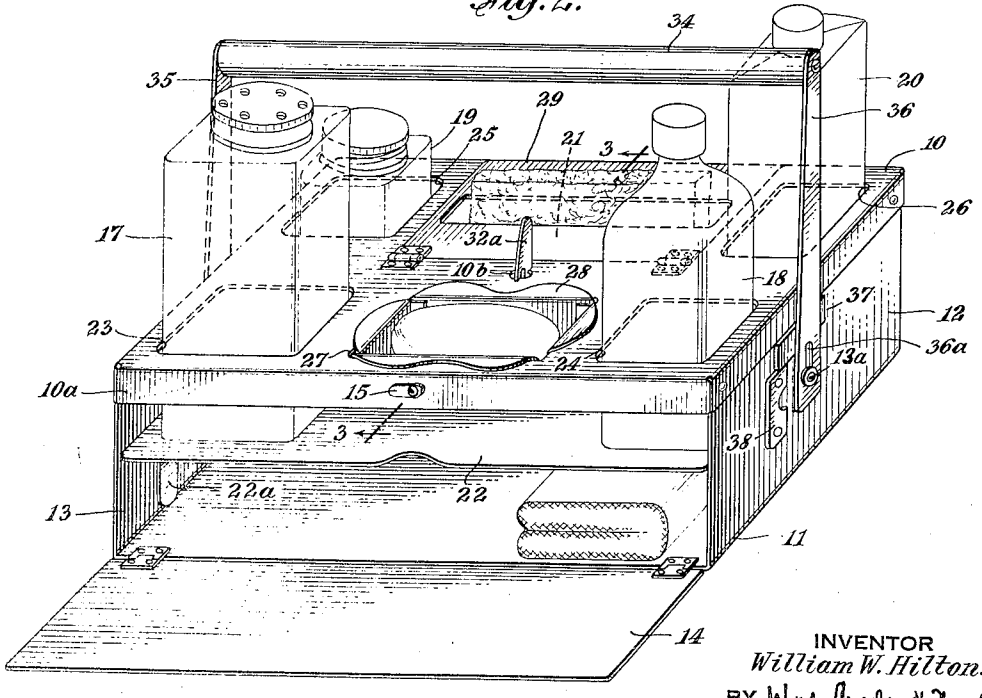

INVENTOR
William W. Hilton.
BY Woodcock, Crosby & Neal
ATTORNEY

July 3, 1951 W. W. HILTON 2,558,955

CONTAINER AND DISPLAY KIT

Filed Oct. 19, 1946 2 Sheets-Sheet 2

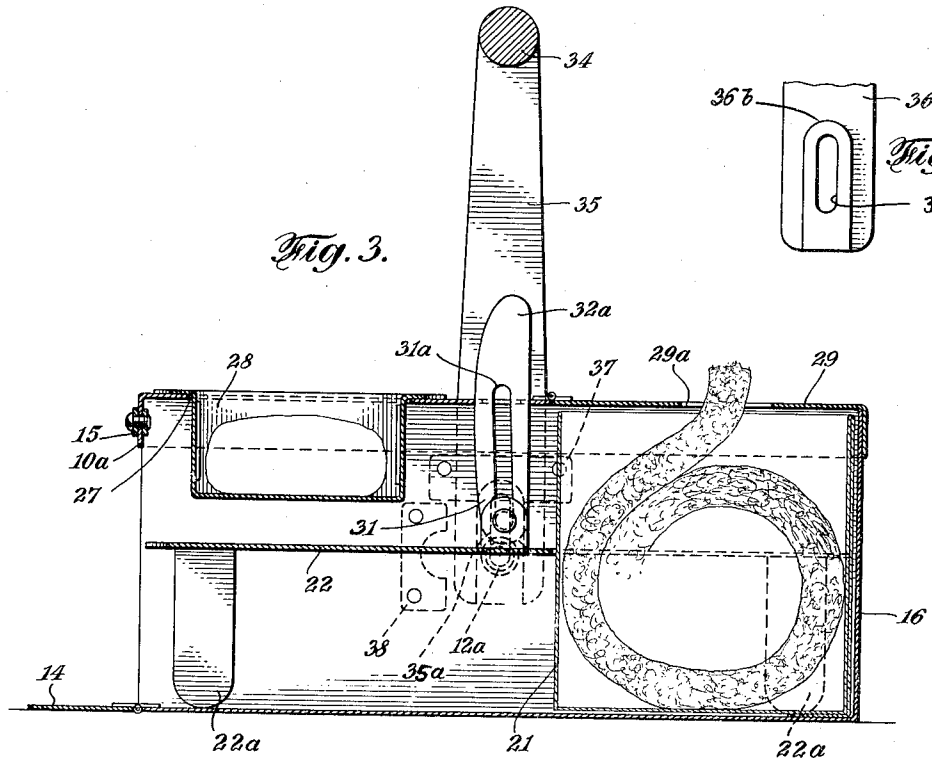

Fig. 3.

Fig. 5.

Fig. 4.

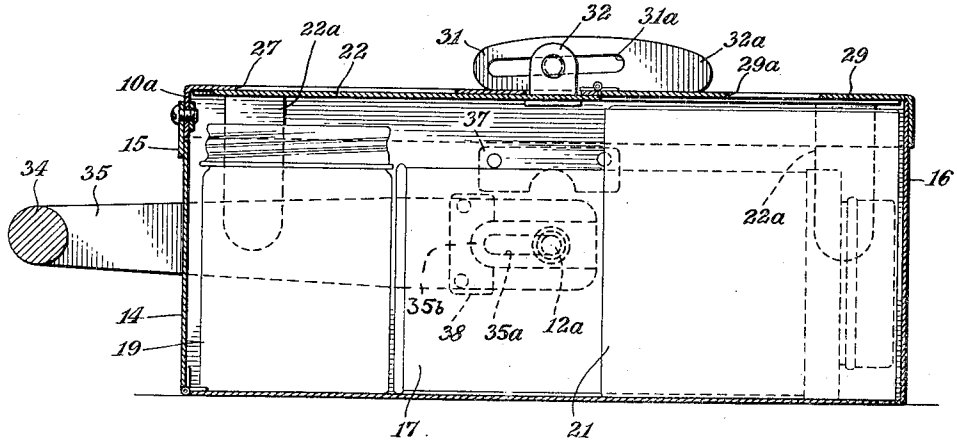

INVENTOR
William W. Hilton.
BY Howard, Crosby & Read
ATTORNEY

Patented July 3, 1951

2,558,955

UNITED STATES PATENT OFFICE

2,558,955

CONTAINER AND DISPLAY KIT

William W. Hilton, Roslyn, N. Y.

Application October 19, 1946, Serial No. 704,424

2 Claims. (Cl. 206—45.19)

1

This invention relates to containers, and more particularly to kits which may be employed for containing objects which may be mounted for use or display upon the kit.

Display kits or containers have been heretofore proposed for providing allegedly convenient means for transporting and/or displacing and using objects which may be carried within the container. However, such containers or kits have failed to provide suitable means for positively holding the objects which are to be used or to be displayed, and thus have made it necessary to place said objects when in use upon unsteady supporting surfaces, thus making it liable to be overturned and broken.

Moreover, containers or kits of this type which have been suggested in the past have not been provided with suitable means for safely and conveniently transporting the same by suitable handles. The danger has always existed in the past of overturning the container and spilling the contents. Furthermore, handles for containers of this character have not been adapted for safely moving a container in more than one position thereof.

It has been necessary in the past in devices of this type to employ complicated and expensive means for supporting the objects which are carried within the container when it is desired to make use of such objects and when it is desired to place same in positions from which they are conveniently available.

According to the present invention a device is provided which will eliminate the above noted difficulties.

Various further and more specific features and advantages of the invention will clearly appear from the detailed description given below taken in connection with the accompanying drawings which form a part of this specification and illustrate, by way of example, preferred arrangements for carrying out the invention. The invention consists in such novel combinations of features and apparatus as may be shown and described in connection with the device herein disclosed.

In the drawings:

Figure 1 is an isometric view illustrating one embodiment of the container adapted for being transported by hand;

Fig. 2 is an isometric view of the embodiment of the container shown in Fig. 1 in an open condition with the contents of the container positioned for use or display;

2

Fig. 3 is a sectional view taken on line 3—3 of Fig. 2;

Fig. 4 is a sectional view taken on line 4—4 of Fig. 1; and

Fig. 5 is a fragmentary view with parts broken away of a portion of the handle structure for the container.

Referring to the drawings in further detail, an inexpensive kit is provided for transporting a plurality of objects such as small containers of, for example, toilet preparations which kit is adapted not only for carrying the smaller articles but is adapted for supporting said articles in position for convenient use or in position for display purposes.

The embodiment shown in the drawings, for example, may comprise a kit of toiletries for an infant. A serious problem arises, when for example traveling with an infant, of conveniently carrying the multiplicity of toilet articles which are required to tend the infant. For example, it is conventional practice and desirable to perform an infant's toilet by use of lotions, powder, skin cream, soap, gauze, diapers and related articles. This multiplicity of articles, of course, may be conveniently placed in the home and may be available for instant use in desired locations. However, when traveling, for example, by passenger aircraft or by railroads the person tending the infant normally finds it to be a difficult problem to position these many objects for convenient use especially when performing the infant's toilet in restricted quarters found in such conveyances. This of course may be true not only with conveyances of this type but also in crowded small quarters within the home. The danger of upsetting containers of toilet preparations is a real one whether traveling or not. The infant or whoever happens to be employing the toilet preparations may knock them over with resultant spilling of the contents.

The present invention is adapted not only for use as a kit for conveniently handling containers of the character above described but may be employed with any type of object which may be carried therein. Moreover, the novel kit embodying the present invention may be employed for advertising or display purposes of objects which may be carried within the kit. The utility of the novel kit consequently is manifold.

As shown in the drawings, the novel kit comprises preferably a box-like container of rectangular cross section having parallel upper and lower side members 10 and 11 which are held in spaced relationship by a suitable peripheral mem-

ber including end surfaces or members 12 and 13 which preferably are parallel and perpendicular to the upper and lower side members 10 and 11. A suitable lid 14 may be hingedly mounted on the lower side member 11 and may be held in a closed position by means of, for example, the pivoted finger 15. The latter may be mounted upon a flange 10*a* which is formed around the upper side member 10. Opposite to the lid member 14 and parallel to it when closed is a rear face member 16 (Figs. 3 and 4) upon which the novel kit may rest when it is closed and in an inactive condition. Said peripheral surface member includes said end surfaces 12, 13, said lid 14 and said rear face member 16.

The novel kit thus far described is of a normal box-like structure which may be adapted for carrying a plurality of small objects which, in the form shown, comprise toilet articles, for example, as above mentioned for an infant. Consequently, the kit may have stowed therein, for example, a container 17 for talcum powder, a container 18 for skin oil, a container 19 for skin cream, a container 20 for an antiseptic lotion, and, in addition, a suitable box 21 of cotton or gauze. If desired, a cake of soap may be carried in the kit together with suitable cloths comprising, for example, diapers or towels.

It is highly desirable that this multiplicity of articles be held by some positive and convenient means whereby one or all of them may be conveniently available and localized. They should be positively held to prevent overturning and breaking of the small containers which may be of some frangible material.

Novel means are provided for holding said small containers positively and in such a manner that they are conveniently available comprising a platform member 22 which cooperates for this purpose with a plurality of openings in said upper side member the sides of which are designed for closely conforming to the shape of the containers.

The upper side member 10 has formed therein a plurality of openings 23, 24, 25, and 26. An additional opening 27 in said upper side member may be formed for receiving, for example, a soap dish 28.

In order to make the above mentioned cotton readily available, it is desirable for the box 21 of cotton to be entirely enclosed within the kit proper and to be there positively held adjacent a suitable slot through which the cotton may be withdrawn if desired. In the form shown, the box 21 of cotton is positioned beneath a hinged flap 29 which preferably is similar in cross-sectional shape to the shape of the box, the latter being insertable through an opening 30 which the lid or flap 29 is adapted for covering. A slot 29*a* is formed within the flap 29 through which said cotton may be withdrawn. As shown, the box 21 of cotton is equal in depth to the distance between the parallel side members 10 and 11. Thus the upper surface of said box is in contact with the lower surface of the flap 29 when the latter is in a closed position. It is of course necessary to accommodate the shape of the platform 22 to the shape of the box of cotton 21 and consequently a suitable portion of said platform is cut away to conform to the cross-sectional shape of said box.

When the novel kit is packed and closed and is prepared for being moved it is clear that the platform 22 must be held closely adjacent the above mentioned openings in order to close same and thus to prevent the loss of articles stowed

therewithin. Novel means are employed for holding said platform 22 adjacent the upper side member 10 and for concurrently holding down the flap 29 which covers the box or container 21. Said means comprise a locking arm 31 having a slot 31*a* therein which is associated with the platform member 22 by means of a suitable bracket 32 having a slot-engaging pin 33 mounted thereupon which passes through slot 31*a*. It is desirable for the upper side member 10 to have a suitable perforation 10*b* therein through which the bracket 32 may extend whereby the platform 22 may be drawn closely adjacent the side member 10 and may be locked in such position by means of the arm 31 in a manner illustrated in Figs. 1 and 4. The arm 31 when in the position shown in said figures serves not only to hold the platform in a position to close certain of the openings in the side member 10 but a portion 32*a* of the locking arm extends over the flap 29 to hold same in a closed position. Of course, when it is desired to move the platform 22 away from said openings, after the kit has been unpacked the slotted arm 31 is thrust to a position whereby it may be pivoted about the pin 33 whereupon the locking arm, now in a vertical position, may be lowered through the perforation 10*b*. The slot 31*a* formed within the locking arm 31 preferably is inclined slightly as indicated in Fig. 4 whereby a wedge locking action may be obtained when the locking arm is moved to the left as shown in Fig. 4.

The locking arm 31 serves not only as a means for locking the platform 22 in contact with the upper side member 10 whereby the openings in said side member are closed, but it serves the additional purpose of preventing the platform from sliding out from under the containers when they are in position in the respective openings. This is accomplished by contact of said locking arm with the sides of the opening 10*b*.

In order to hold the objects or containers, which may be contained within the kit, in a readily available position, it may be desirable for a considerable portion thereof to extend above the upper side member 10 when they are held within the above mentioned openings designed therefor. Consequently, it is desirable for the platform member to be held, for example, about midway between the upper and lower side members of the kit. Means are provided for holding the platform member 22 in such a spaced relationship, as shown in Figs. 2 and 3, comprising suitable legs 22*a* which preferably are of a length which is less than the distance between the upper and lower side members. The length of said legs, for example, may be approximately half of said distance. Consequently, when the kit has been emptied of its contents platform 22 may be lowered to the position indicated in Fig. 2. Thus, the container such as 17 may be inserted within the opening 23 which is designed therefor and which is of a shape similar to the cross-sectional shape of said container. Sufficient clearance is provided to permit easy insertion. The latter thus will be positively held by the cooperation of the platform 22 and the sides of the opening 23. The other containers 18, 19 and 20 may be similarly held, and soap dish 28 may be positioned within the opening 27 and there positively held.

In a kit of this type, it is highly desirable to provide suitable means to carry same by hand not only when it is packed and closed as shown in Fig. 1 but also when it is open with the containers in position as shown in Fig. 2. Novel

means are provided for carrying out this purpose comprising a handle member 34 which is operatively associated with the kit by means of depending arms or support members 35 and 36. The arms 35 and 36 each have adjacent the lower extremity thereof suitable slots 35a (Fig. 1) and 36a (Figs. 2 and 5) which cooperate respectively with pivots 12a and 13a. The function of the slots is to permit longitudinal movement of the arms 35, 36 to permit suitable lugs or projections thereupon, such as 35b (Fig. 4) and 36b (Fig. 5), to engage cooperating slotted members 37 (Figs. 2 and 4). The latter members may be rigidly mounted upon the end surfaces 12 and 13 whereby the handle and kit are in rigid relationship when the kit is lifted in the position shown in Fig. 2. Thus the danger of overturning the kit and dropping the containers, which are held in their respective openings, is eliminated and thus said kit may be moved from place to place conveniently when it is in this condition.

Slotted members 38 (analogous to 37) are mounted perpendicular to said members 37 and are so constructed and arranged that when it is desired to carry the kit as shown in Fig. 1, the lugs 35b, 36b may be disengaged from the slotted members 37 by axially moving the handle support members downwardly (Fig. 2), and thereafter angularly shifting the handle assembly through 90 degrees, and thereafter moving lugs 35b, 36b into operative engagement with the slotted members 38 whereby the kit again will be rigid relative to the handle and thus will prevent tumbling of the kit.

In operation, as above set forth, the normal carrying condition of the kit is indicated in Fig. 1 wherein the platform 22 is locked closely adjacent the upper side member 10 by means of the slotted locking arm 31. The kit has stowed therein, for example, the containers which are illustrated in Fig. 2. When it is desired to display the contents of the kit or when it is desired to make said contents available for convenient use, the kit is laid upon its underside 11 with the upper side member 10 horizontal. The side lid 14 is opened in a conventional manner by disengaging the finger 15 whereupon the containers 17, 18, 19, 20 and 28 are extracted therefrom. The slotted locking arm 31 is moved to such a position that it may be pivoted about the pin 33 and moved into a vertical position as shown in Fig. 3 whereby said arm may enter the perforation 10b and the platform 22 may thus be lowered to the position shown in Figs. 2 and 3. The container 21 may be normally left within the kit and the contents thereof may be extracted through the slot 29a. Said containers 17, 18, 19, 20 and 28 now may be inserted in their respective openings. All of said containers when thus inserted are positively supported in such a manner that they may be easily removed therefrom because of the existence of a suitable clearance at their respective openings. However, they are prevented from overturning by the cooperation of the platform member 22 and the sides of said openings. The container such as the soap dish 28 need not extend downwardly into contact with the platform member 22 but may be supported within its opening by a suitable flange formed thereon.

There is thus provided a novel container which is ideally adapted for displaying objects for merchandising purposes and which also is effective to solve the above mentioned serious problem of localizing a plurality of containers in such a manner that they are readily available but are not subject to being overturned and the contents thereof spilled and the containers broken.

While the invention has been described with respect to a preferred embodiment, it will be understood by those skilled in the art after understanding the invention that various changes and modifications may be made without departing from the spirit and scope of the invention, and it is intended therefore in the appended claims to cover all such changes and modifications.

What is claimed as new and desired to be secured by Letters Patent is:

1. A manually portable kit for holding a plurality of objects and comprising in combination: parallel upper and lower side members, a peripheral surface member for interconnecting said side members and holding same in spaced relationship, said upper side member having a like plurality of perforations therein, said side and peripheral members comprising the bounding members of said kit; said peripheral surface member including a movable lid for a filler opening for said kit; a platform member movable between said upper and lower side members in a direction which is substantially perpendicular to said side members, said platform member being substantially equal in area and similar in shape to said side members and having an outer face for closing the perforations in said upper side member when pressed thereagainst, said platform member being substantially in contact with said peripheral surface member; a plurality of legs mounted upon the margin of said platform member and extending toward said lower side member, said legs being of equal length and less than the distance between said side members; and means for detachably locking said platform member closely adjacent said upper side member whereby the perforations therein are covered; each of such perforations being formed for receiving an object of corresponding cross-sectional shape and size, each of the objects when removed from said container and inserted from the outside thereof into its corresponding perforation being supportable by said platform when in parallel spaced relation to said side member and also supportable by the lip of the respective perforation.

2. A manually portable kit for holding a plurality of objects and comprising in combination: parallel upper and lower side members, a peripheral surface member for interconnecting said side members and holding same in spaced relationship, said upper side member having a like plurality of perforations therein, said side and peripheral members comprising the bounding members of said kit; said peripheral surface member including a movable lid for a filler opening for said kit; a platform member movable between said upper and lower side members in a direction which is substantially perpendicular to said side members, said platform member being substantially equal in area and similar in shape to said side members and having an outer face for closing the perforations in said upper side member when pressed thereagainst, said platform member being substantially in contact with said peripheral surface member; means for supporting said platform member in parallel spaced relation to said upper and lower side members and against movement toward said lower side member beyond a preselected limit of motion whereby articles positioned in said perforations and contacting said platform may be supported thereby; and means for detachably locking said platform

member closely adjacent said upper side member whereby the perforations therein are covered; each of such perforations being formed for receiving an object of corresponding cross-sectional shape and size, each of the objects when removed from said container and inserted from the outside thereof into its corresponding perforation being supportable by said platform when in parallel spaced relation to said side member and also supportable by the lip of the respective perforation.

WILLLIAM W. HILTON.

REFERENCES CITED

The following references are of record in the file of this patent:

UNITED STATES PATENTS

Number	Name	Date
685,901	Baker	Nov. 5, 1901
1,165,304	Whittaker	Dec. 21, 1915
1,803,919	Seay	May 5, 1931
1,887,270	Krieg	Nov. 8, 1932
2,358,071	Hurtado	Sept. 12, 1944
2,427,004	Kampf	Sept. 9, 1947

FOREIGN PATENTS

Number	Country	Date
20,478	Great Britain	1914
378,495	Great Britain	Aug. 11, 1932