United States Patent

[11] 3,615,719

[72] Inventors **Johann Michel**
Ulmerstrasse 160a;
Charlotte Keller, Blutenstrasse 4; Hans-Joachim Keller, Blutenstrasse 4, all of Augsburg, Germany

[21] Appl. No. **690,456**
[22] Filed **Dec. 14, 1967**
[45] Patented **Oct. 26, 1971**
[32] Priority **Dec. 19, 1966**
[33] **Germany**
[31] **M 72071**

[54] **APPARATUS FOR INDICATING THE THERMAL HISTORY OF DEEP-FREEZE PRODUCTS PARTICULARLY FOODS**
5 Claims, 13 Drawing Figs.

[52] **U.S. Cl.** ..... **99/192 TT,** 62/130, 73/358, 99/192 R, 116/114.5, 204/195
[51] **Int. Cl.** **A23b 3/06,** G01d 21/00
[50] **Field of Search** 99/192, 194, 198, 208, 195, 209; 73/358; 116/114.5; 62/130; 204/195; 206/65

[56] **References Cited**

UNITED STATES PATENTS

Re. 25,499	12/1963	Fenity et al.	99/192
2,560,537	7/1951	Andersen	99/192
2,614,430	10/1952	Ballard et al.	73/358
2,951,764	9/1960	Chase	99/192
2,971,852	2/1961	Schulein	99/192 TI
3,065,083	11/1962	Gessler	99/192
3,140,611	7/1964	Kliewer	73/358
3,177,843	4/1965	Geocaris	116/114.5
3,243,303	3/1966	Johnson	99/192
3,312,079	4/1967	Siebert	62/130
3,336,212	8/1967	Nicholas et al.	204/195
2,966,261	12/1960	Bradbury	206/65

Primary Examiner—Norman Yudkoff
Assistant Examiner—F. E. Drummond
Attorney—Karl F. Ross

ABSTRACT: A system for indicating the conditions of storage and treatment of deep-frozen goods which consists of a sealed receptacle containing a pair of interactable components, one of which is flowable while the other is absorptive and capable of producing a visible indication of the degree of interaction. The liquid component is retained in a closed vessel within the receptacle and, also within the receptacle, means is provided for permitting escape of the liquid at a predetermined instant. The liquid is separated from its coacting component also by a liquid-soluble barrier which may be omitted in limited regions to permit direct action immediately upon openings of the liquid-storage vessel and thereby indicate directly the fact that the device is functioning.

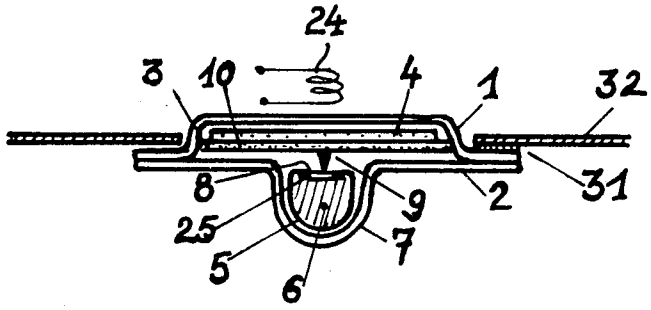

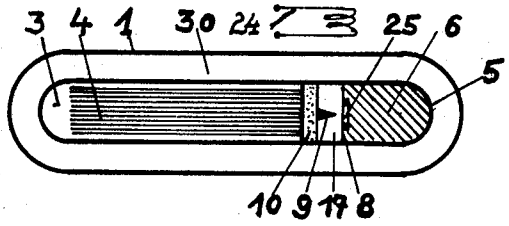

FIG. 1

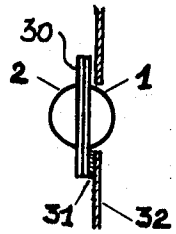

FIG. 2

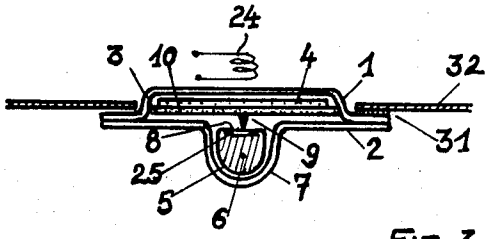

FIG. 3

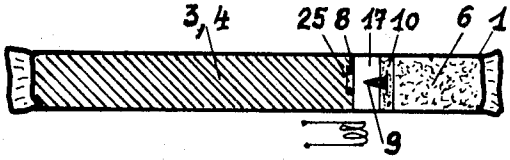

FIG. 4

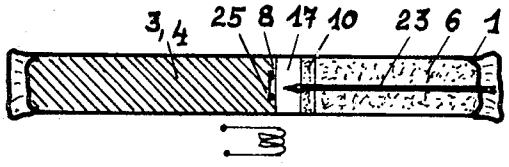

FIG. 5

Johann MICHEL
Charlotte KELIER
Hans-Joachim KELIER
INVENTORS

BY

Karl F. Ross

Attorney

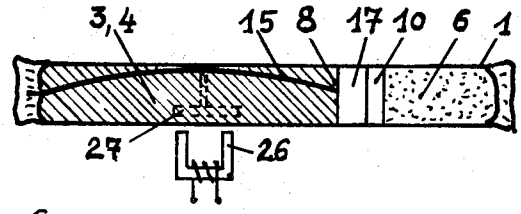

FIG. 6

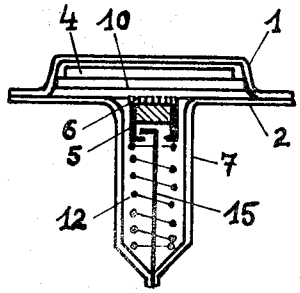

FIG. 7

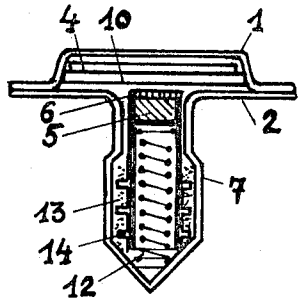

FIG. 8

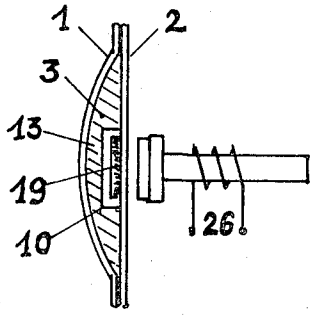

FIG. 9

Johann MICHEL
Charlotte KELLER
Hans-Joachim KELLER

INVENTORS

BY

Attorney

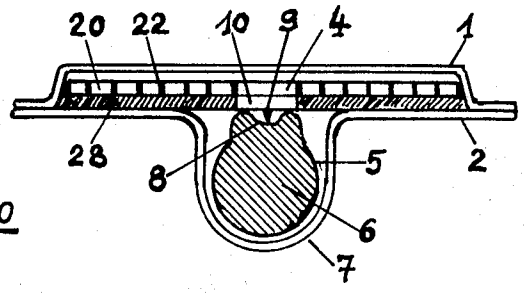

FIG. 10

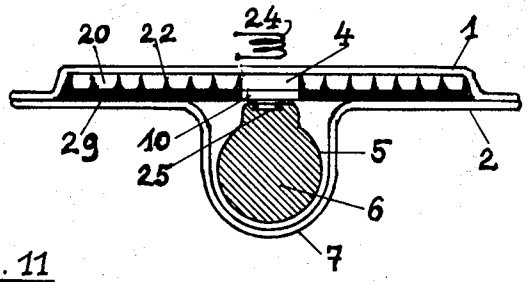

FIG. 11

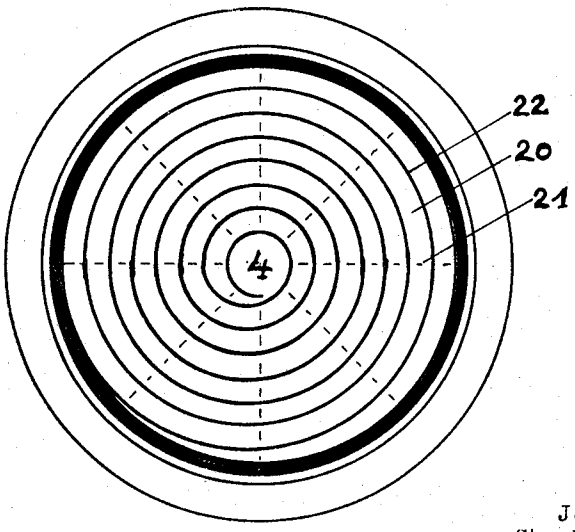

FIG. 12

Johann MICHEL
Charlotte KELLER
Hans-Joachim KELLER

INVENTORS

BY

Karl F. Ross

Attorney

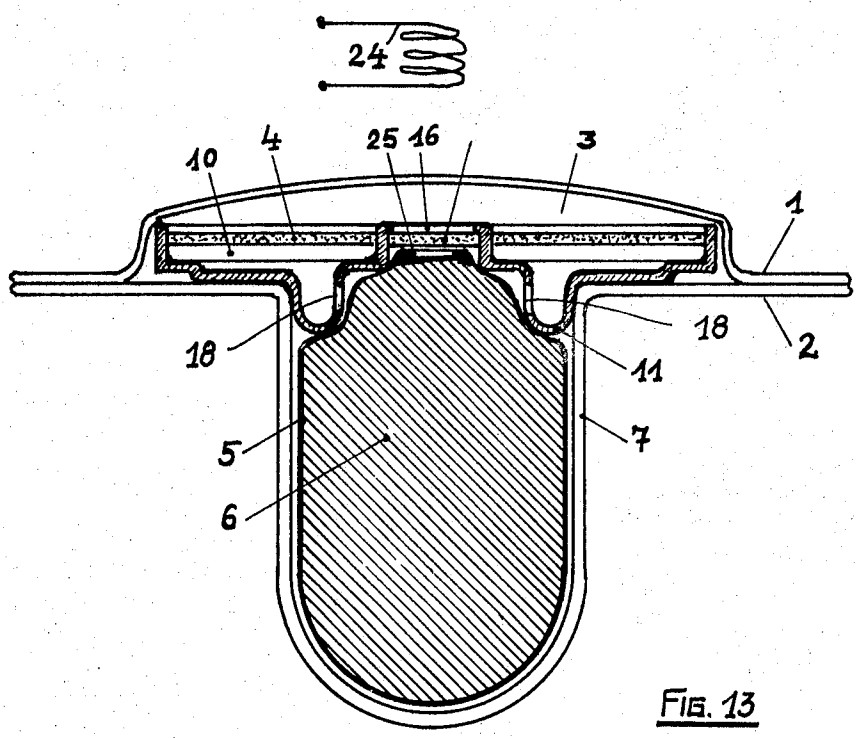

FIG. 13

Johann MICHEL
Charlotte KELLER
Hans-Joachim KELLER

INVENTOR.

BY Karl F. Ross

Attorney

APPARATUS FOR INDICATING THE THERMAL HISTORY OF DEEP-FREEZE PRODUCTS PARTICULARLY FOODS

The invention relates to a method and to apparatus for indicating the condition, of deep-freeze products, and particularly foods which are either in a state of deterioration or completely spoiled, by means of an indicator provided on the goods or on the wrapping thereof, in which a signalling medium reacting to predeterminable temperature rises and acts upon a suitable signal body to produce a visible alarm.

The increasing use of refrigerated or frozen products, particularly foods, necessitates the provision of special testing and control means which are also suitable for bulk goods, both for detecting the state of refrigeration of the goods and for checking whether the cold chain from producer to consumer has remained intact.

While producers and wholesale distributors have no particular difficulties in controlling the temperature by means of measuring and control instruments, it may well happen that the goods to be cooled are damaged by incorrect temperatures during transport or during storage on the intermediary distributor's or final distributor's premises.

It is particularly when a large number of small packages of frozen goods are to be accommodated in show cases or in open chests on the last distributor's premises that the purchaser is not always afforded the guarantee of receiving perfect goods. Apart from deterioration in quality, there may be injury to health resulting from decomposition of the goods by bacteria when the cold chain is interrupted for an extended period of time. In addition, the purchaser is unable readily to detect whether the food or the luxury food has previously thawed and then refrozen and is thus of an inferior quality, is spoiled, or injurious to health.

It is known that attempts have been made to reduce these risks by various means, for example by means of indicators provided on the goods to be protected or on the wrapping, so that the respective state of refrigeration or the intactness of the cold chain so far may be indicated by deformation or by changes in color.

Thus, for example, chemically or physically reacting indicators are known which indicate any change in the condition of the goods resulting from temperature rises by changing their shape or color or by bursting. Changes of stress occasioned by freezing or thawing in the material of the indicators are generally utilized, but the fact that the states of stress vary in accordance with the rate at which the changes of temperature take place, is disregarded. The known indicators have the additional disadvantage that their manufacture, storage, or application to the frozen goods is too complicated, or that the readings provided thereby are not sufficiently reliable, or that they cannot be manufactured at a price in keeping with the value of the goods to be protected.

It is the object of the invention to avoid these disadvantages and to provide reliable indicators for the purpose described by simple inexpensive means.

Proceeding from the method hereinbefore described, the invention consists essentially in that the time interval between the reaction of the signalling medium and its effect upon the signal body is extended by a reaction inhibitor. By this reaction inhibitor, which may be provided, for example, in the form of an intermediate layer, there is no indication given that during harmless temporary temperature rises in the goods which therefore are not indicated by the indicator. It is only when the total effect of a single temperature rise or of repeated temperature rises produces a state of endangering the goods, that the reaction inhibitor is to be overcome by the signalling medium, the alarm being then made discernible in the form of changes in color or shape, markings or the like produced by the direct effect upon the signal body.

The invention relates also to numerous constructions of indicators which are reliable in operation, and can be produced at low cost as described in the specification and diagrammatically illustrated by way of example in the accompanying drawing, in which

FIG. 1 is a longitudinal section through a simple indicator according to the invention;

FIG. 2 is a front elevation of the indicator illustrated in FIG. 1;

FIG. 3 is a cross section through one modification of the indicator according to the invention;

FIGS. 4 to 6 are longitudinal sections through further indicators of various constructions;

FIGS. 7 to 9 are cross sections through indicators provided with locking means;

FIGS 10 and 11 are cross sections of indicators, in which the signal bodies are provided in the form of strips;

FIG. 12 is a plan view of an indicator provided with a spiral signal body; and

FIG. 13 is a cross section through an indicator of a preferred construction.

FIGS. 1 and 2 show the principle on which the construction of the indicator according to the invention is based. A casing made of a transparent material 1, is joined by means of an adhesive or by welding to a counterpiece 2 which may consist of any material. The assembled casing is subdivided into a signal space 3 which contains a signal body 4, and a space or container 5 for a signalling medium 6. In the illustrated construction, the signal body 4 may consist of an absorbent material, such as blotting paper, diatomaceous earth, chalk or the like, whereas the signalling medium 6 consists of a liquid which, upon combining with the signal body 4 produces a signal, for example by coloring the signal area. The space 5 containing the signaling medium is sealed off from the signal space 3 by a thin, impermeable partition 8. The signal space 3, provided with the absorbent signal body 4, is closed by an intermediate layer 10 which is dissolved by the signalling medium 6. The intermediate layer 10 may consist, for example of molten sugar of a glassy consistency, egg white, glue, gelatine, albumin, or the like, and when the partition 8 is opened, must first be dissolved by the signalling medium 6 before the latter can be absorbed by the signal body 4 to produce a signal. The interval between the moment at which the signalling medium 6 is released and the moment at which the signal becomes visible on the signal body 4 can be predetermined according to the nature, thickness and composition of the intermediate layer 10. Since the rate at which a given intermediate layer is dissolved is determined by the temperature and the time for which the thawed signalling medium can act upon the intermediate layer, the dissolving process is interrupted whenever a temperature rise has been negligible or brief, and the signalling medium 6 will refreeze before it reaches the signal body 4.

Upon the next thawing of the signalling medium 6, the dissolving process of the intermediate layer 10 starts at the position at which it has previously been stopped by the freezing process. Thus, the intermediate layer 10 permits a plurality of negligible temperature rises to accumulate and thus to be just as effective in producing a reliable signalling as single or few influences of longer duration which are harmful to the goods.

The container 5 for the signalling medium is opened before or after the freezing process by the application of a slight pressure to the container 5 for the signalling medium 6, the partition 8 being thus pressed manually or by means of a mechanical device against a suitable device, for example a spike 9, and pierced; alternatively as a result of the shrinkage of the casing 1, 2 due to cold the spike 9 automatically pierces the partition 8 during the freezing process, or the container for the signalling medium is opened, without physical contact, from the outside by a small piece of metal 25, preferably in the form of a ring, which is provided in the partition 8, and which when the goods, which may be in the frozen state, pass through an electric alternating field 24, is heated as a result of the formation of eddy currents, and thus opens the partition 8. The alternating field 24 may be operated at any suitable frequency. When higher frequencies are used, the signalling medium or portions thereof may serve directly for induction heating. The partition may also be opened by mechanical vibrations, par-

ticularly of the small piece of metal 25, by supersonic control. In exceptional cases, the focus of a strong source of radiation (light, laser) may be used for opening the partition 8. The space 17 between the partition 8 and the intermediate layer 10 serves for indicating by a preliminary signal that the indicator is ready to indicate when, after the partition 8 has been opened, liquid signalling medium (6) (upon opening before the freezing) or a small quantity of signalling medium which has thawed as a result of the opening being effected by eddy currents (opening after the freezing) enters into the space 17.

In order to facilitate the manufacture, the signalling medium may be inserted in a separate container, for example in the form of a capsule, into the indicator casing 1, 2, as in a construction illustrated by way of example in FIG. 3. The projecting edge 30 of the indicator is introduced into the package of frozen food 32 from the inside and secured in position by means of an adhesive 31. In this construction, the signalling medium is provided in a cavity 7 of the indicator. It will thus be understood that numerous modifications according to he invention, of which only a few can be shown in the drawings, may be developed.

The signalling medium 6 may consist of a liquid, for example in form of a self-dyeing staining solution or in the form of a colorless solution with dissolved reagents, which produces a color effect only upon combining with counter-reagents present in the signal space or in the signal body.

Liquid signalling media 6 of this kind may serve as coloring agents alone, or a substance (alcohol, glycerol, glycol, sodium chloride, calcium chloride or the like) for fixing the freezing or melting point at a predetermined temperature may be added thereto.

As illustrated in FIGS. 4 and 5, the signalling medium may also be of a pasty, dry cr pulverulent consistency, if the signal space 3 or one of the compartments of the indicator contains a liquid or a gel and the intermediate layer 10 is adjusted thereto. In this case, the signalling medium 6 which may consist of a dye powder or of reagents and, with the addition of a soluble binding agent, may be pressed to produce determined shapes (balls, pellets, tablets, or hollow bodies). If necessary, the signalling medium may be combined with the soluble intermediate layer. Furthermore, a gas-generating substance, similar to effervescing with the liquid supplied upon signalling.

An indicator of this construction is illustrated by way of example in FIG. 4. The indicator part turned towards the observer is the signal space 3 in which the signal becomes visible. The signal space 3 may be provided with an absorbent layer, for example blotting paper, diatomaceous earth, chalk or the like, or it may contain a liquid as illustrated in FIGS. 4, 5 and 6.

The degree of resistance offered by the intermediate layer 10 to the dissolving power of the thawed signalling medium can be proportioned, for example, by the addition of action of a substance, such as formalin, so that a desired, predeterminable time interval until the intermediate layer is dissolved by the thawed signalling medium 6 or the equivalent liquid in the signal space 3 is obtained, and a change in color in the signal space can be detected.

The signalling medium 6 in the indicator is provided in a container which may either form part of the indicator casing (FIGS. 1,4,5,6) or a separate loose container which is inserted into the indicator (FIGS, 3, 10, 11). It is in any case separate from the signal body 4.

The container for the signalling medium is opened before, during or after the freezing process manually, or by a mechanical device, or—without physical contact—by the action of electrical or magnetic fields by the formation of eddy currents, by supersonic sound, or by the focus of a source of radiation. Opening by the formation of eddy currents has been found to be particularly successful. The opening process may however, also proceed automatically during the freezing process if substances of variable thermal expansion are used, for example a synthetic resin against invar (FIG. 5), or by deformation, using for example bimetal for the container containing the signalling medium and the closure thereof (FIG. 6); in this case it is ensured that the opening of the container by the effect of cold is repeated,. The known utilization of expansion due to freezing for opening the container for the signalling medium is too unreliable, since so many factors which can be controlled only with difficulty, play a decisive part, as for example the temperature at which the signalling medium is introduced, the resilience of the container for the signalling medium, the degree to which the container is filled, the freezing velocity according to which ice crystals of completely different shapes and sizes are formed, and which may prevent repetition or uniformity of the opening of the container at a given temperature as required for series production, and so on.

Expansion due to freezing when used in addition to the elements according to the invention can at most have the effect of assisting the opening of the container for the signalling medium. In this case, the assisting effect can be improved by providing structural means according to hydraulic regularities, so that the relatively high freezing pressure along short paths is converted into a lower pressure along longer paths.

In utilizing the variable thermal expansion for the opening process, the container for the signalling medium 6 should be made of a material which is as rigid as possible or which becomes hard and brittle under the action of cold, or it may be caused by artificial means to shrink or to become brittle by thermal or chemical action. The container may, however, also consist of a separate elastic bag which is inserted into the indicator if, upon opening (for example by eddy current), the signalling medium 6 is to be ejected by the wall pressure after the thawing process.

Instead of using the bimetal 15 illustrated in FIG. 6 which is extended upon freezing and thus pierces the closure 8, an ordinary leaf spring, a toggle joint, or a synthetic resin needle may be used when the parts (15) adapted to pierce are extended by magnetic means, for example by an electromagnet 26, through an armature or keeper 27. The closure by which the container 5 for the signalling medium is sealed off from the signal space 3 may consist of a thin layer of material undergoing a change in structure at low temperatures. Thus, for example, a tin foil may be used which is provided with an addition of grey-tin modification, and which by the effect of cold is transformed completely into the grey modification, increases its volume, and becomes permeable to the liquid signalling medium 6.

As illustrated in FIG. 7, the signalling medium 6 may also be provided in an open container 5, advantageously provided with a device (a wick, a sievelike covering or the like) operating in the manner of a wick. Under the pressure applied by a spring 12, this container, upon contacting the intermediate layer 10, would cause the intermediate layer to be dissolved by the signalling medium 6 with resultant coloring of the signal body 4. During the freezing process, the container 5 is released by a mechanical device, for example a bimetallic hook 15, and is pressed by the spring 12 against the intermediate layer 10 which cannot, however, be dissolved until it has melted, since the signalling medium is incapable of reaction when it is in the frozen state.

Instead of the container 5 for the signalling medium being held at a distance from the signal body 4 and from the intermediate layer 10 by a mechanical stop, it may also be held in position by a gel 13, for example silica gel, water glass, or the like, as shown in FIG. 8, in which gel the container 5 for the signalling medium is anchored at normal temperatures and during the period of freezing. The gels referred to have the property of undergoing a structural conversion by the freezing process and thus after having rethawed cease to have the properties of gels and assume the properties of the liquids. For this reason, the anchorage of the container 5 for the signalling medium, which anchorage is reinforced by ribs of fins 14, is released after the gel has thawed, and the container then contacts the signal body 4 or the intermediate layer 10 forwardly thereof, the layer being dissolved when the signalling medium 6 has thawed.

The intermediate layer **10** is dissolved by the signalling medium **6** irrespective of the particular releasing process by which it is brought into contact with the layer, so that the resultant signal becomes visible on the signal body **4** in the signal space **3**. This signal may originate from the coloring signalling medium **6** being simply absorbed by an absorbent layer, or it may originate from a chemical reaction involving change of color when the signal body **4** or an equivalent liquid and the signalling medium **6** are impregnated with suitable reagents. An alarm reaction may also be obtained when the colored signal body **4** or parts thereof (for example characters or symbols) are bleached by the signalling medium **6**, in that the signal body **4** assumes a different color after the signalling.

The signal body permits of mainfold variations of signalling. When invisible symbols, characters or the like are printed on the signal body, for example white on white, such symbols will become visible as soon as the signal body **4** is caused by the signalling medium **6** to assume a different color at the unprinted positions. Similarly, visible symbols provided on the signal body **4** may disappear when such symbols are, for example red and the signal body assumes the same tone of color. Appearing and disappearing characters or symbols may be combined with permanently legible characters or symbols, for example black characters or symbols, as desired.

The nature of the signalling medium may be such that, when it penetrates into the signal layer by combining with a particular substance, there is released for example sodium carbonate, an acid, or a gas, such as carbon dioxide, by which part of the indicator casing **1** is inflated, so that the reading in the indicator is in addition perceptible with the aid of small, for example wartlike, projections which can be felt by touch by blind, ambylopic or color blind persons. As illustrated in FIGS. **1**, **4**, **5** and **6**, the indicator may, if necessary be so constructed that the discharge of the signalling medium **6** from the container **5** for the signalling medium and the contact with the intermediate layer in general are made visible by a preliminary signal. In one construction similar to those illustrated in FIGS. **3**, **10** and **11**, this preliminary signal can be produced by limiting a small section of the signal body **4** by means of an impregnation, no retarding intermediate layer being provided at that position, so that, when the container **5** for the signalling medium has been opened, a punctiform marking is produced by a minute portion of the signalling medium. While the preliminary signal may be of no particular importance to the consumer, it is extremely important to the frozen-food producer, since he is thereby enabled to detect the readiness of the indicator to produce a signal.

FIG. **9** shows by way of example one type of indicator, in which characters, symbols or the like of iron powder **19**, for example carbonyl iron, are formed by the action of a magnetic or electric device **26** on the signal body **4**, advantageously forwardly or at the back internally of the indicator casing, and fixed in the arranged order by application of the intermediate layer **10**. The liquid in form of a gel **13** is then introduced into the intermediate layer **10** until it has thawed, and changed its structure after the freezing process, as hereinbefore described, and assumes the properties of a liquid.

When the intermediate layer **10** has been dissolved by a liquefied gel **13**, the characters or symbols formed by magnetic action will disintegrate. Instead of applying an iron powder to produce the characters and symbols, such characters or symbols may consist of a material, for example a dye, which is soluble in water, so that they fade or are dissolved after the dissolution of the intermediate layer **10**.

It may be desirable or necessary for the length of time for which the cold chain has been interrupted as well as for the occurrence of a temperature rise in the goods to be protected, to be detected. For this reason, the signal body **4** provided in the construction illustrated in FIGS. **10** to **12** is so constructed as to enable it to record the time instead of or in addition to producing the usual reading. Indicators of this kind are based in the principle that in the operative state the indicator not only indicates by means of a color signal on the signal body **4** that a prescribed temperature has not been maintained but it indicates simultaneously that signalling medium **6** is absorbed along an additional, longer signal path **20**. A signal path of a determined length may be obtained, for example by providing it in the form of a spiral enclosing the signal body **4** proper. It may, however, also be of a rectilinear, undulating or zigzag shape; that is to say, it may have any desired shape. The rate at which the signalling medium is absorbed depends upon the absorption properties of the signal paths **20**, so that the length of time for which the indicator has operated results from the coloring distance covered.

The absorptivity of the signal paths **20** may be slowed down or accelerated by impregnation with a colloidal or strongly hygroscopic substance, so that the period of time for which the reading is required to last can be selected within wide limits.

The signal paths **20** are provided with a graduated scale **21** on which the time interval during which the temperature has deviated from a given temperature is indicated. A plurality of signal paths **20** which may, if desired, have various absorption velocities and, if necessary, may produce various colors, may be used simultaneously. Different colors may be produced by one and the same signalling medium **6** provided the signalling medium contains for example an iron salt, whereas the signal paths **20** are impregnated with a thiocyanate and potassium ferrocyanide, so that the recording of the time proceeds progressively on one path in red and on the other path in blue.

The manufacture may be simplified by using as the signal body **4**, for example a disc or the like which is absorbent throughout and which is changed by the application of a substance **22** by which its absorptive capacity is eliminated (for example by being printed with an oil color, a wax color, or the like) with resultant determination of the shape, width, length and course of the signal paths which retain their absorptive capacity. It will be understood that the signal paths **20** may also be stamped and filled with the absorbent material as illustrated in FIG. **11**.

The absorbent body may, for example, also be provided in the form of a device used for producing screen-printing stencils simply by filling the stencil with the absorbent material at the positions which remain permeable, unless the supporting fabric of the stencil is itself sufficient to act as an absorbent material by capillary action (in the manner of a wick).

A thin transparent or translucent flexible tube made, for example, of a synthetic resin, may be used which, having a suitable shape, for example the shape of a spiral, represents the signal paths **20** as a result of the capillary action. In addition, the capillary tube may be wetted or coated with a hygroscopic substance on the inside.

In order to avoid extraneous influences (drying up, moistening, or the like), the indicator is enclosed by a casing which is wholly or partially transparent or translucent and advantageously made airtight by means of an adhesive or by welding.

One preferred construction according to the invention, in which all aspects are taken into account, is diagrammatically illustrated by way of example in FIG. **13**. The section **2** of the casing assembled from two sections **1** and **2** is provided with a cavity **7** which contains a thin-walled, elastic, baglike container **5**. The container **5** is filled with the signalling medium **6** consisting of an aqueous color solution containing an addition of glysantine. The filled bag **5** is pressed into the cavity **7** by an insert **11** stamped out from a synthetic resin foil. The insert **11** contains a stamped-out disc of blotting paper **4** provided with a hole in the center and coated on its underside with a soluble layer **10** of glue slightly fermented with formalin.

The stamped cavity provided centrally of the insert **11** contains a window **16** for the preliminary signal, the window **16** containing also a small disc of blotting paper **4**, however, without the soluble layer **10**. Provided below the small disc **4** is a small ring **25** of thin wire which is heated for a very short period of time before, during or after the freezing process by being moved without physical contact past a coil **24** of an electric alternating field.

The transparent section **1** of the casing is provided above the insert **11** and is welded or glued at its edge to the section **2** of the casing. The edge, which may be provided, for example, with a self-adhesive coating, serves also for securing the indicator lightly to a package of frozen food on the inside.

The indicator may be produced at normal ambient temperature, stored as desired, and provided on the goods to be frozen. Before, during, and particularly after the freezing process, the goods are released by being moved on a conveyor belt past the coil of an electric alternating field of a suitable frequency, in which a locally limited section of the small metal wire **25** is heated by the formation of eddy currents, and the bag **5** is thus opened.

The small amount of signalling medium **6** temporarily melted by the opening process while the remainder remains frozen can now act upon the small area **4'** of the signal body **4**. This area is thus colored to indicate in the signal window that the indicator is released and thus ready to indicate impending temperature rises.

When the temperature rises above the melting point of the signalling medium **6**, which melting point is predetermined by the addition of gylsantine, the signalling medium becomes fluid and, under the wall pressure of the bag **5** and as a result of the capillary action, passes through the openings **18** to the intermediate layer **10** thus starting to dissolve it.

When a temperature rise is only a brief and negligible one and the goods still remain undamaged, the dissolution of the intermediate layer **10** is interrupted upon refreezing of the signalling medium. At the next temperature rise, the dissolving process will start at the same position at which it has previously been interrupted until the sum of several temperature rises which individually have been harmless, produces a signal in exactly the same manner as a single temperature rise of long duration when the intermediate layer **10** is dissolved and the signalling medium **6** is capable of penetrating into and coloring the signal area **4**. Signals of any color may be produced.

The coloring of the signal area is irreversible. As hereinbefore described, the signal area may be provided with characters or symbols of any combination which may appear or disappear at each signalling or which may be permanently visible. By using a signal area of a different kind, the indicator may also serve for signalling with time-recording without any alteration being required, so that it indicates not only the interruption of a cold chain, but in addition for how long the cold chain was interrupted from the moment at which the indicator started to operate.

Owing to the fact that the cavity **7** with the signalling medium **6** extends into the package of frozen food, it is in close contact with the frozen goods and thus highly insensitive to false alarm caused by extraneous influences.

We claim:

1. A system for indicating the thermal history of packaged deep-frozen goods comprising:

a first sheet formed with a transversely extending cavity;

a second sheet bonded to said first sheet over said cavity and transparent at least over said cavity to provide a signal window, said second sheet being provided in a wall of a frozen-goods package;

a body of signalling liquid in said cavity having a melting temperature above the deep-freeze temperature of said goods but below 0°C.

a liquid impermeable partition containing said body of liquid;

a flat reaction-inhibiting layer overlying said cavity between said sheets and lying in a plane transverse to the cavity but parallel to said sheets, said layer being composed of a material soluble in said liquid for retarding passage of same;

a flat signalling layer overlying said reaction-inhibiting layer between said sheets and being of a material capable of reacting with said liquid to produce a signal visible through the window of said second sheet; and

a spike having a pointed end adjacent and directed transversely to said first sheet toward said partition and capable of piercing said partition to permit the flow of melted signal liquid therethrough the other end of said spike, bearing on one of said layers, whereby piercing of said partition by said spike activates said system.

2. A system for indicating the thermal history of deep-frozen goods comprising:

a receptacle attached to said goods;

a component in said receptacle having a melting temperature above the deep-freeze temperature of said goods;

an adsorbent component in said receptacle capable of reacting with the first-mentioned component to produce a visible indication;

an impermeable meltable partition separating said components in said receptacle;

a spiked metallic body in engagement with said partition; and

means adjacent the metallic body for generating an alternating-current electric field and therewith including eddy currents in said body to heat same and thereby melt and opening in said partition whereby formation of said opening activates said system.

3. The system defined in claim **2**, further comprising:

a reaction-inhibiting layer adjacent said partition and composed of a material soluble in said first component for retarding passage of same.

4. A system for indicating the thermal history of deep-frozen goods comprising:

a receptacle attached to said goods;

a component in said receptacle having a melting temperature above the deep-freeze temperature of said goods;

an adsorbent component in said receptacle capable of reacting with the other component to produce a visible indication;

an impermeable meltable partition separating said components in said receptacle;

a reaction-inhibiting layer between said partition and said adsorbent component and composed of a material soluble in said other component in the liquid form thereof for retarding passage of the same;

a spiked metallic body in engagement with said partition, said layer being interrupted adjacent said body; and

means adjacent the metallic body for generating an alternating-current electric field and therewith inducing eddy currents in said body to heat same and thereby melt an opening into said partition, whereby formation of said opening activates said system and create visible indication only adjacent said body.

5. A system for indicating the thermal history of deep-frozen goods comprising:

a receptacle attached to said goods;

a liquid component in said receptacle having a melting temperature above the deep-freeze temperature of said goods but below 0°C.

an adsorbent component in said receptacle capable of reacting with said liquid component to produce a visible indication;

an impermeable metal partition separating said components in said receptacle;

a reaction-inhibiting layer between said partition and said adsorbent component and composed of a material soluble in said liquid component in the liquid form thereof for retarding passage of same and reaction of same with said adsorbent component, said layer being interrupted adjacent a limited portion of said adsorbent component; and

a spiked metal body juxtapositioned with said partition and adapted to pierce the same upon movement there against for activating said system and creating a visible indication only at said portion.

* * * * *