May 18, 1948. H. L. SCHROEDER 2,441,721

BRACKET SUPPORT FOR METAL SHELVES

Filed Aug. 27, 1946

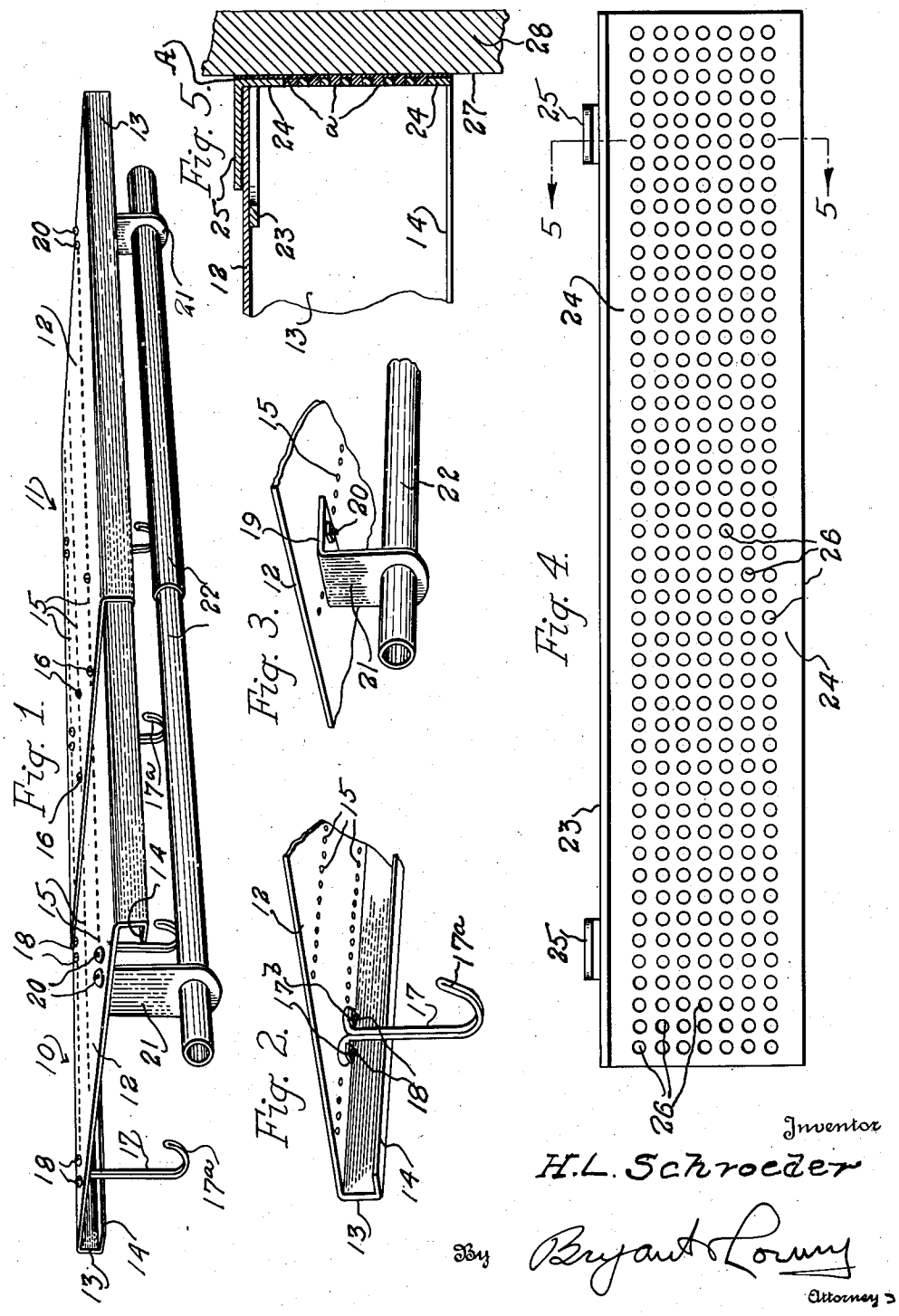

Patented May 18, 1948 2,441,721

UNITED STATES PATENT OFFICE

2,441,721

BRACKET SUPPORT FOR METAL SHELVES

Henry L. Schroeder, Chicago, Ill.

Application August 27, 1946, Serial No. 693,259

4 Claims. (Cl. 211—90)

1

This invention relates to certain new and useful improvements in bracket supports for metal shelves.

The primary object of the invention is to provide a bracket support for metal shelves wherein the shelf is of an extensible character, permitting a shelf construction of standard length to be adjustable to accommodate mounting of the shelf on spaced walls, the distances between which may vary within the limits of the extensibility of the shelf.

A further object of the invention is to provide a bracket support for metal shelves wherein the bracket that is of angle formation has one side angle portion thereof constructed and arranged for adhesive binding to an associated wall with the other angle portion of the bracket constructed for an interfitting connection with the adjacent end of a shelf, the latter being formed of extensible sections with means for restraining relative movements therebetween when the shelf is in setup condition.

A still further object of the invention is to provide a bracket and shelf construction of the foregoing character wherein the overlapping extensible sections of the shelf are provided with spaced parallel rows of perforations, with said perforations through the medium of nut and bolt combinations or the like facilitating the mounting of supporting hooks or hangers.

A still further object of the invention is to provide a bracket support and shelf construction, such as described, with angle iron brackets dependingly supported on the shelf with the depending perpendicular legs of the angle brackets having an extensible rod mounted therein for the support of articles thereon.

With the above and other objects in view that will become apparent as the nature of the invention is better understood, the same consists in the novel form, combination and arrangement of parts hereinafter more fully described, shown in the accompanying drawing, and claimed.

In the drawing:

Figure 1 is a perspective view showing the extensible shelf construction separate and apart from the bracket supports therefor,

Figure 2 is a fragmentary perspective view of one end of the shelf, showing spaced rows of openings in the flat wall portion thereof to facilitate the mounting of a garment supporting hook or the like,

Figure 3 is a fragmentary perspective view of the shelf section with an angle bracket secured

2

to the underside thereof for the support of a hanger rod below the shelf,

Figure 4 is a side elevational view of the bracket support for the shelf, showing lugs struck up from the top horizontal wall thereof and with the vertical wall of the bracket perforated over the entire area thereof, and

Figure 5 is a detail sectional view taken on line 5—5 of Figure 4 and further illustrating the mounting of one end of the shelf on the bracket with the latter adhesively secured to the wall.

Referring more in detail to the accompanying drawing and particularly to Figures 1 and 2 which shows more clearly the shelf construction, it is to be noted that the shelf may be formed from any suitable material desired, such as metal or plastics, sheet metal being preferably employed with the shelf primarily designed for clothes closet use, although the same be employed in any connection desired, such as in kitchen or pantry shelves, or the like. The shelf is generally of channel formation and is preferably formed of two sections interfitting with each other and overlapping at their adjacent ends so that the shelf may be adjusted to accommodate its length to the mounting on opposite walls of an enclosure, such as a clothes closet or the like.

In the present instance, the extensible shelf is formed of two sections designated in general by the reference characters 10 and 11 and each section comprises a flat horizontal wall 12 having depending side wall portions 13 that have their lower ends provided with inturned and relatively short horizontal flanges 14, the section 11 being dimensioned relative to the section 10 as to have telescoping relation with said section 10 as illustrated in Figure 1. Each of the walls 12 of the two shelf sections 10 and 11 is provided with spaced parallel rows of perforations or relatively small openings 15 with the rows of openings 15 in the two sections alining and to maintain the two sections 10 and 11 in their adjusted set-up condition, nut and bolt combinations 16, preferably four in number as illustrated in Figure 1, are associated with selected openings adjacent the overlapped ends of the shelf sections 10 and 11.

Hooks or the like 17 for garment hangers or for the support of other articles are dependingly supported from the walls 12 of the shelf sections and, as illustrated in Figures 1 and 2, such hooks or supports are preferably formed from a strand of wire bent upon itself to provide a hook end 17^a and eyelet ends 17^b, with said eyelet ends associated with a pair of selected openings 15 and retained in position on the wall 12 through

the medium of nut and bolt combinations 18.

In addition to the hook supports 17, it is proposed to suspend a rod support or hanger from the shelf and as shown in Figures 1 and 3 angle supports have the horizontal legs 19 thereof secured to the undersides of the walls 12 by nut and bolt combinations 20 passing through said horizontal legs and selected openings 15, while the depending perpendicular leg 21 of angle supports that are arranged in spaced relation preferably adjacent the outer ends of the shelf sections 10 and 11, have openings therein for the reception of an extensible rod formed of telescoping sections 22, permitting variance in length thereof.

An important feature of the present invention resides in the particular type of bracket support for the extensible shelf and the manner of mounting the bracket on a wall or like support, and as illustrated in Figures 4 and 5, the bracket support for the shelf is of angle formation and includes an upper horizontal bracket wall 23 carrying at one edge thereof a depending perpendicular wall 24. At least two lugs 25 are struck up from the horizontal bracket wall 23 to lie parallel with said wall and in a plane above said wall, the end of the lug 25 engaged with the angle bracket being substantially in the plane of the perpendicular bracket wall 24 as illustrated in Figure 5. The perpendicular bracket wall 24, as illustrated in Figure 4, is provided over the entire area thereof with a multiplicity of relatively small perforations or openings 26 for purposes presently to appear.

In the mounting of the bracket support and its associated shelf construction, the bracket supports are first located for wall mounting and, as shown in Figure 5, a cement, adhesive or other suitable binder is placed in a coat on the outer side of the perforated perpendicular bracket wall 24 or on the face 27 of the mounting wall 28, the adhesive being indicated in Figure 5 by the reference character A, and when said angle bracket support is firmly pressed against the face of the wall 28, the adhesive is exuded into the wall openings 26 as at *a* and when said adhesive sets, a permanent interlocking binding connection is established between the wall 28 and the angle bracket support.

With the bracket supports so mounted and it being understood that the nut and bolt combinations 16 are disengaged from the shelf sections 10 and 11 so that said sections are freely relatively movable, the outer ends of the shelf sections 10 and 11 are then placed for support on the horizontal bracket walls 23 of the bracket supports, with said outer ends disposed beneath the struck up lugs 25 as illustrated in Figure 5, the opposite side edge wall portions 13 extending over opposite ends of the angle brackets to restrain transversely sliding movements of the shelf sections longitudinally of the bracket supports. With the shelf sections 10 and 11 positioned as illustrated by one end in Figure 5, the nut and bolt combinations 16 are then assembled with the

walls 12 to restrain relatively sliding movements between the shelf sections 10 and 11. It will be understood that the hanger hooks 17 may be selectively disposed and in the number desired in depending relation to the shelf sections in view of the arrangement of openings 15 in the walls 12.

While there is herein shown and described the preferred embodiment of the invention, it is nevertheless to be understood that minor changes may be made therein without departing from the spirit and scope of the invention as claimed.

I claim:

1. In a bracket support and shelf construction of the character described, angle brackets having perforate vertical attaching walls and inwardly directed horizontal shelf supporting walls, a shelf disposed upon said shelf supporting walls, and vertically spaced inwardly extending lugs struck from said shelf supporting walls extending parallel thereto and adapted to overlie and engage the upper surface of said shelf.

2. In a bracket support and shelf construction of the character described, angle brackets having perforate vertical attaching walls and inwardly directed horizontal shelf supporting walls, adhesive in the perforations in said perforate vertical attaching walls for securing the same to desired surfaces, a shelf disposed upon said shelf supporting walls, and vertically spaced inwardly extending lugs struck from said shelf supporting walls extending parallel thereto and adapted to overlie and engage the upper surface of said shelf.

3. The subject matter as claimed in claim 3, said shelf comprising telescoping sections having alignable openings formed through each section, and garment supporting means having attached means secured to said shelf sections and extending through said aligned openings for holding said shelf sections in their extended and adjusted position within said bracket supports.

4. The subject matter as claimed in claim 3, said shelf comprising telescoping sections having alignable openings formed through each section, and telescopic garment supporting means having attaching means secured to said shelf sections and extending through said aligned openings for holding said shelf sections in their extended and adjusted position within said bracket supports.

HENRY L. SCHROEDER.

REFERENCES CITED

The following references are of record in the file of this patent:

UNITED STATES PATENTS

Number	Name	Date
435,877	Yawman	Sept. 2, 1890
1,090,724	Koehler	Mar. 17, 1914
1,851,965	Bartholomae et al.	Apr. 5, 1932
2,226,274	Schroeder	Dec. 16, 1941
2,227,924	Bunch	Jan. 7, 1941
2,385,296	Moore	Sept. 18, 1945

Certificate of Correction

Patent No. 2,441,721. May 18, 1948.

HENRY L. SCHROEDER

It is hereby certified that errors appear in the printed specification of the above numbered patent requiring correction as follows: Column 4, lines 34 and 42, for the claim reference numeral "3" read *2*; and that the said Letters Patent should be read with these corrections therein that the same may conform to the record of the case in the Patent Office.

Signed and sealed this 13th day of July, A. D. 1948.

[SEAL]

THOMAS F. MURPHY,
Assistant Commissioner of Patents.