(Model.)

4 Sheets—Sheet 1.

G. J. & S. J. SHIMER.

Car Axle Lubricator.

No. 238,813. Patented March 15, 1881.

Fig. 1.

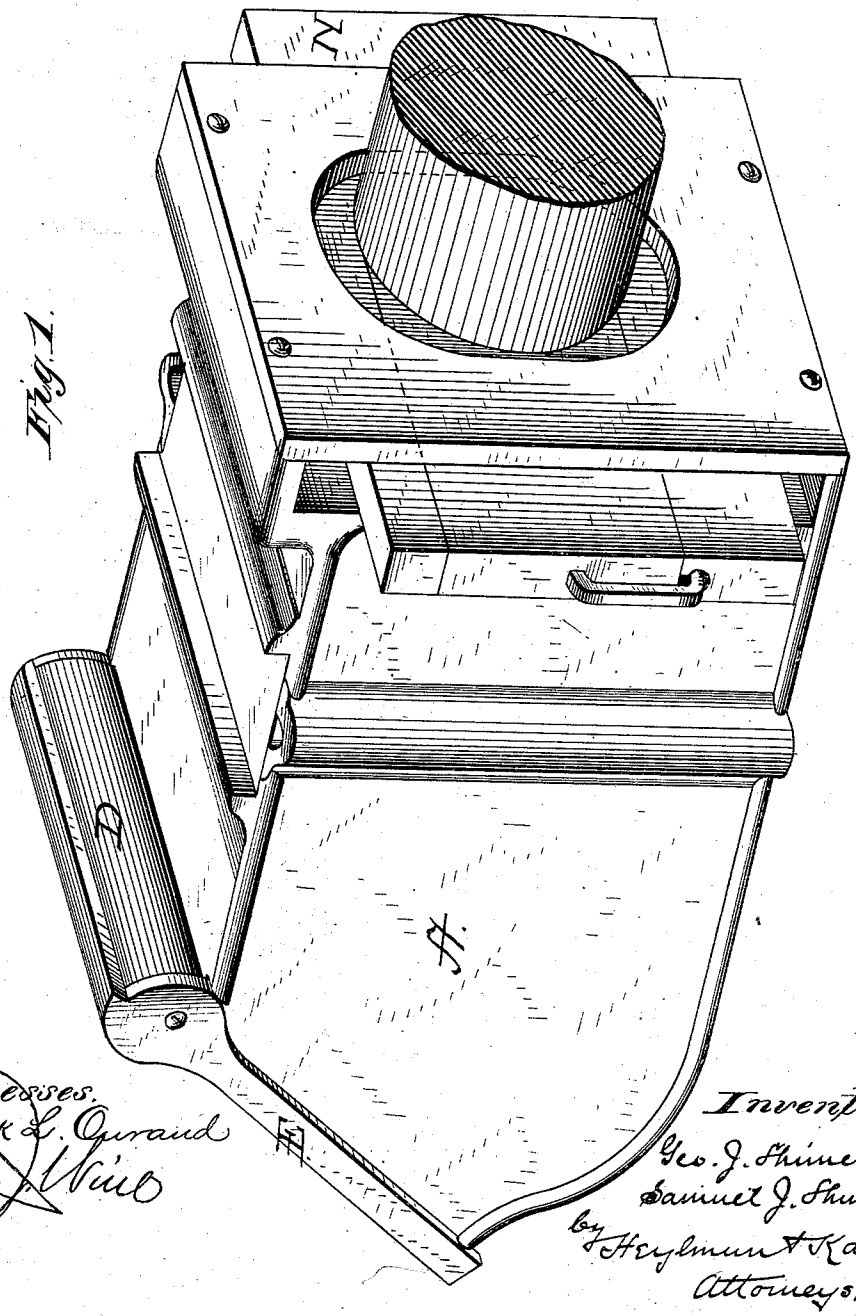

Witnesses.
Franck L. Durand
M. J. Wilcox

Inventors
Geo. J. Shimer,
Samuel J. Shimer,
by Heylmun & Kane
Attorneys.

N. PETERS, PHOTO-LITHOGRAPHER, WASHINGTON, D. C.

(Model.) 4 Sheets—Sheet 2.

G. J. & S. J. SHIMER.

Car Axle Lubricator.

No. 238,813. **Patented March 15, 1881.**

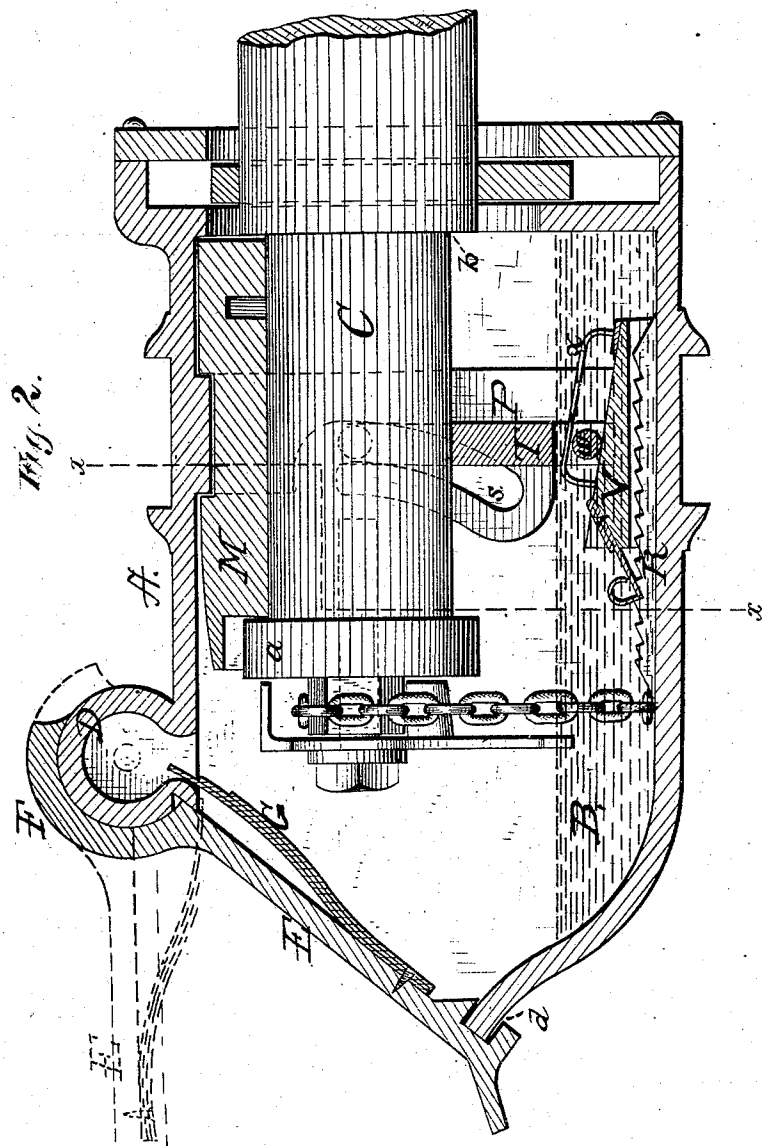

Witnesses.
F. L. Ourand
M. J. Wilcox

Inventors
Geo. J. Shimer,
Samuel J. Shimer,
by Keylmun & Kane
Attorneys.

N. PETERS, PHOTO-LITHOGRAPHER, WASHINGTON, D. C.

(Model.) 4 Sheets—Sheet 3.

G. J. & S. J. SHIMER.

Car Axle Lubricator.

No. 238,813. **Patented March 15, 188 .**

Fig. 3.

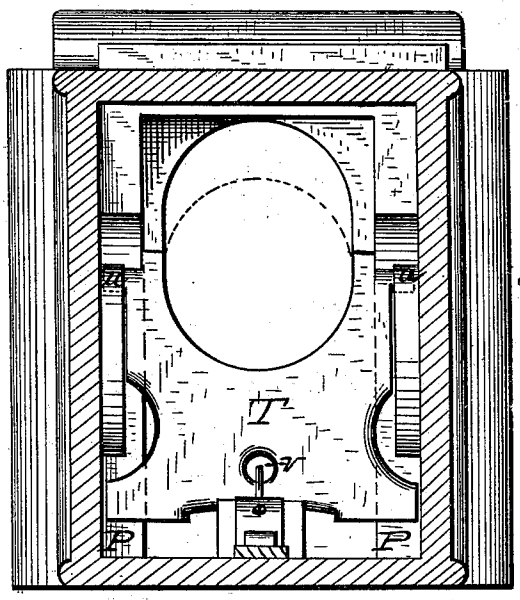

Fig. 4.

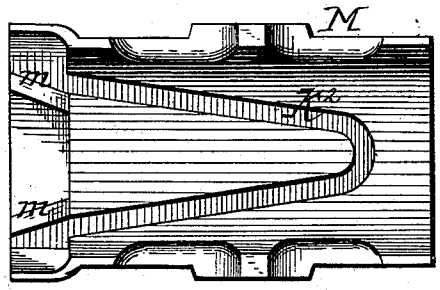

Fig. 5.

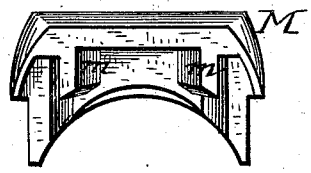

Witnesses,
F. L. Ouyard
M. J. Naul

Inventors
Geo. J. Shimer
Samuel J. Shimer
by Heylmun & Kane,
Attorneys,

N. PETERS, PHOTO-LITHOGRAPHER, WASHINGTON, D. C.

(Model.) 4 Sheets—Sheet 4.

G. J. & S. J. SHIMER.

Car Axle Lubricator.

No. 238,813. **Patented March 15, 1881.**

Fig. 6.

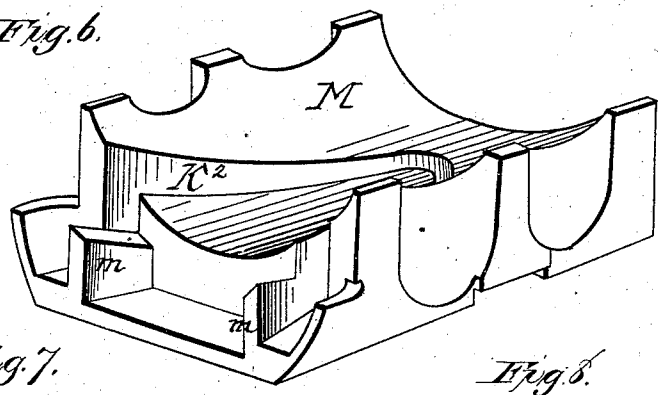

Fig. 7.

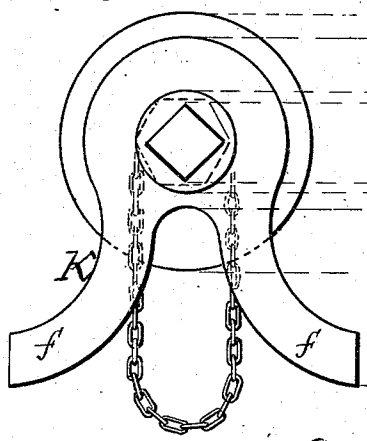

Fig. 8.

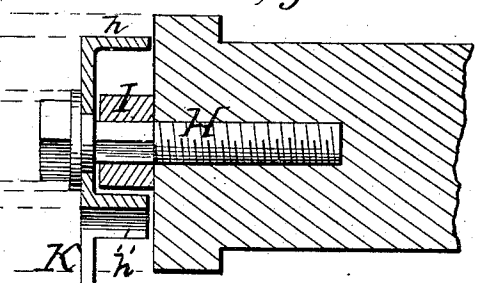

Fig. 9.

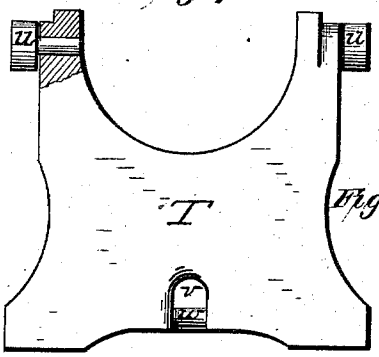

Fig. 10.

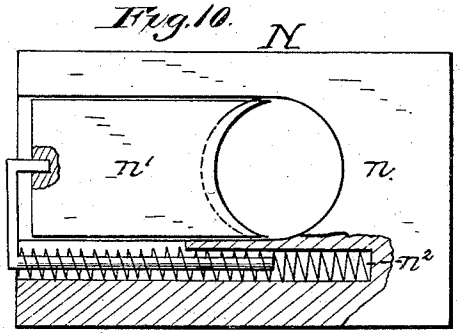

Fig. 11.

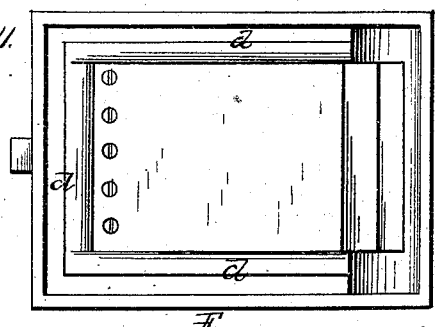

Fig. 12.

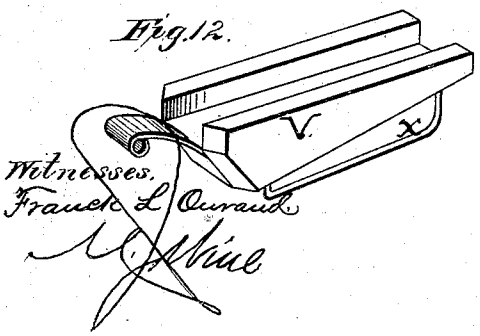

Witnesses.
Francis L. Durand
M. J. Shimer

Inventors
Geo. J. Shimer
Samuel J. Shimer
by Hyslop & Kane.
Attorneys.

N. PETERS, PHOTO-LITHOGRAPHER, WASHINGTON, D. C.

UNITED STATES PATENT OFFICE.

GEORGE J. SHIMER AND SAMUEL J. SHIMER, OF MILTON, PENNSYLVANIA.

CAR-AXLE LUBRICATOR.

SPECIFICATION forming part of Letters Patent No. 238,813, dated March 15, 1881.

Application filed January 19, 1881. (Model.)

To all whom it may concern:

Be it known that we, GEORGE J. SHIMER and SAMUEL J. SHIMER, citizens of the United States, residing at Milton, in the county of Northumberland and State of Pennsylvania, have invented certain new and useful Improvements in Car-Axle Lubricators; and we do hereby declare the following to be a full, clear, and exact description of the invention, such as will enable others skilled in the art to which it appertains to make and use the same, reference being had to the accompanying drawings, and to letters or figures of reference marked thereon, which form a part of this specification.

Our invention consists in a brass or journal-bearing having a V-shaped or U-shaped oil-groove or channel, with induction and eduction passages for the lubricant at the same end, thus causing a continuous flow of oil to the surface of the journal and returning the surplus or unused oil to the oil-well below at the same end, but on the opposite side, of the brass at which it entered.

Our improvement further consists, in combination with a revolving journal carrying an endless chain at its outer end for elevating oil from a well below, of a brass or journal-bearing having a V-shaped or U-shaped groove or channel for receiving the oil raised by the chain, feeding the same to the journal, and discharging the surplus or unused oil at the end, but on the opposite side, of the brass at which it entered.

Our improvement further consists, in combination with a car-axle journal and its endless chain suspended at the end thereof, of the counterpoised washer loosely suspended from the end of the journal, provided with three arms, two of which fit against the interior side walls of the box to prevent the washer from turning with the axle, and the upper arm bent inwardly against the end of the journal to prevent the chain from jumping or riding off its support.

Our improvement further consists, in combination with a car-axle journal and its upper brass or journal-bearing, of a movable supporting-plate for maintaining the journal and brass in position and preventing the journal from leaving its brass whenever the car is subjected to any sudden jar.

Our improvement further consists, in combination with a car-axle journal and its upper brass or journal-bearing, of an adjustable plate and an adjusting-wedge, whereby the plate adapted to hold the brass in place and to fit under the journal loosely is adjusted and locked in position through the medium of the wedge.

Our improvement further consists in the combination, with the box having side cheek-pieces provided with inclined or curved slots, of the adjustable plate having opposite side journals engaging with the slots of the cheek-pieces and the adjusting-wedge.

Our improvement further consists, in combination with a car-box formed with a hollow circular hinge-pintle, of a cover or lid provided with a flat spring, one end of which works into the space of the hinge-pintle.

Our improvement further consists in the novel construction and combination of parts, as will be hereinafter more fully set forth and specifically claimed.

Figure 1 is an isometrical projection of our improved car-axle box. Fig. 2 is a longitudinal sectional view of the box, cover, brass washer supporting plate, and wedge, and the outer parts in full lines. Fig. 3 is a transverse sectional view taken through the line *x x* of Fig. 2. Fig. 4 is a bottom or under side view of the brass or journal-bearing, showing the V-shaped or U-shaped groove or channel. Fig. 5 is a front end view of the brass or journal-bearing, showing the induction and eduction passages. Fig. 6 is a perspective view of the journal-bearing or brass. Fig. 7 is a front end view of the journal with the counterpoised washer and chain. Fig. 8 is a longitudinal sectional view taken through the line *z z* of Fig. 7, with the chain omitted. Fig. 9 is a front or face view of the supporting-plate. Fig. 10 is a face view of the sectional washer for the axle. Fig. 11 is a view of the cover or lid, showing the groove on the under side and the flat spring. Fig. 12 is a perspective view of the adjusting-wedge.

In the annexed drawings, forming a part of this specification, the letter A represents the car-axle box, having an oil well or chamber, B, and C is the journal of a car-axle, having a collar, *a*, at its outer end and a shoulder, *b*, at its inner end.

The box A (see Fig. 1) is formed with side lugs to receive the connecting-bolts, and formed with recesses at the top and bottom to receive the stirrup-straps; and it is also provided at the rear end with a removable plate for securing in position the sectional washer located in the space surrounding the axle. The upper forward end of the box is formed with a raised curved projection, D, made hollow, constituting the pintle portion of a hinge. To the closed ends of this hollow pintle D is pivotally attached, so as to work on an axis, the cover or lid E, formed with a raised curved projection, F, constituting the knuckle portion of a hinge. The cover E is provided on its under side with one or more flat spring-leaves, G, the free ends of which fit and work into the hollow space of the pintle D, as seen in Fig. 2 of the drawings. The offices of this spring are to hold up the cover when open and closed when down. This cover or lid is also formed on the under side with two side and one end groove, *d*, so as to fit over the sides and lower end of the mouth portion of the box, substantially as shown in Fig. 2 of the drawings. By this construction of the hinge-connection for the cover or lid no joint is exposed to admit dust and foreign matter, and the free end of the spring is permitted to pass within the hollow cylindrical space of the pintle, and the surrounding groove on three sides of the cover excludes the dust and sandy particles from working between the joints and mingling with the oil, to the injury of the brass and journal.

The outer end of the journal C, (see Figs. 7 and 8,) at the center, is screw-threaded to receive a screw-threaded bolt, H, carrying an octagon-shaped (or other shape except round) nut, I, or its equivalent, and a loosely-suspended counterpoised washer, K. The nut is intended to rotate with the journal, so as to communicate a positive motion to the endless chain suspended therefrom. This suspended chain is guarded from outward displacement and "riding" upon the journal by means of the washer K, the construction of which is about to be described.

The washer K, (see Figs. 7 and 8,) suspended from the bolt of the journal, maintains a vertical position, and is provided with two forked limbs, *f f*, to engage with the interior sides of the box, so as to prevent the possible turning of the washer with the axle, and the upper arm, *h*, is turned inwardly at right angles, or nearly so, as seen in Figs. 2 and 8, to prevent the chain from jumping or riding off its support. This washer is also provided centrally with an inner projection, *h'*, which takes its position immediately below the pulley I, upon which the chain passes, and serves the object to keep the suspended chain apart to prevent its entanglement and wrapping around the pulley.

The letter M represents (see Figs. 2, 4, 5, and 6) the brass or journal-bearing arranged over the journal within the car-box, substantially in the usual manner. This brass or journal-bearing is formed on the curved bearing side with a V-shaped or U-shaped groove or channel, K^2, for conducting the lubricant oil elevated by the chain forwardly and backwardly over the surface of the journal and discharging the surplus or unused lubricant to the oil-well below at the same end, but on the opposite side, of the brass at which it centered. It will thus be seen that one branch of this V-shaped or U-shaped groove or channel serves as an induction-passage for feeding the lubricant to the journal, and the other branch as the eduction-passage for returning the surplus oil to the forward or front end of the journal and discharging the unused portion into the oil-well below. The oil raised by the elevating-chain during the revolution of the axle is directed from the collar of the journal by one of the projections, scrapers, or wipers, *m*, located at the forward end of the brass, and conducts the oil to the induction-passage of the V-shaped or U-shaped groove, and by the upward motion of the journal and the upward inclination of the induction-passage of the groove or channel upon the elevating side of the journal the oil is caused to traverse the channel quickly to the rear end of the brass, where it crosses over, and the order of the feed is reversed, and, the motion of the journal on this side being downward and the channel having a downward inclination, the oil is likewise quickly returned to the forward or front of the journal and the unused portion of the oil discharged to the oil-well below.

The advantages of constructing the brass or journal-bearing with a continuous groove or channel are, the quick feed and discharge of the lubricant oil, and to avoid the accumulation of the lubricant on the side of the journal having the upward motion; otherwise it would find its way rearwardly to the car-wheel and be lost.

The letter N represents (see Fig. 10) a washer composed of two parts, *n n'*, having semicircular openings to fit the axle, and a spring-adjustment, n^2, for automatically taking up the wear and adjusting the parts closely around the axle. The part *n* of the washer is provided with two arms, the lower one of which is provided with a concealed coil-spring attached to a bent rod, the latter engaging with the movable part *n'* of the washer for taking up the wear and maintaining the close fit of the sectional washer around the axle, substantially as seen in Fig. 1 of the drawings. This sectional washer is arranged in the partitioned space, with side openings located at the rear end of the car-box, and can be readily removed or replaced without changing any other part pertaining to the car-box. This sectional washer closes the rear end of the box and keeps out the sandy particles and dust that are raised from the road by the passing train of cars.

It very often occurs, in running cars over switches, that they are subjected to a sudden jar, which causes occasionally the brass or journal-bearing to jump from its socket, and the parts

become disarranged. To overcome this difficulty we provide, by casting or otherwise, the inner sides of the box with cheek-pieces P, having inclined or curved slots *s* extending outwardly in the direction of the front portion of the box, as seen in Fig. 2, and the bottom wall of the box with a ratchet or serrated bar, R. To the cheek-pieces P is journaled a plate or support, T, having at the upper end, on opposite sides, a fixed or loose journal, *u*, adapted to work or slide in the slots of the said cheek-pieces in the adjustment of the plate. The lower middle portion of this plate is formed with a slot, *v*, and bar *w*, to receive and admit of the sliding motion of the loop *x*, attached to the upper surface of the wedge V, straddling the ratchet-bar. The forward end of this wedge is provided with a spring-detent to engage with the teeth of the ratchet-bar, as seen in Fig. 2, to retain the wedge and its support in a locked position. The upper end of the support or plate T is curved in such a manner as to fit the under side of the journal, and the side extended portions thereof rest under the sides of the brass or bearing, which firmly holds the same in position, as indicated substantially in Fig. 3 of the drawings. This plate or support, when adjusted in a vertical position through the instrumentality of the wedge, bears lightly, if at all, against the under side of the journal, and whenever the car is subjected to jar prevents any material play of the journal, and at the same time secures the bearing in its place of rest.

To remove the support from the under side of the brass or bearing a hook or rod is inserted in the eye of the spring, and by an upward pressure the spring is released from the engaging tooth, and by drawing the wedge forward the hook thereof will engage with the bar *w*, which, in return, will cause the journals of the support to recede in the slots of the cheek-pieces until they reach the bottom of the same, in which condition the brass may be removed and a new one inserted, after which the support is adjusted in the manner as hereinbefore stated to maintain the relative positions of the journal and brass. In the backward motion of the axle-journal the feed of the lubricant will be the same as in the forward motion.

The sectional washer may be made of wood or other soft material. The support for the brass arranged in the box under the journal in practice is made of metal; also, the cheek-pieces are preferably cast with the sides of the box, constituting a part thereof.

We also claim the right to vary the construction of the parts without departing from the spirit of our invention.

We reserve the right to make a separate application for the method of lubricating journals and saving the unused lubricant, as herein described.

Having thus described our invention, what we claim as new, and desire to secure by Letters Patent, is—

1. A journal-bearing or brass having a V-shaped or U-shaped oil groove or channel extending in the direction of the length of a journal, for the purposes hereinbefore stated.

2. The journal-bearing or brass having the V-shaped or U-shaped oil groove or channel extending in the direction of the length of a journal and the scrapers or wipers, for the purposes hereinbefore stated.

3. In combination with a revolving journal carrying an endless chain at its outer end for elevating oil from a well below, a journal-bearing or brass having a V-shaped or U-shaped groove or channel for receiving the oil raised by the chain, feeding the same to the journal, and discharging the unused oil at the same end, but opposite side, of the brass at which it entered, substantially as described.

4. The combination, with a revolving car-axle journal and its endless chain suspended at the end thereof, of a counterpoised washer loosely suspended at the outer end of the journal, outside of the chain, and provided with a bent arm for preventing the chain from riding off its seat, substantially as described.

5. The combination, with a car-axle-box and a revolving journal and its endless chain suspended at the end thereof, of a washer loosely suspended at the outer end of the journal, outside of the chain, provided with two side arms that meet the side walls of the box to prevent it from turning with the axle, and having a bent arm that meets the front face of the car-axle collar to prevent the chain from riding off its seat, substantially as described.

6. The combination, with a car-axle box and a revolving car-axle journal, with its endless chain suspended at the end thereof, of the counterpoised washer loosely suspended at the outer end of the journal, outside of the suspended chain, and provided with three arms, the upper one being bent inwardly for preventing the chain from riding off its seat and the washer from turning within the box, substantially as described.

7. The combination, with a revolving car-axle journal, with its endless chain suspended at the end thereof, of a washer pivotally attached at the center of the end of the car-axle journal, outside the chain, and provided with an inner projection arranged below the axis of rotation to prevent the entanglement of the chain, substantially as described.

8. A washer for a car-axle box having three arms, the upper one being bent or turned inwardly and the lower ones turned outwardly, forked, and fashioned substantially as described, and for the purposes set forth.

9. A car-axle box having interior side curved or inclined slots, for the purpose stated.

10. A car-axle box having interior side cheek-pieces provided with curved or inclined slots, and a ratchet or serrated bar attached to the bottom, substantially as and for the purposes set forth.

11. In combination with a car-axle box, a

journal, and a brass, a vertical plate or support with upper side bearing-edges resting under the brass, for maintaining the brass in position and preventing the journal from leaving its brass whenever the car is subjected to a sudden jar, substantially as described.

12. In combination with a car-axle box having interior side cheek-pieces provided with curved or inclined slots, a journal, and a brass, a movable plate or support with side journals to engage with the slots of the cheek-pieces, for the purposes hereinbefore described.

13. In combination with a car-axle box having interior side cheek-pieces provided with curved or inclined slots, a journal, and a brass, a movable plate or support with side journals to engage with the slots of the cheek-pieces and an adjusting-wedge, for the purposes hereinbefore described.

14. In combination with a car-axle box having interior side cheek-pieces provided with curved or inclined slots and the bottom ratchet-bar, a journal, and a brass, a movable support with side journals to engage with the slots of the cheek-pieces and a wedge provided with a spring-detent to engage with the ratchet-teeth of the ratchet-bar, substantially as described.

15. The combination, with a car-axle box having interior side cheek-pieces provided with curved or inclined slots and a ratchet-bar attached to the floor, of a journal, a brass, a movable support, and a wedge provided with a loop or staple engaging with the lower end of the movable support for the purpose of withdrawing the support from the under side of the journal to permit the removal of the brass.

16. In a car-axle box, the combination of a movable support and an adjusting-wedge, coupled together for operation as described.

17. The combination of a car-axle box having at its rear end a partitioned-off space with side openings, and the sectional washer N, composed of the two parts $n\,n'$ and the spring-adjusting means n^2, whereby the sections composing the washer can be withdrawn from the axle and box on opposite sides, substantially as and for the purposes set forth.

18. A car-axle box constructed at its upper forward end with the hollow raised curved projection D, extending nearly from side to side of the car-axle box, and constituting a pintle for a hinge-connection, substantially as described.

19. The combination of a car-axle box having at its upper forward end a raised hollow pintle, and a cover or lid having a knuckle fitting over the raised pintle, and a leaf-spring the free end of which enters the space of the pintle, substantially as described.

In testimony whereof we affix our signatures in presence of two witnesses.

GEO. J. SHIMER.
SAMUEL J. SHIMER.

Witnesses:
J. F. GAUGER,
LOUIS C. THOMAS.