(No Model.)

R. F. CROSBIE.

WRENCH.

No. 590,363. Patented Sept. 21, 1897.

FIG. 1.

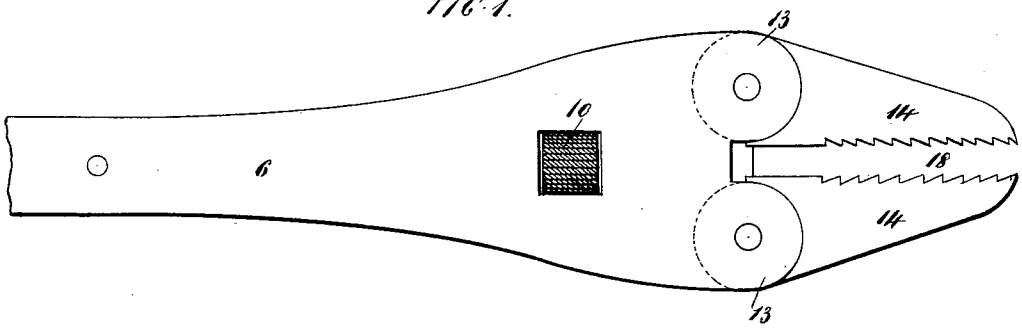

FIG. 2.

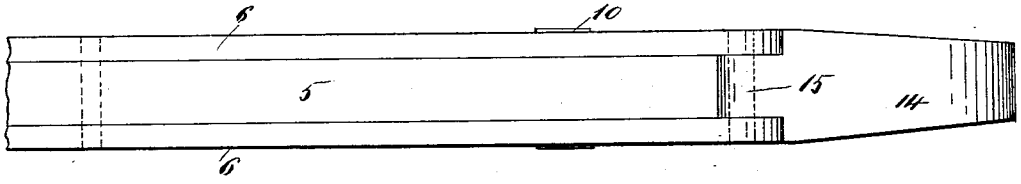

FIG. 3.

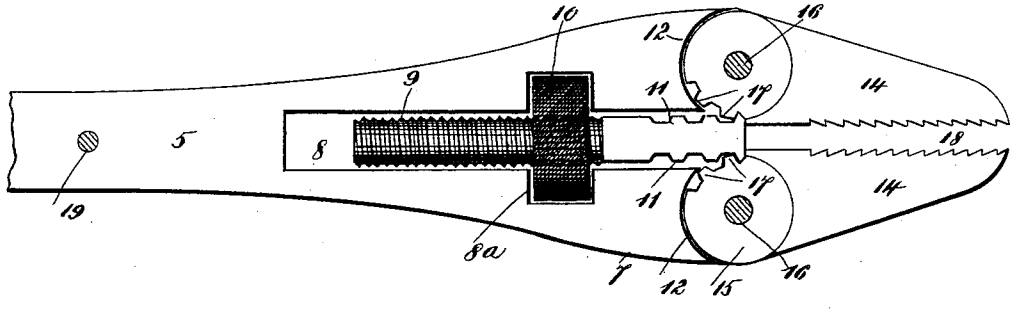

WITNESSES:
John Buckler,
C. Gerst

INVENTOR,
Robert Foote Crosbie.
BY
Edgar Tate & Co.
ATTORNEYS

THE NORRIS PETERS CO., PHOTO-LITHO., WASHINGTON, D. C.

UNITED STATES PATENT OFFICE.

ROBERT FOOTE CROSBIE, OF PRIMGHAR, IOWA.

WRENCH.

SPECIFICATION forming part of Letters Patent No. 590,363, dated September 21, 1897.

Application filed June 19, 1897. Serial No. 641,465. (No model.)

To all whom it may concern:

Be it known that I, ROBERT FOOTE CROSBIE, a citizen of the United States, residing at Primghar, in the county of O'Brien and State of Iowa, have invented certain new and useful Improvements in Wrenches, of which the following is a full and complete specification, such as will enable those skilled in the art to which it appertains to make and use the same.

This invention relates to wrenches; and the object thereof is to provide an improved device of this class which consists of a suitable handle, pivoted jaws connected therewith and provided with circular heads, and a longitudinally-movable rack-bar mounted in said handle and adapted to operate in connection with ratchet-teeth formed on said circular heads, so as to open and close said jaws.

The invention is fully disclosed in the following specification, of which the accompanying drawings form a part, in which—

Figure 1 is a plan view of my improved wrench; Fig. 2, a side view thereof; and Fig. 3, a view similar to Fig. 1, one of the side plates of the handle being detached.

In the drawings forming part of this specification the separate parts of my improvement are designated by the same numerals of reference in each of the views.

In the practice of my invention I provide a wrench which is provided with a handle which consists of a central portion 5 and two detachable side plates 6.

The central portion 5 of the handle is wider at one end than at the other, as shown at 7, and the detachable side plates 6 are similar in form, and formed in the wider end of the central portion of the handle is a longitudinal slot 8 and a transverse slot or opening 8^a, which communicates therewith, and mounted in the longitudinal slot or opening 8 is a shaft 9, which is screw-threaded for a portion of its length, and mounted on the screw-threaded portion of said shaft is a wheel 10, by which the shaft may be operated.

The transverse slot or opening 8^a extends through the side plates 6, and the wheel 10 projects therethrough, and the outer end of the shaft 9 is rectangular in cross-section and provided at its opposite sides with ratchet-teeth or projections 11.

The opposite sides of the central portion 5 of the handle at the wider end thereof are cut away to form circular notches or recesses, as shown at 12, and the sides 6 are provided with semicircular heads 13, which overlap these cavities or recesses 12. My improved wrench is also provided with two similar jaws 14, which are preferably of the form shown in the drawings, said jaws being wider at the inner than at the outer ends, and said jaws are also provided with circular heads 15, which fit between the semicircular heads 13 of the sides 6 and which are pivoted therein by means of the bolts or pins 16.

The semicircular heads 15 of the jaws 14 are provided on their inner perimeters with teeth 17, which are adapted to engage with those formed on the outer end of the shaft 9, and the jaws 14 are also preferably provided with teeth or serrations 18, which are formed in their adjacent surfaces.

The operation will be readily understood from the foregoing description when taken in connection with the accompanying drawings and the following statement thereof.

The side plates 6 of the handle are secured to the central portion 5 thereof by the pivot pins or bolts 16 and also by other pins or bolts. By turning the wheel 10 the shaft 9 may be moved outwardly or inwardly, according to the direction in which said wheel is turned, and in this operation the teeth 11 on the outer end thereof will operate in connection with the teeth 17 on the circular heads 15 of the jaws 14 and said jaws will be separated or drawn together, as will be readily understood, the direction of the movement of said jaws depending on the direction of the movement of the shaft 9.

My improved wrench is simple in construction and operation and is perfectly adapted to accomplish the result for which it is intended, and it will be apparent that changes in and modifications of the construction herein described may be made without departing from the spirit of my invention or sacrificing its advantages.

Having fully described my invention, I claim as new and desire to secure by Letters Patent—

1. A wrench, comprising a handle, one end of which is wider than the other, and provided with two pivoted jaws, each of which is

provided with a circular head through which the pivot pins or bolts pass, and a longitudinally-movable shaft mounted in said handle, and provided on the opposite sides of its outer end with teeth or projections which are adapted to operate in connection with corresponding teeth or projections formed on the circular heads of said jaws, and means for moving said shaft longitudinally of the handle, substantially as shown and described.

2. A wrench, comprising a handle, one end of which is wider than the other, and provided with two pivoted jaws, each of which is provided with a circular head through which the pivot pins or bolts pass, and a longitudinally-movable shaft mounted in said handle, and provided on the opposite sides of its outer end with teeth or projections which are adapted to operate in connection with corresponding teeth or projections formed on the circular heads of said jaws, and means for moving said shaft longitudinally of the handle, consisting of a wheel which is mounted thereon, and which projects through the sides of the handle, said wheel being screw-threaded interiorly, and said shaft being also screw-threaded, substantially as shown and described.

3. A wrench, comprising a handle, composed of a central longitudinal portion, and two side plates, said handle being wider at one end than at the other, and being also provided with two jaws which are pivoted between the wider ends of said side plates, said jaws being provided with circular heads through which the pivot pins or bolts pass, and said heads being provided with teeth or projections, and a longitudinally-movable shaft mounted in the central portion of the handle, and provided with teeth or projections on the opposite sides of the outer end thereof, and means for moving said shaft longitudinally of the handle, substantially as shown and described.

In testimony that I claim the foregoing as my invention I have signed my name, in presence of the subscribing witnesses, this 14th day of June, 1897.

ROBERT FOOTE CROSBIE.

Witnesses:

CHRISTOPHER R. WEST,

ARCHIBALD CROSBIE, Jr.