Sept. 7, 1937. T. P. McFADDEN 2,092,321

METHOD OF CLEANING AND GAS FREEING SHIPS' OIL TANKS

Original Filed July 13, 1934

Fig. 2.

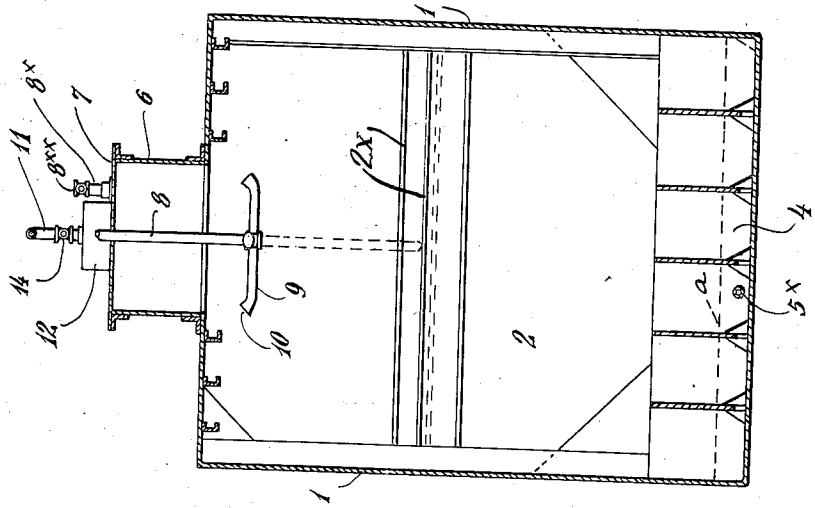

Fig. 1.

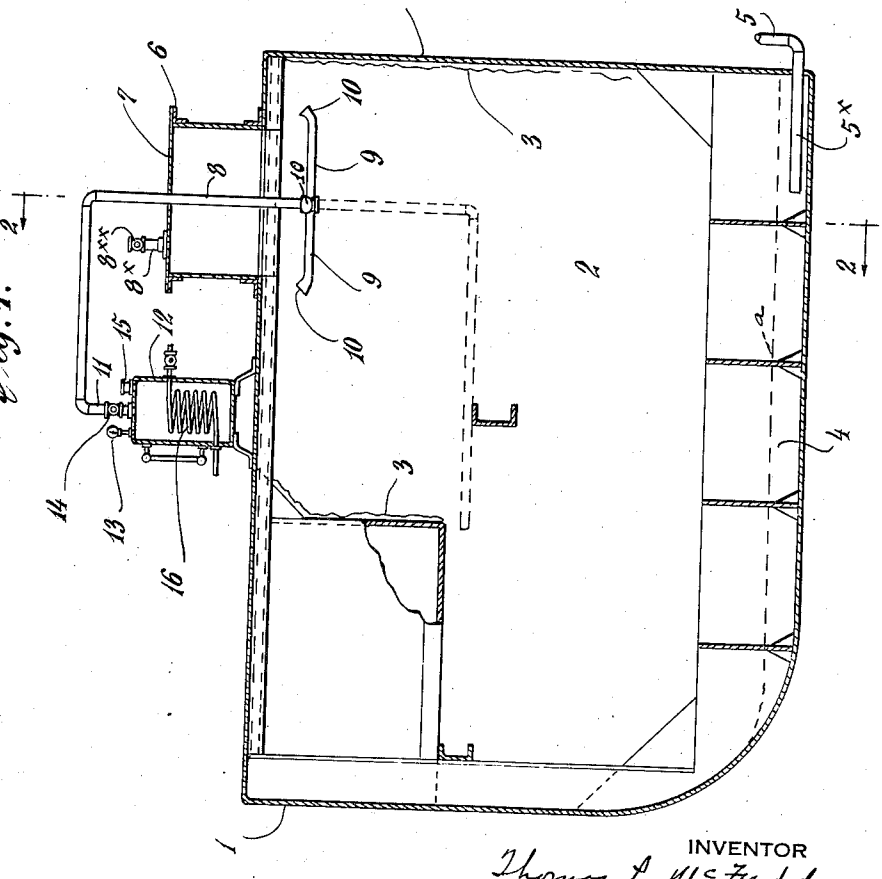

INVENTOR
Thomas P. McFadden
BY
W. Lee Helms
ATTORNEY

Patented Sept. 7, 1937 2,092,321

UNITED STATES PATENT OFFICE

2,092,321

METHOD OF CLEANING AND GAS-FREEING SHIPS' OIL TANKS

Thomas P. McFadden, Flushing, N. Y.

REISSUED

Application July 13, 1934, Serial No. 734,900
Renewed December 23, 1936

2 Claims. (Cl. 87—5)

This invention relates to a process or method of degreasing and gas-freeing tanks used for holding oil for transportation or storage. This invention is an improvement on the known processes which attempt to secure vapor-condensate cleaning, as shown in the Freeman Patent No. 1,832,697 and Murphy Patent No. 529,338.

I describe my method as follows:—

As in other methods, I use a generator containing any oil or grease solvent, such as trichlorethylene, with a steam coil or other source of heat for vaporizing the solvent, with a pipe of ample dimensions from the generator to conduct the vapor to the tank to be cleaned.

My process from this point differs from all others.

The pipe from the generator is connected to an inlet pipe extending vertically one or two feet into the tank and there connected to a T fitting with a plurality of horizontal pipes open at the ends. The generator is fitted with a valve controlling this inlet.

The tank is provided with a vent at the top, controlled by a valve, there being no other open outlets from the tank.

The method of operation employed by me is as follows:—

By heating the solvent in the generator, I build up a pressure of 50 to 100 pounds of solvent vapor in the generator. The vent valve in the tank being closed, I open the generator valve quickly, leaving it open for a few minutes, thus admitting the solvent vapor into the upper portion of the tank with considerable velocity.

By reason of its greater density and its high velocity, the vapor acquires a substantial momentum sufficient for it to overcome the resistance of the air and reach the upper sides and ceiling of the tank, where it condenses and liquefies the hydrocarbon deposit. If the vapor lacks this momentum, its relative density will force it to the bottom of the tank, leaving the top portion untouched.

The same result occurs if the vapor is initially introduced into the lower portion of the tank and projected upwardly in the manner described.

The vapor forms a blanket over the air, exerting a downward pressure thereon. The vapor settles slowly, cleaning the sides of the tank as it goes and displacing the air from the bottom of the tank, causing it to rise to the top of the tank. The cushion of air resulting from this pressure is an essential feature, since without its retarding influence on the settling vapor, the vapor would settle quickly to the bottom without cleaning the sides of the tank on its downward path. Without this slowing up of the action, an impracticable amount of vapor would be required for effective cleaning. After a few minutes, I then open the vent valve, allowing the air and hydrocarbon gases to escape until, by observation, I see that the solvent vapor is also beginning to escape, whereupon I close the vent valve. At this point, therefore, the tank is fairly free of air and hydrocarbon gases. The sudden release of the air and hydrocarbon gases by this quick venting creates a turbulent action on the vapor which has not condensed on the metal surfaces in the upper parts of the tank, causing an effective redistribution of the same. I then open the inlet valve from the generator and allow the solvent vapor to flow until the pressure in the generator drops to a few pounds. The vapor thus admitted reaches all the metal surfaces of the tank, condensing thereon and liquefying the hydrocarbon oil which flows to the bottom of the tank.

A vital part of the procedure lies in the use of the vapor at considerable pressure and the successive steps whereby this vapor is condensed on the under-ceiling and the extreme upper parts of the walls, whereas, if the vapor be introduced from the lower part of the tank the pressure of air in the upper part of the tank prevents the vapor reaching and condensing on those parts.

Another vital part of the process is the secondary step, namely, the complete venting of the tank from air and hydrocarbon gases.

Another advantage of this process is that due to the venting of air and hydrocarbon gases, and the use of considerable pressure from the generator, the vapor penetrates all non-water-tight plate laps or similar construction of interior strength members which, if not cleaned, would be potential sources of hydrocarbon gases.

The method will be described in connection with the drawing, wherein

Fig. 1 illustrates in cross section a tank of a usual construction, and

Fig. 2 illustrates the same in longitudinal section, both figures showing the tank with other elements of the vessel having applied thereto apparatus for carrying the method into effect.

In the figures, the hull of a ship is indicated at 1 and the tank at 2, 2x indicating splash or baffle plates. 3 indicates a heavy viscous deposit left by fuel oil contained within the tank and drained therefrom, and 4 a body of oil left in the tank and extending to the dotted lines *a*. At 5 is indicated a drain pipe having a branch 5x leading to the exterior of the tank.

At its top the tank is provided with a manhole at 6 having the customary removable cover 7. Projecting through an aperture formed in the manhole is a pipe 8 having at its lower end branch pipes 9, each pipe carrying a frusto-conical discharge head 10.

Also projected through an aperture formed in the manhole or other upper portion of the tank is a pipe 8*x* having a controlling valve 8*xx*.

Pipe 8 is connected to a conduit 11 which projects within the top of a heating chamber 12 having a pressure gauge 13. The conduit may be provided with a regulating valve 14 and a release valve 15. Within heating chamber or vapor generator 12 may be placed a steam coil 16 having suitable valve controls for admitting and shutting off steam employed to vaporize the solvent placed within the generator.

In carrying out the process for gas-freeing, it is preferable to first pump out oil from the tank should the latter contain such oil.

When solvents of the class of carbon tetrachloride and trichlorethylene are used, the heavy vapor will immediately render the hydrocarbon gas within the tank non-inflammable and may enable repairs from the exterior of the tank by acetylene torch.

As an example of operation of the process on a marine fuel tank of 120,000 gallon capacity having wall and baffle hydrocarbon deposits, the deposits on the inner walls of the plates of the tank being of heavy viscous character, I subject 100 gallons of solvent such as trichlorethylene within the generator to heat until the pressure of vaporization reaches 50–100 pounds per square inch. The solvent vapor is admitted to the interior of the tank by opening valve 14 until a back pressure is shown.

Under the substantial pressure within the generator the solvent vapor rushes with great velocity within the tank and being directed outwardly and upwardly from the inflow pipe, the vapor strikes the walls of the tank, its momentum enabling it to be deflected to the upper sides and ceiling of the tank. Although the vapor is heavier than the air, the cushion of air displaced by the solvent vapor has a certain retarding influence on the settling of the vapor so that the latter has sufficient time in its contact with the upper sides and ceiling of the tank to condense and clean the said area after which the vapor in the upper portion of the tank is displaced by the lighter air. After a few minutes, the vapors still being under pressure within the tank, I open valve 8*xx* and the hydrocarbon gases and air driven up to the top of the tank by the solvent vapor are forced out of the pipe 8*x*, whereupon valve 8*xx* is closed. This release of the air and hydrocarbon gases under pressure of the solvent vapor creates a turbulent action upon the latter causing redistribution of the same for added tank surface condensation. In usual cases, after venting, I open the inlet valve from the generator and admit a further charge of solvent vapor until the pressure within the tank is again built up.

By the successive steps of my method, ships' tanks and other tanks of very large capacity may be thoroughly cleaned by injection of the solvent vapor through a single conduit and suitable branch conduits within the tank and the latter may be of such size as readily to be inserted into the tank through an ordinary manhole, whereas it is known to me that previous attempts by others to clean ships' tanks, tank cars, etc., by solvent vapor method, have wholly failed.

While I have mentioned hydrocarbon oils and gases, the process is equally applicable to vegetable or animal oils.

I claim that the use of the solvent gas under pressure causes the vapor to penetrate and be absorbed into the residue in the tank bottom, which reduces the viscosity to a point where it can be removed by a pump.

After sufficient time has been given to enable adequate condensation and cleaning action of the vapor, the pump may be operated to withdraw deposits liquefied and carried to the base of the tank. Incidentally, the pump may be effective to withdraw the remaining gases.

Prior to pumping, during pumping and after pumping, but preferably after the pump has withdrawn substantially all the liquefied deposit, air or steam may be injected into the tank to aid the pump to withdraw gases or to force gases out through a suitably controlled vent which may be arranged as to discharge into a solvent recovery condenser. Also water substantially equivalent in volume to the pump capacity may progressively be admitted to the base of the tank as the pumping proceeds which raises the liquefied deposit and facilitates the removal thereof.

As a result of the method the interior walls and baffle plates of the tank, rivet heads and other surfaces will be entirely freed of deposits and the tank will be cleaned to an extent not realized by any other form of cleaning method known to me.

Having described my invention, what I claim and desire to secure by Letters Patent is as follows:—

1. A process of cleaning the interior surfaces of a ship's oil tank and the like, which comprises heating an oil-solvent characterized in vapor form as heavier than air to form a volume of the solvent vapor under pressure, injecting said solvent vapor into the top area of the tank and displacing thereby a horizontal layer of the air at the top of the tank whilst leaving the body of air in the tank below the solvent vapor as a means for retarding the speed of descent of the vapor, continuing the injection of the solvent vapor to build up pressure within the tank, permitting a time interval sufficient to cause the air to rise to said top area of the tank above the descended heavier body of solvent vapor, and discharging the said air from the tank by the pressure of the underlying solvent vapor.

2. A process of cleaning the interior surfaces of a ship's oil tank and the like, in accordance with claim 1 followed by the step of injecting a fresh charge of the solvent vapor into the top area of the tank to form a top layer of solvent vapor of higher density than the vapor below it.

THOMAS P. McFADDEN.