(No Model.)

4 Sheets—Sheet 1.

# F. W. HEUSER.

## WOOD TURNING MACHINE.

No. 525,982.

Patented Sept. 11, 1894.

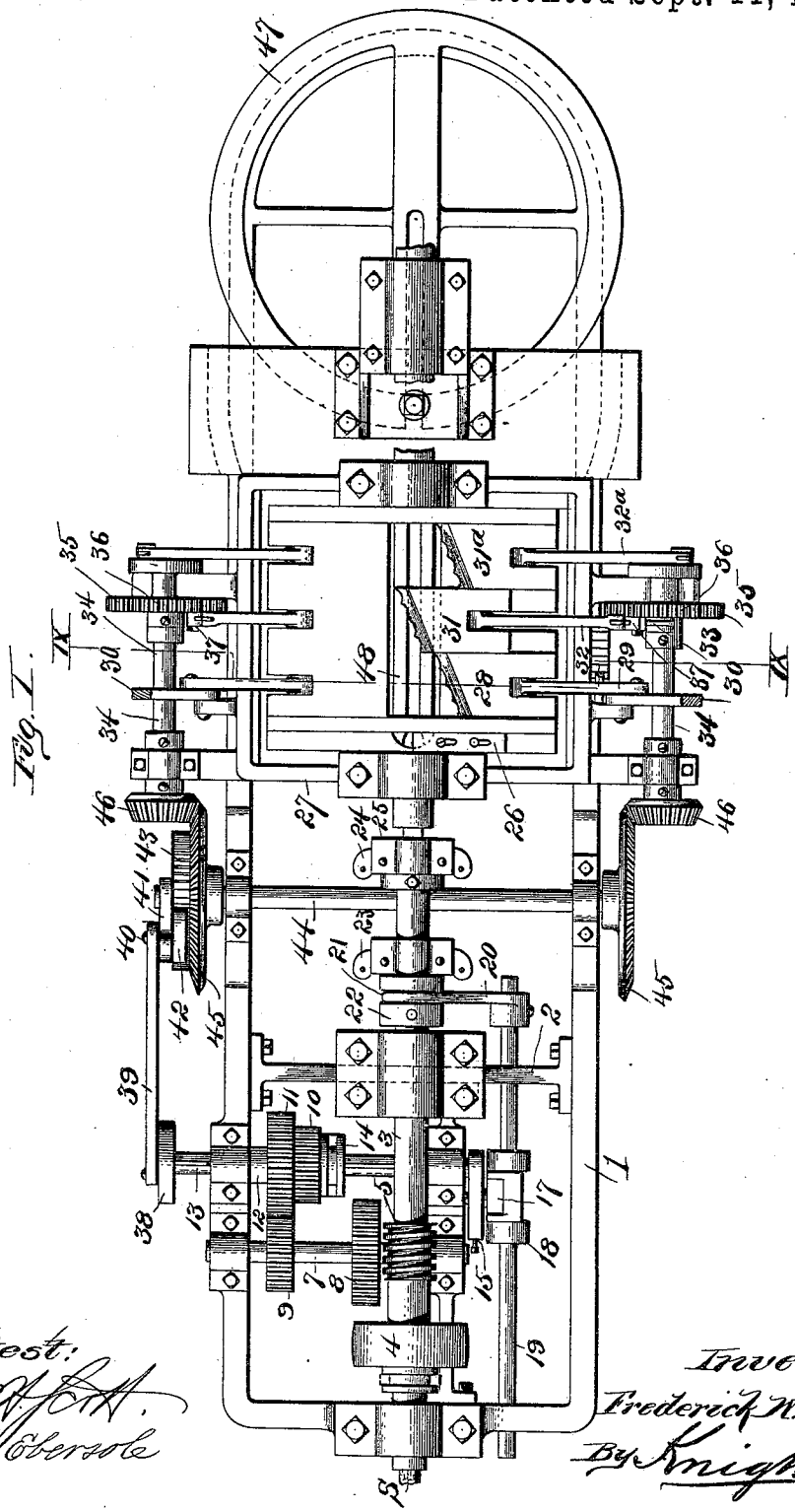


Attest:
Wm. H. Foth.
A. M. Ebersole

Inventor:
Frederick W. Heuser.
By Knight Bros
Attys

THE NOBRIS PETERS CO., PHOTO-LITHO., WASHINGTON, D. C.

(No Model.)

4 Sheets—Sheet 2.

# F. W. HEUSER.

## WOOD TURNING MACHINE.

No. 525,982. Patented Sept. 11, 1894.

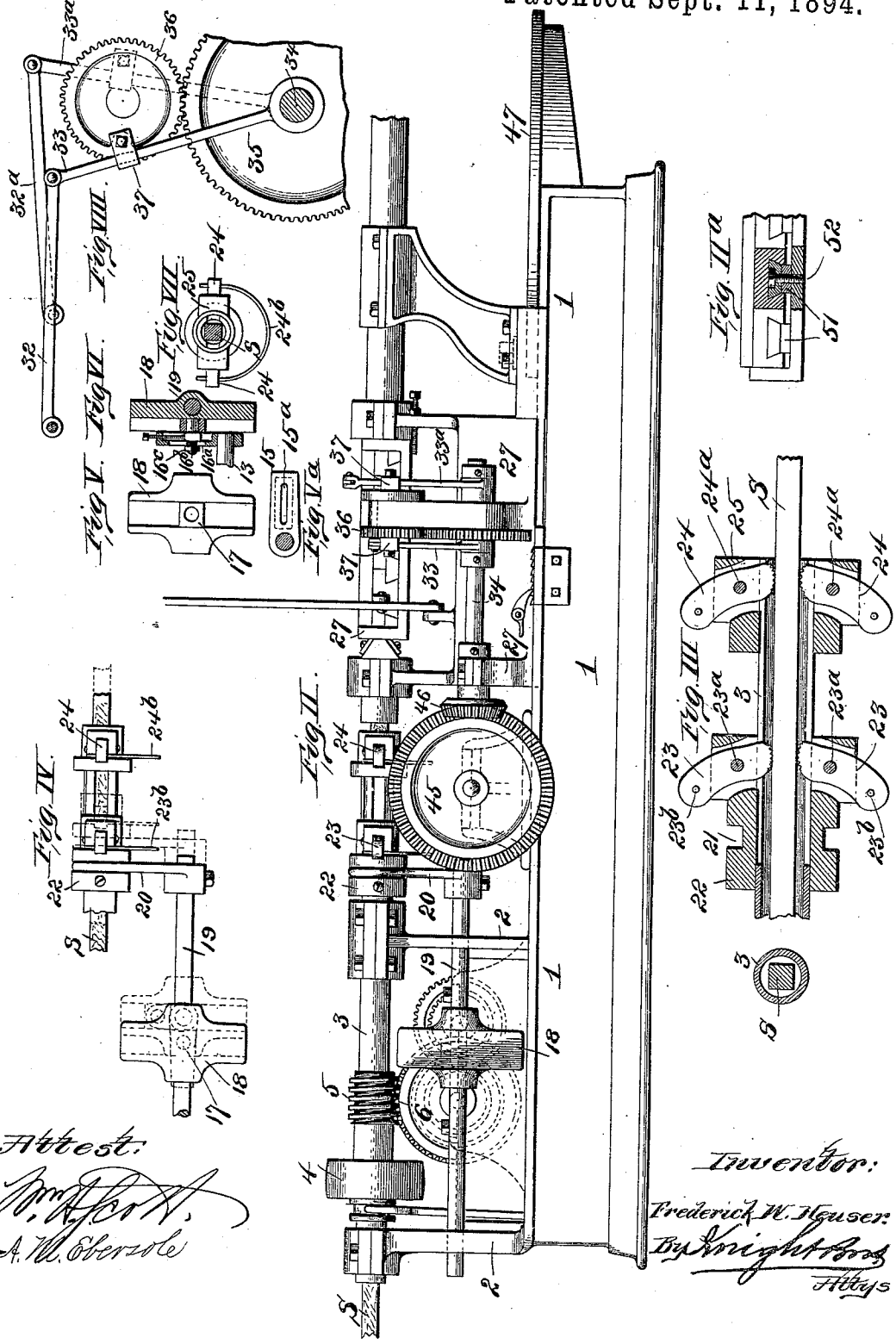


Attest:

A. W. Eberzole

Inventor:

Frederick W. Heuser

By Knight Bros

Attys

THE NORRIS PETERS CO., PHOTO-LITHO., WASHINGTON, D. C.

(No Model.)

4 Sheets—Sheet 3.

# F. W. HEUSER.

## WOOD TURNING MACHINE.

No. 525,982. Patented Sept. 11, 1894.

Fig. IX

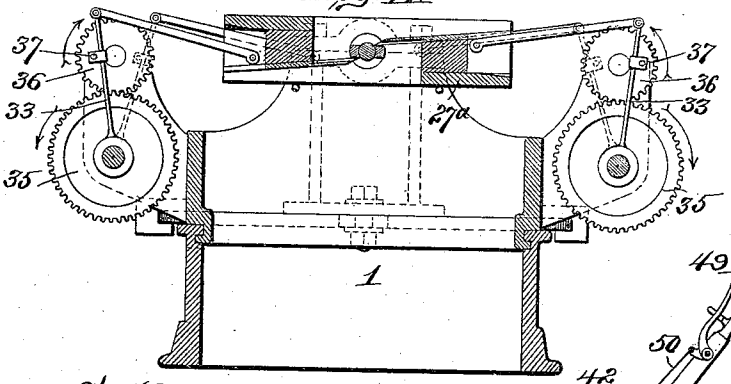


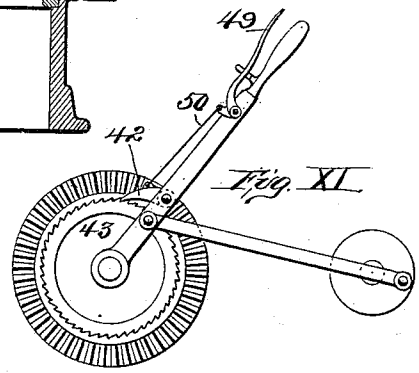


Fig. XI

Fig. X

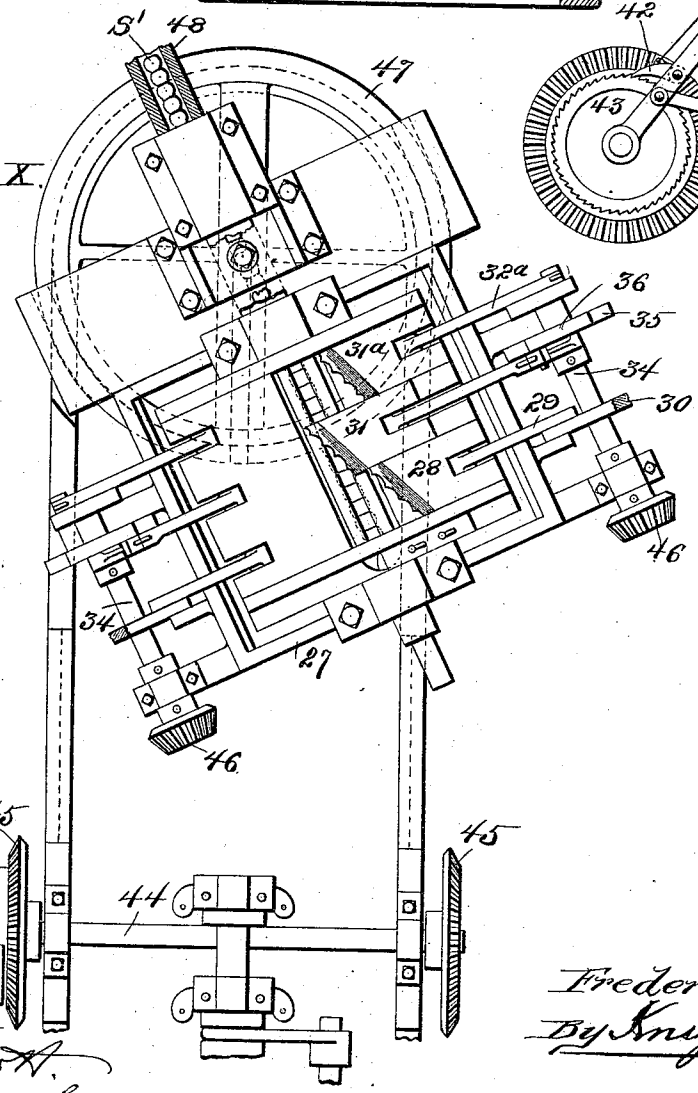


Attest
Wm. H. Scott
A. M. Ebersole

Inventor:
Frederick W. Heuser
By Knight Bros
Atty's

THE NORRIS PETERS CO., PHOTO-LITHO., WASHINGTON, D. C.

(No Model.)

4 Sheets—Sheet 4.

# F. W. HEUSER.

## WOOD TURNING MACHINE.

No. 525,982.

Patented Sept. 11, 1894.

Fig. XII.

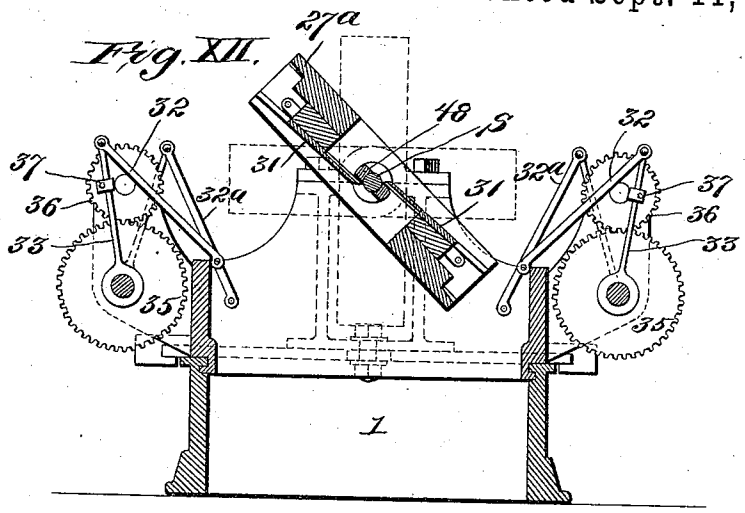


Fig. XIII.




Fig. XIV.




Fig. XV.




Fig. XVII.

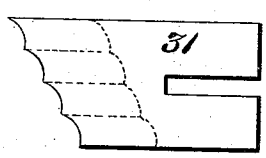


Fig. XVI.

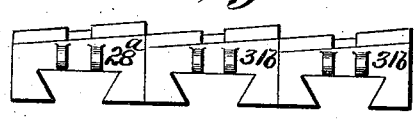


Fig. XVIII.




Fig. XIX.




Attest

Wm. H. Scott.

E. S. Knight

Inventor

Frederick W. Heuser.

By Knight Bros.

Attys

THE NORRIS PETERS CO., PHOTO-LITHO., WASHINGTON, D. C.

# UNITED STATES PATENT OFFICE.

FREDERICK WM. HEUSER, OF ST. LOUIS, MISSOURI.

## WOOD-TURNING MACHINE.

SPECIFICATION forming part of Letters Patent No. 525,982, dated September 11, 1894.

Application filed August 7, 1893. Serial No. 482,501. (No model.)

*To all whom it may concern:*

Be it known that I, FREDERICK WILLIAM HEUSER, of the city of St. Louis, in the State of Missouri, have invented a certain new and useful Improvement in Wood-Turning Machines, of which the following is a full, clear, and exact description, reference being had to the accompanying drawings, forming part of this specification.

This invention relates to machinery for turning wood of small diameter, and especially sticks of such small size that they have not sufficient strength to resist the pressure of the cutting tools without bending. To suitably rotate, guide and feed the sticks to the cutters, I employ a hollow mandrel, with reciprocating feed clamps working therein, and a hollow guide rest through which the stick is fed to the cutters. Automatic cutters are arranged in pairs, with two cutters in each pair acting simultaneously on opposite sides of the stick, and the several pairs of cutters being brought into action alternately, so as to reduce the resistance applied thereby to the rotating stick.

The invention further relates to details in construction and operation of the feed, the method of working the cutters, the mode of removing the work from the machine, and other features hereinafter specifically pointed out.

In the accompanying drawings, which illustrate a machine embodying my invention, Figure I is a plan view. Fig. II is a side elevation. Fig. II$^a$ is a detail elevation, partly in section, illustrating the mode of underlaying the cutter guides, to regulate the height of the cutters to agree with the size of the work. Fig. III is a detail, longitudinal section of the hollow mandrel, with the feed clamps and the rough stick therein, showing also a transverse section of the mandrel and stick. Fig. IV is a side elevation of the intermittent feed mechanism. Figs. V and V$^a$ are detail, face views of a cross-head and crank arm, employed to apply intermittent feed movement to the stick, as hereinafter described. Fig. VI is a section of the cross-head and crank, showing means for adjusting the crank pin radially, to vary the length of feed. Fig. VII is a rear view of the fixed feed clamp, showing the stick in transverse section. Fig. VIII is a detail elevation of mechanism employed for imparting reciprocating movement to a pair of cutters. Fig. IX is a transverse section of the line IX—IX, Fig. I. Fig. X is a plan of the rear part of the machine, illustrating the movement of the head block into oblique position, to permit the removal of the finished work, as hereinafter described. Fig. XI is a detail view of the pawl and ratchet gear employed for communicating the feed movement to the cutters, and for arresting such movement of the cutters when required. Fig. XII is a similar view to Fig. XI, but in which the cutter operating rods are disconnected from the cutters and the frame is shown partially revolved on its axis, the mandrel, and in dotted lines in horizontal and vertical position. Fig. XIII is a detail top view of the mandrel and showing the skeleton bar, which is formed in said mandrel, for the purpose of allowing the working of the cutters with the rear end of the cutter elevated so that the point of the cutter at the forward end is seen upon the stick being turned. Fig. XIV is a cross-section taken on line XV—XV, Fig. XIII, through the hollow mandrel outside of the skeleton bar. Fig. XV is a cross-section taken on line XV—XV, Fig. XIII, through the hollow mandrel outside of the skeleton bar. Fig. XVI is a top view showing a rear elevation of the cutter guides whose top surfaces are inclined transversely and to which the cutters are secured. Fig. XVII is a top view of one of the cutters. Fig. XVIII is a perspective view of one of the cutters, and Fig. XIX is a front perspective of one of the cutters.

Upon a suitable bed 1, are standards 2, in which is mounted a hollow mandrel 3, to which rotary movement is imparted by suitable means, as, for example, a belt pulley 4, in connection with which I have shown a friction attachment, but this is not essential. Upon the exterior of the mandrel 3 is an endless screw or worm 5, gearing with a worm wheel 6, upon the shaft 7 of which are keyed a pair of differential gears 8, 9, imparting movement to either of the two corresponding pinions 10, 11, which are mounted by a sleeve 12 upon a feathered shaft 13, so as to impart rotation to the said shaft at the desired speed, accordingly as either of the pinions 10 or 11

is adjusted into gear with the cog wheel 8 or 9, by means of the sliding gland or clutch 14 connected with said pinions. Upon one end of the shaft 13 is a crank 15, the pin 16 of which is adjustable radially, as illustrated in Fig. VI. The pin 16 turns in a box 17, sliding vertically in a cross-head 18, which is mounted upon a rod 19, so as to impart longitudinal movement thereto.

In order to vary the stroke of the rod 19, the crank pin 16 is adjustable radially in its arm 15. For effecting this adjustment, I have shown, (in Fig. VI) said pin formed with a square head $16^a$, fitted to slide in a rabbeted groove in the crank arm 16, (indicated by dotted line in Fig. $V^a$,) and with a screw stud $16^b$ projecting through a longitudinal slot $15^a$ in the crank-arm, and receiving a clamp-nut $16^c$. This clamp-nut being loosened, the pin 16 may be moved in or out in the arm by means of a screw $15^b$, and the clamp-nut $16^c$ is then re-tightened to fix it in any position to which it is adjusted.

Upon the forward end of the rod 19 is keyed an arm 20, bifurcated at its end to engage in the annular groove 21 in a sleeve 22 in the forward end of which are pivoted a pair of clamp dogs 23, fulcrumed at $23^a$, and having their rear ends pressed outward by a spring $23^b$, so that their oblique faces will be caused to grip the stick in the forward movement, and to pass freely over the same in reverse movement.

S represents the stick of timber, inserted in the hollow mandrel 3.

24 represents a second pair of clamp dogs, fulcrumed at $24^a$, in a fixed head 25, and pressed out at their rear ends by a spring $24^b$ for the purpose of holding the stick S securely in the mandrel, compelling it to rotate therewith, and preventing it following the gripping clamps 23 in their backward movement, preparatory to a new stroke. The faces of the dogs 23 and 24 are corrugated, as illustrated in Fig. III, both transversely and longitudinally, to adapt them to grip the stick more securely. The hollow mandrel 3, is of course made large enough for the sticks of the largest size, which are to be worked. In order to reduce its internal diameter to the size of smaller sticks, a suitable bushing is employed.

The rough stick being inserted in the hollow mandrel 3, and fed through the same by a step by step movement, as explained, is rounded and reduced to any size required by a pair of cutters 26, secured adjustably by means of longitudinal slots in a frame $27^a$, which is mounted to turn in the head block 27, on its axis, the feed mandrel as is clearly illustrated in Fig. XII, in which the cutter rods are shown disconnected from the cutter guides, and the frame $27^a$ is shown partially revolved in dotted lines in horizontal and vertical position, said frame being adapted to be used with either side uppermost: the object in making it so that it may be turned over being to allow either side being brought on top, so that the cutters may be easily inserted or removed. In the head block 27 are also mounted a pair of cutters 28, of suitable form, mounted on guides $28^a$, operated by rods 29, and hand levers 30, and also several pairs of automatic cutters 31, $31^a$ mounted on guides $31^b$.

The cutters 28 are operated by hand, to impart the required form to the end of the stick, and this done, the automatic feed movement of the stick advances the same a sufficient distance to bring it under the action of the automatic cutters 31, $31^a$, which act successively thereon after each feed movement of the stick in a manner now to be described.

On each side of the machine are a pair of rods 32 $32^a$, pivoted at their inner ends to the guides $31^b$ and at their outer ends to vertical arms 33, $33^a$, mounted to turn upon the shaft 34. Each of the said shafts 34 carries a gear wheel 35, meshing with a pinion 36, upon which are pivoted boxes 37, fitted to slide upon the arms 33, $33^a$, and thus imparting an oscillating or reciprocating movement thereto in a vertical plane by the rotation of the pinion 36. For the purpose of feeding the cutters, the gear wheel 35 receives an intermittent movement from the shaft 13, by the following means: A crank wheel 38 on said shaft is connected by a pitman 39 with the pin 40 of the crank arm 41, on which is pivoted a pawl 42, engaging with a ratchet wheel 43 upon a transverse shaft 44, on the end of which are beveled gear wheels 45, meshing with beveled pinions 46 upon the longitudinal shafts 34, which are arranged on opposite sides of the head block, and carry the cog wheels 35, gearing with the pinions 36, which actuate the feed arms 33, $33^a$ of the cutter, as already described.

The pinions 36, rotating in the direction indicated by arrows, impart a slow forward feed movement to the cutters, while they are doing their work by reason of the boxes 37 being near the extremities of the arms in the forward movement, and they are drawn back with a much more rapid movement by reason of the nearer approach of the boxes to the fulcrum point in the return stroke.

The head block 27 is mounted to slide backward on the bed 1 upon a turn-table 47 to permit it to be turned into the position shown in Fig. X, for removing the finished work, as hereinafter described.

For the purpose of guiding the work to the cutters, and providing a rest to prevent the deflection of the stick, the head block 27 is constructed with a skeleton guide bar 48, open at top and bottom to expose the stick to the cutters, as shown in Figs. I, IX and X. The edges of the cutters are made oblique, as clearly shown in Fig. 1, as is customary in wood turning, to adapt them to work with greater ease and smoothness, the blades being transversely inclined to correspond as shown in Fig. XVI, in order to

give the oblique edge a square bearing, and the blades of the cutters are also inclined longitudinally in a vertical plane, as clearly shown in Fig. IX, so that as their stocks are guided in a horizontal plane, the surface of the cutter will not rest against the work, after it passes the cutting edge. By mounting the cutter stocks in a frame $27^a$, which rotates in a vertical plane see Fig. XII, within the head block, the entire cutter frame may be turned upside down, to give access to the lower cutters. The cutters 28 and 31 and $31^a$ may have any desired form on the edge for the production of moldings, and other irregular shapes. In Figs. I and IX I have shown cutters 31, $31^a$, of suitable form for the production of a simple beaded molding S', such as illustrated in Fig. X.

The operation of the machine is as follows: The rough or square stick S is inserted in the hollow mandrel 3, as shown in Figs. I and II, and may be run through the same until its forward end comes against the rounding cutter 26. The machine being started, the feed dogs 23 grip the stick, and in the forward movement imparted by the crank 15, through the medium of the sliding rod 19, the stick is fed the correct distance to reach the end forming tool or cutter 28, which is shaped to impart the desired form to the extremity of the stick, whether it be a bevel or taper, or dowel, or whatever may be required, though the cutter 28 may be of the same form as the cutters 31 and $31^a$, and is so shown in the drawings, and the next forward stroke presents a suitable length of the stick to the shaping cutters 31, $31^a$, after which the end cutters 28 may be retired and the work proceeds automatically. The rotation of the stick is continued, while its forward feed movement is arrested in the return stroke of the sliding rod 19, which carries the feed grippers 23 over the stick, the latter being gripped against retrograde movement by the stationary gripping dogs 24, in the fixed rotary head 25. During the backward movement of the feed mechanism of the stick, the cutter feed mechanism is actuated by the crank 38, rod 39, and the connections already described, so as to impart the required forward feed movement to the cutters 31, $31^a$ successively, and completely retract the same after their effective stroke is completed, the gearing being so proportioned as to impart exactly a complete rotation to the cutter feed shafts 34 by about one-fourth rotation, more or less, of the crank shaft 13, the cutters 31, $31^a$, being thus left at rest during the forward feed movement of the stick. In this manner the feed movement of the stick and the feed movement of the cutters are performed alternately.

The feed movement of the stick is arrested while the molding cutters are working, and it is necessary that the parts be so adjusted as to impart a complete revolution to the cutter feed mechanism, and neither more nor less, causing the cutters 31 and $31^a$ to complete their work, successively and on different parts of the stick, during each retrograde movement of the feed nippers 23, and to retire said cutters before the stick is again fed forward, and the regulation of this part of the device I accomplish through means of the pawl 42 working upon the ratchet-wheel 43 in such manner that the pawl moves a determined distance around the periphery of the ratchet-wheel, during the movement of the pitman 39.

When it is desired to arrest the work of the cutters 31, $31^a$, while feeding the round stick to any distance, this is effected by means of the hand lever 49, mounted on the arm 41, and connected by a wire 50 with the pawl 42, so as to raise the said pawl from the ratchet wheel 43. The stick having been thus worked up as far as possible, the cross-head 27 is slid forward to disconnect the bevel pinions 46 from their gears 35, and the entire cross-head is then turned around upon the table 47 into the oblique position shown in Fig. X to permit the work to be drawn backward out of the mandrel rest 48, or if the stick has been rounded to the end, it may be drawn completely through and removed at the rear end of the mandrel, without deflecting the head block.

For the purpose of adjusting the cutters in height, to suit the thickness of the work, the cutter guides may be underlaid, as illustrated in Fig. $II^a$, with blocks 51 of the requisite thickness, the whole being held solid by screws 52.

I claim as my invention—

1. The combination of the hollow mandrel, 3, worm 5, worm wheel 6, shaft 7, interchangeable gear 8, 9, 10, and 11, crank shaft 13, crank arm 15, connections 18, 19, 20, sleeve 22, and grippers 23; substantially as and for the purposes set forth.

2. The combination of the hollow mandrel, feed devices mounted therein, the guide rest, suitable cutters working in conjunction therewith, and feed connections, substantially as herein described, operated by the rotation of the mandrel, imparting feed movement alternately to the stick and to the cutters, so as to feed the stick forward in the intervals of rest of the automatic cutters; substantially as set forth.

3. The combination of the mandrel 3, worm 5, shafts 7, 13, with their connecting gear, feed movement of the mandrel driven from the said shaft 13 by connections such as the crank 15, slide 18, rod 19, and arm 20; the crank wheel 38, pitman 39, pawl and ratchet movement 41, 42, 43, gearing 45, 46, shaft 34, gear wheels 35, 36, and automatic cutters 31, $31^a$ actuated therefrom, substantially as described.

4. The combination of the cutters 31, $31^a$, and guide rest 48 mounted by a pivoted frame $27^a$ within the head block 27, for the purpose of inverting the cutters and their guiding frame, substantially as explained.

5. The combination of the head block 27,

carrying the guide rest 48, cutters 31, 31ª, and means for moving them, and the turn-table 47 onto which said head block is capable of being slid for the purpose of moving it around in horizontal plane, substantially as described.

6. The combination of the guide rest 48, the cutters 31, 31ª, mounted in oblique position, and the cross-head 27 constructed with frame 27ª, guiding the cutter-stocks in a horizontal plane, substantially as described.

7. The combination of the hollow mandrel 3, feed connections 5, 6, 7, 8, 9, 10 and 13, crank arm 15, crank pin 16, radially adjustable therein, and the slide 18 and feed connections, substantially as described, receiving a reciprocating movement, variable in extent, by the radial adjustment of said crank pin; substantially as explained.

FRED. WM. HEUSER.

In presence of—
OCTAVIUS KNIGHT,
A. M. EBERSOLE.