United States Patent [19]

McCarty

[11] **3,794,443**

[45] **Feb. 26, 1974**

[54] **WIDE DISPERSION FAN IMPELLER**

[75] Inventor: **William J. McCarty,** Louisville, Ky.

[73] Assignee: **General Electric Company,** Louisville, Ky.

[22] Filed: **Aug. 30, 1972**

[21] Appl. No.: **285,073**

[52] **U.S. Cl.** **416/175,** 416/200, 416/203

[51] **Int. Cl.** **F04d 29/38**

[58] **Field of Search** 416/175, 200, 203

[56] **References Cited**

UNITED STATES PATENTS

1,568,946	1/1926	Generich	416/175
1,804,016	5/1931	Koenig	416/175
2,269,049	1/1942	Zellweger	416/175
2,288,917	7/1942	Norris	416/244 X
2,350,939	6/1944	Sprouse	416/243 X
3,201,032	8/1965	Gelbard	416/175
3,575,524	4/1971	Adajian	416/243 X

FOREIGN PATENTS OR APPLICATIONS

1,069,279	2/1954	France	416/175
1,214,836	7/1968	Great Britain	416/243

Primary Examiner—Everette A. Powell, Jr.
Attorney, Agent, or Firm—Walter E. Rule; Francis H. Boos, Jr.

[57] **ABSTRACT**

A wide air dispersion propeller fan comprising a plurality of backwardly curved blades some of which are shaped to provide axial air flow and others of which additionally have trailing edge portions substantially parallel to the fan axis for providing radial air flow therefrom.

2 Claims, 5 Drawing Figures

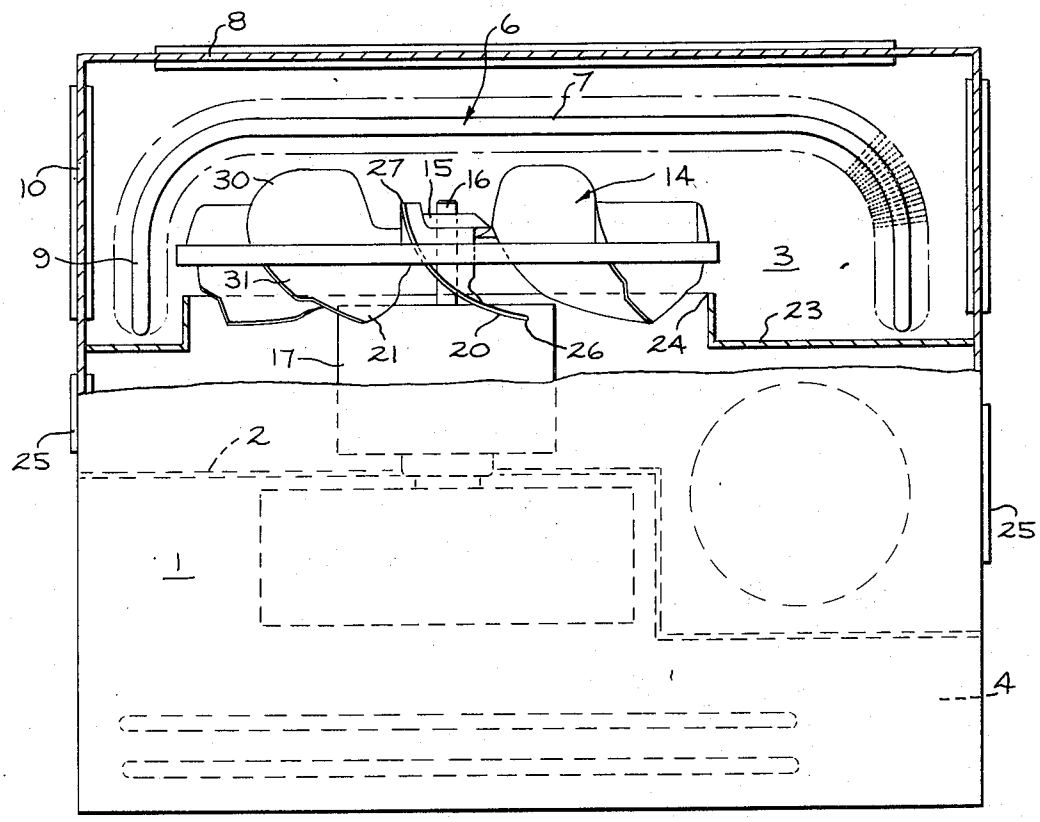

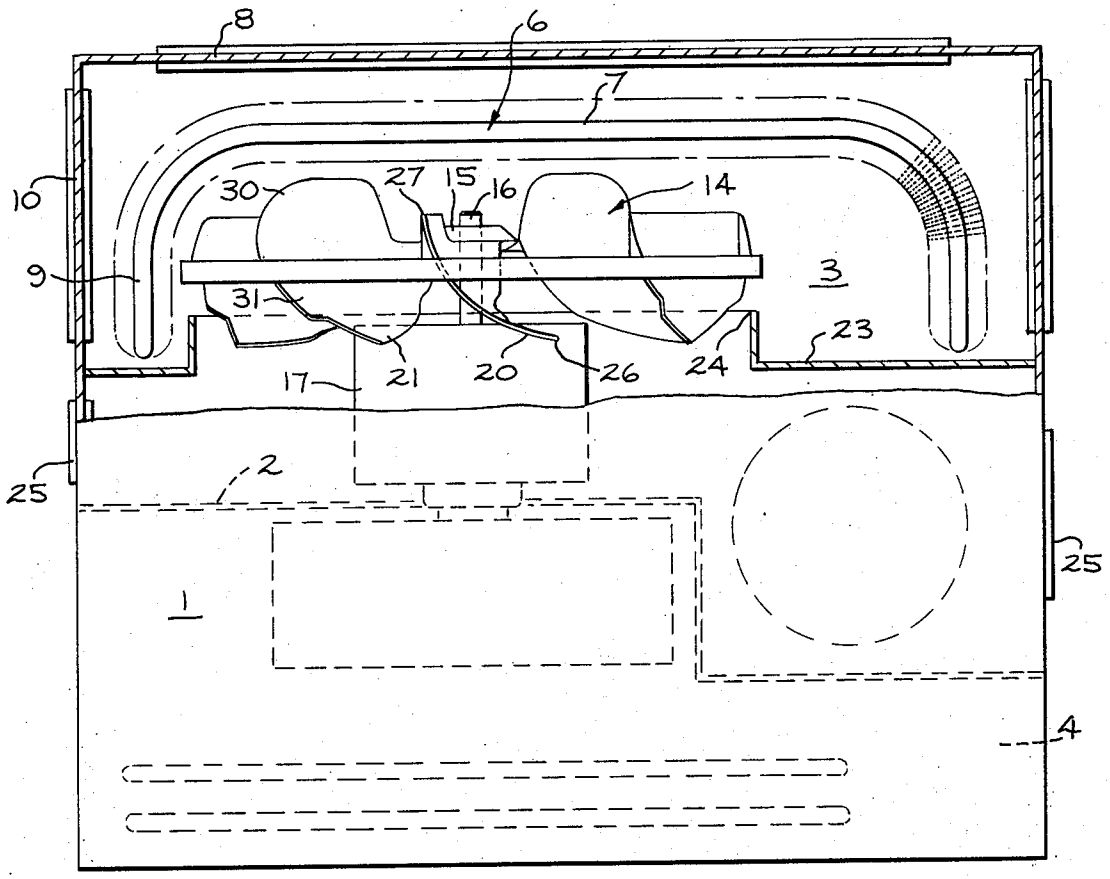

FIG. 1

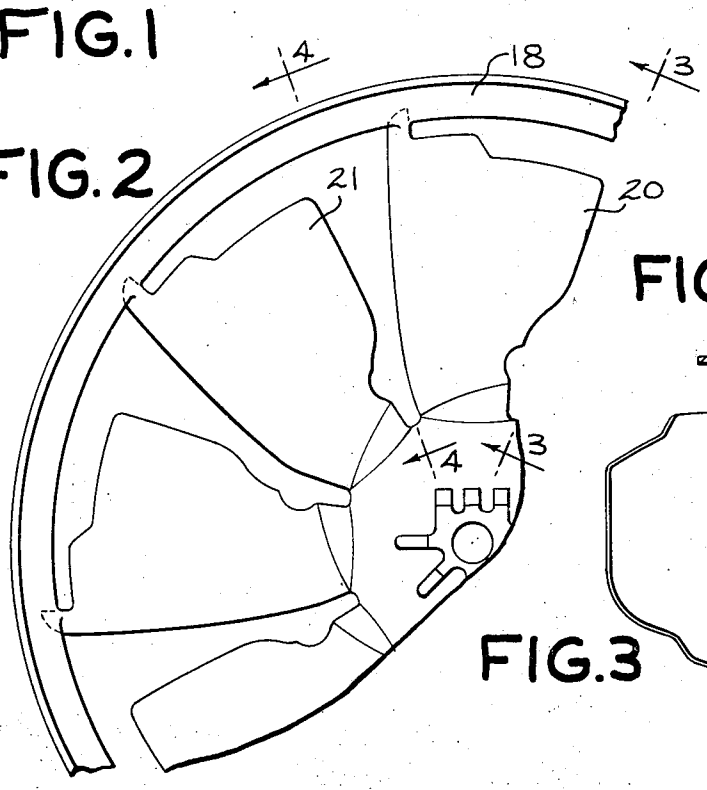

FIG. 2

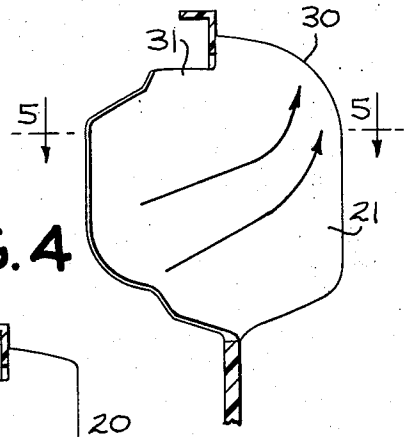

FIG. 4

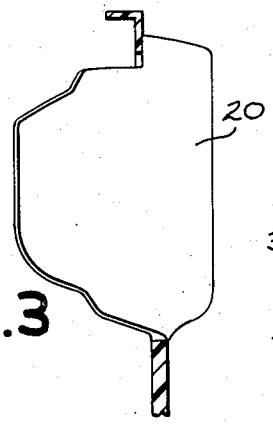

FIG. 3

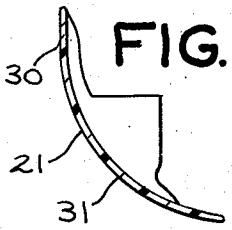

FIG. 5

WIDE DISPERSION FAN IMPELLER

BACKGROUND OF THE INVENTION

Mixed flow fans, that is, fans providing both an axial and radial air flow have usually contained two separate and distinct types of blades, usually two sets of blades, one set being composed of propeller type fan blades providing axial air flow and the other set comprising centrifugal blower type blades providing substantially all radial air flow.

An example of a fan of this type is disclosed in U.S. Pat. No. 2,274,033-Booth. Such a fan structure requiring the provision of two entirely distinct types of blade structures or shapes is relatively complicated and expensive in construction.

SUMMARY OF THE INVENTION

The present invention is directed to the provision of an improved wide dispersion fan comprising a plurality of propeller fan propeller fan blades extending radially from the fan hub, some of which are unmodified so as to provide maximum axial air flow and others of which are of a modified design providing a significant radial air flow.

In accordance with the preferred embodiment of the invention, there is provided a propeller fan comprising a plurality of backwardly curved blades extending radially from the fan hub, some of which terminate in trailing edges at which the plane of the blades is substantially parallel to the fan axis to provide a maximum axial flow. The remainder of the blades, for example very other blade, each includes a backwardly curved portion of the same shape and curvature as the first mentioned blades and, in addition, a trailing edge portion extending parallel to the fan axis and of sufficient depth to provide radial air flow therefrom.

BRIEF DESCRIPTION OF THE DRAWING

With reference to the accompanying drawing,

FIG. 1 is a plan view, partly in section, of a room air conditioning unit incorporating the fan of the present invention;

FIG. 2 is a front view of a portion of the fan illustrated in FIG. 1;

FIG. 3 is a sectional view along line 3—3 of FIG. 2 illustrating one of the axial flow blades;

FIG. 4 is a sectional view along line 4—4 of FIG. 2 illustrating one of the modified blades providing radial air flow; and

FIG. 5 is a sectional view along line 5—5 of FIG. 4.

DESCRIPTION OF THE PREFERRED EMBODIMENT

While the fan of the present invention may be used in any axial fan application requiring some radial air flow in addition to the usual axial air flow obtained by a propeller fan, it will be specifically described in its application to a fan particularly useful in a room air conditioner unit.

A room air conditioner unit requiring a mixed air flow pattern is illustrated in FIG. 1 of the drawing. The illustrated unit is a compact room air conditioner comprising a casing or housing 1 divided by an internal partition 2 into an outdoor section 3 and an indoor section 4. The outdoor section 3 contains a refrigerant condenser 6 which, due to space limitation, is generally U-shaped and includes a relatively long or wide main section 7 extending parallel to and substantially the full width of the louvered outdoor end wall 8 of the casing 1 and relatively short end sections 9 extending perpendicular to the main section and parallel to the opposite louvered side walls 10 of the casing.

For optimum operation, it is necessary to provide means for directing a flow of cooling air over all sections of the condenser and the present invention is directed to a modified propeller fan providing such an air flow pattern or distribution. The fan of the present inventon, designed to provide a mixed air flow pattern, is generally indicated in FIGS. 1 and 2 of the drawing by the numeral 14. It comprises a hub 15 adapted to be mounted on a shaft 16 driven by a motor 17 and a plurality of radially extending blades. In the illustrated fan, the outer ends of the blades are joined to a reinforcing ring 18 which in an air conditioning application also functions in a known manner as a slinger ring for the disposal of condensate.

Some of the blades, indicated by the numeral 20, are designed to provide maximum axial air flow while others of the blades indicated by the numeral 21 are designed to provide a radial air flow component or pattern. In the illustrated embodiment of the invention, the fan comprises equal numbers of alternate axial air flow blades 20 and radial flow blades 21, and the fan 14 is mounted for rotation within an orifice 24 provided in a partition 23 within the outdoor section 3 so that outdoor air is drawn into the outdoor section 3 through louvers, such as the louvers 25, and flows through the fan orifice 24 for discharge through the louvered outdoor end and side walls 8 and 10.

The fan blades 20 are of the well known backwardly curved type adapted to provide maximum axial air flow. These blades, as best illustrated in FIG. 1 of the drawing, include leading edges 26 forming an acute angle with the plane of the orifice 24 and trailing edge portions 27 terminating the curved portions of the blades at the point where the blades become substantially parallel to the fan axis as represented by the shaft 16. The air flow from these blades 20 is primarily axial and thus principally flows in cooling relationship with the central or main portion 7 of the condenser when the fan is positioned generally within the area bounded on three sides by the main section 7 of the condenser and the end sections 9 thereof.

In order to provide a radial air flow component for directing a flow of some of the air discharged by the fan over the end sections 9 of the condenser, every other fan blade, specifically the fan blades 21, are of a greater depth than the fan blades 20 and include trailing edge portions of sufficient depth or width to provide a radial air flow component. More specifically, each of the blades 21, which are otherwise of the same shape and size as blades 20, includes a trailing edge portion of substantial depth or width, which edge portion 30 is substantially parallel to the fan axis. This additional blade depth, having a substantially 90° pitch, causes the air picked up by the blades 21 to change from an axial flow as provided by the backwardly curved sections 31 of the blades to a radial air flow as it passes over the trailing edge portions of the blades. This changing flow direction is illustrated by the arrows in FIG. 4 of the drawing. In other words, the additional depth of the blades 21, as compared with the blades 20, which addi-

tional depth is provided by the substantial edge portions **30** having a pitch of about 90°, substantially increases radial air flow from the fan thereby providing the desired wide dispersion air flow cooling both the main section **7** and the end sections **9** of the condenser. Specifically, there is a wide dispersion of the air flow from the fan **14** which results in a distribution of the air over all of the surfaces of the U-shaped condenser.

A comparison of the shape of the blades **20,** as shown in FIG. **1** of the drawing, and the blades **21,** as shown in FIG. **5** of the drawing, will show that all of the blades have in common the same backwardly curved cross sections. The blades **20** terminate or have trailing edges at the points at which the backwardly curved blades become substantially parallel to the fan axis or, in other words, approach or approximate a 90° pitch. The blades **21,** having as an additional depth the 90° pitch portions **30,** convert the predominant axial air flow provided by their curved sections to a significant radial air flow, the additional trailing edge portions **30** being the only difference between the blades **21** and the blades **20.**

It will be obvious, of course, that the axial distribution of the air flow between radial and axial will depend not only on the width or depth of the trailing edge portion **30** of the blades **21** but also on the relative number of blades **21** as compared with the axial air flow blades **20.** In the illustrated embodiment of the invention, the blades **20** and **21** are of equal number and are alternately arranged. If an increased radial air flow is desired, the proportion of blades **21** can be increased or,

conversely, if a decreased radial air flow is desired, the relative number of these blades may be decreased.

While there has been shown and described a specific embodiment of the present invention, it is to be understood that it is not limited thereto and it is intended by the appended claims to cover all such modifications as fall within the true spirit and scope of the invention.

1. A propeller fan comprising a plurality of backwardly curved blades;

some of said blades terminating in trailing edges at points at which the planes of said blades become substantially parallel to the fan axis for maximum axial flow operation;

the remainder of said blades having a greater depth and comprising backwardly curved portions of substantially the same size, shape and curvature as said some of said blades and in addition having trailing edge portions generally parallel to the fan axis and of sufficient depth to provide a radial air flow therefrom.

2. A wide dispersion propeller fan comprising a plurality of radially extending blades all having backwardly curved sections terminating in trailing edge portions substantially parallel to the fan axis;

alternate blades having trailing edge portions which are substantially parallel to said axis and are of greater depth than the remaining blades to convert the predominant axial air flow provided by their backwardly curved sections to a radial air flow therefrom.

* * * * *