(12) UK Patent Application (19) GB (11) 2 055 084 A

(21) Application No **7928228**
(22) Date of filing
14 August 1979
(43) Application published
25 Feb 1981
(51) **INT CL³ B65B 43/00**
(52) Domestic classification
B8C 4053B 40T1A
40T5 U6
(56) Documents cited
None
(58) Field of search
B8C
(71) Applicant
Dala-Invest AB
Röda vägen 48C
S 781 00 Borlänge
Sweden
(72) Inventor
Bjarne Glud-Möller
Busch
(74) Agents
F J Cleveland & Company
Chartered Patent Agents
40–43 Chancery Lane
London WC2A 1JQ

(54) Bagging check-out counter

(57) A check-out counter whereat bags are automatically supplied and opened, said bags being stored in strip form with handles of one bag being connected to the base of the next bag, includes a bag feed arrangement (4, 5, 6, 8) for advancing and lowering the leading bag into a bag opening and filling compartment in the counter, a clamp (9) which cooperates with a conveyor (8), forming part of the bag feed arrangement, to separate said leading bag from the remainder of the bag strip, and movable and fixed vacuum jaws (10, 11) for engaging and opening the bag in said compartment.

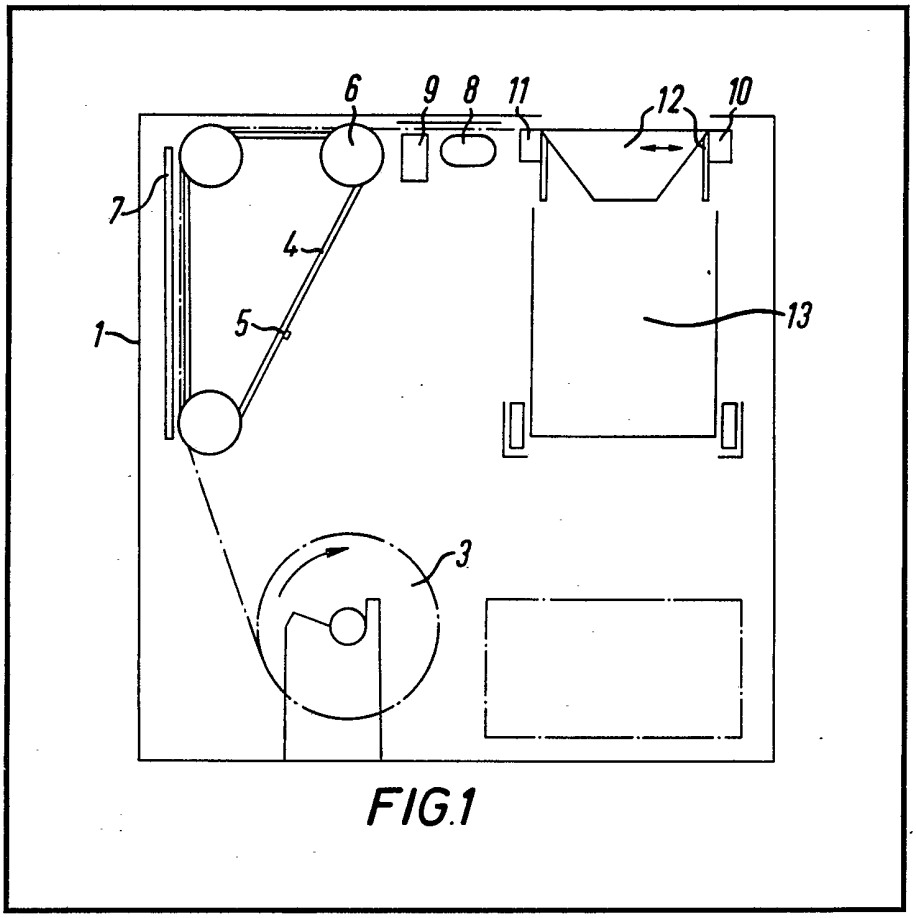

FIG.1

GB 2 055 084 A

The drawings originally filed were informal and the print here reproduced is taken from a later filed formal copy.

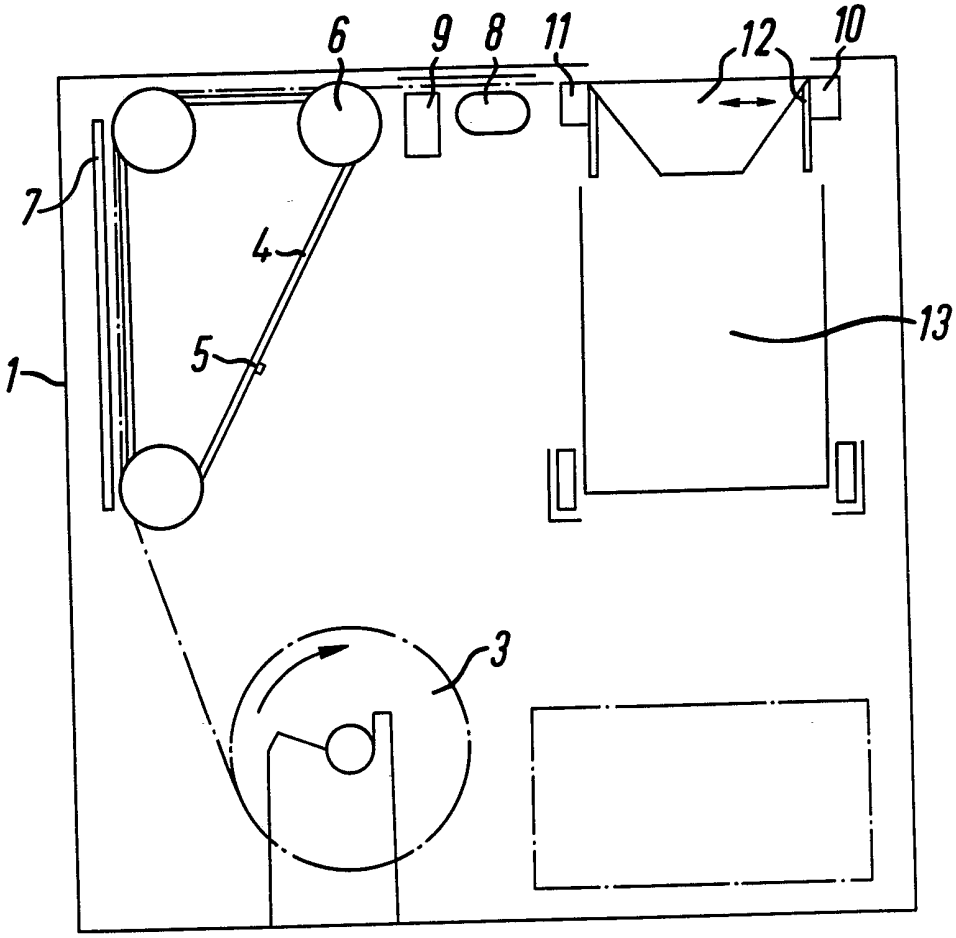

FIG.1

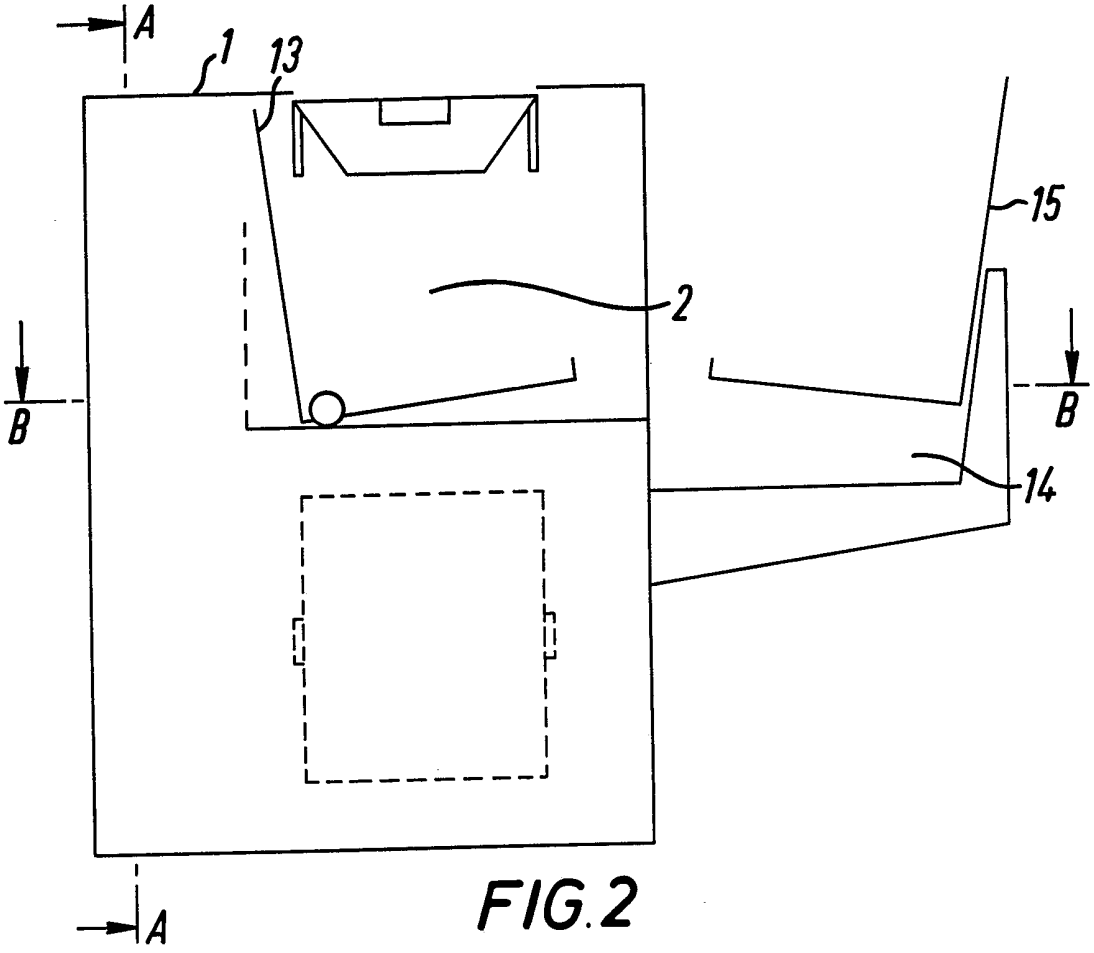

FIG.2

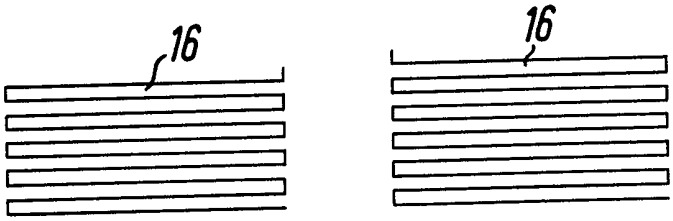

FIG.3

SPECIFICATION

A method of automatically handling bags for purchases, and to a check-out counter for performing the method

This invention relates to a method of automatically handling bags for purchases, and to a check-out counter for performing the method.

When goods are bought in self-service shops, customers have to go check-out counters after making their purchases, to give the goods to the check-out operator, who records the prices by taking each article in her hand and reading off the price, whereupon the articles are usually conveyed on a conveyor belt to the end of the counter, where the customer picks them up. There are certain disadvantages in the handling of the articles as carried out heretofore, particularly in the case of large purchases, since there is a loss of time due to the double handling operations, long waiting times, which are increased where then is an inadequate number of bags for the purchases and new bags have to be brought up, and this in turn means pressure on the check-out operators.

The object of this invention is to facilitate the operations on passing through the check-out counter, more particularly by eliminating the double handling of the goods by the check-out operator and the customer as was previously the case, thus giving a significant simplification. In addition, the quality of the articles must not be impaired nor must the goods be damaged such as may occur, for example, if the usually plastics bags brought by the customer tear, with the consequence of unnecessary time spent while other customers are held up. Another object of the invention is to ensure that the goods can be transported when the customer has left the check-out.

To this end, according to the invention, the strip of bags is taken from a stock of bags, with the bag base forwards, and passed over the edge of a container, the top of which is open, the first bag of the strip as considered in the direction of movement thereof being lowered into the container during the advance, the bag strip advance is interrupted when the top edges of the foremost bag situated between the handles have reached the front edge of the container, said bag is separated from the strip by subjecting the retained strip to tension, the bag sides hanging down into the container are moved apart and held fast, the bag opening being held for the purposes of introducing goods in the direction of the container opening, whereupon the bag is released and removed from the container.

The invention thus provides automatic handling of the goods, handling for reading the price being combined with the introduction of the articles into one or more bags which the customer can pick up without any loss of time. It will be clear that the saving of time is considerable, particularly at very busy periods, when extra operators frequently have to be used to expedite the packing of the articles. Apart from the saving of time and the economies indicated, the invention also provides an undisturbed flow of customers past the check-out. The fact that the articles are secure for transport as mentioned above, is guaranteed by the choice of suitable material for the bags, the way in which handling is carried out according to the invention, and by the fact that the bags are all alike.

The invention will be explained hereinafter with reference to the drawing, in which

Figure 1 is a diagrammatic section through a check-out counter on the line AA in Fig. 2, while Fig. 2 is an elevation of the counter on the line BB in Fig. 2.

The housing 1 of an ordinary check-out counter has an opening 2, which extends down from the top of the counter into the interior thereof and which serves as a container for carrier bags. These bags are constructed as part of a strip consisting of connected bags and, in the example illustrated, are stored in the form of a reel 3 in the bottom part of the counter. From there the bags are taken to a drive mechanism consisting of two parallel endless belts 4 trained over three reversing rollers 6 formed with recesses to accommodate the belts 4. Drivers 5 are provided on these belts 4. The bag is taken via the belts and conveyed by the latter by the driver 5 engaging in recesses in the bag, the bag being secured by a holding mechanism 7. In the example illustrated, the holding mechanism 7 consists of rails which are disposed pivotally in the region of the belts 4 and are pressed against the bag by means of springs so that the driver 5 engaging in the recess in the bag cannot disengage therefrom.

When the first bag of a new strip of bags is introduced, the holding mechanism 7 is lifted so that the first bag can be fitted against the belts 4, the driver 5 being introduced into the bag recess, whereupon the holding mechanism 7 is applied against the bag. The mechanism 7 is then held in this position by its springs. This operation is carried out only when a new strip of bags is introduced into the counter. A start facility (not shown) operated by the check-out staff, starts a drive acting on one or more of the rollers 6. The bag is advanced by a conveyor 8 with its base forwards, as far as the opening 2, where the bag is placed into the container. As soon as the top edge of the bag situated between the bag handles reaches the edge of the opening 2, contactless sensors (not shown) actuate a clamp mechanism 9 which presses the bags against the underside of the counter top, so that the continuing movement of the front bag by the conveyor 8 causes said bag to be

separated from the strip of the remaining bags. At the same time the further conveyance of the strip of bags is stopped. The sensor then transmits a signal to a servo-mechanism (not shown), which causes a pair of vacuum jaws 10 to move towards the bag transversely across the opening 2 and engage in the container, still unopened, as far as a second pair of fixed vacuum jaws 11 which retain one side of the bag by suction, whereupon the first pair of vacuum jaws 10 is returned into its original position, the longitudinal side of the bag being simultaneously entrained so that the bag is opened. Four conical flaps 12 are then swung down into the bag out of a horizontal position, so that the bag opening is held open for introduction of the articles.

As soon as the purchases have been placed in the bag, or the bag is full, the flaps 12 are swung up into their horizontal position. The vacuum jaws 10, 11 release the sides of the bag by actuation of the servo-mechanism, so that the bag is free in the container. This contains a basket or trolley 13 which assumes a rearwardly inclined position so that its base is at an angle to the bottom of the opening 2. The basket 13 is then pushed out through an opening in the side of the counter by a compressed air operated device, for example, into a container 14, the base of which is somewhat below the bottom of the opening 2 in the counter. Here there is a basket 15 in a position inclined in opposition to the inclination of the basket 13. The front of the basket 13 pointing towards the opening in the side wall of the counter, and the back of the basket 15, which also faces this opening in the counter, are open. The bases of the baskets are constructed like forks 16 so that the base of the basket 13 can engage in the recesses in the fork-shaped base of the basket 15. The basket 13 drops forwardly into the container 14. The bag is placed on the base of the basket 15, from which it can be removed by the customer. The basket 13 is returned into its initial position in the opening 2, the mechanism according to the invention thus being ready to advance and fill a new bag. The container 14 can of course have different dimensions so that a number of bags can be introduced simultaneously.

Numerous variations of the arrangement and modifications of the configuration of the systems or their drives with respect to the exemplified embodiment illustrated are possible within the framework of the invention.

CLAIMS

1. A method of automatically handlings bags for purchases at a check-out counter, the bags being fitted together in strip form and readily separated from one another, the handles of one bag being connected to the base of the next bag, characterised in that the strip of bags is taken from a stock of bags, with the bag base forwards, and passed over the edge of a container, the top of which is open, the first bag of the strip as considered in the direction of movement thereof being lowered into the container during the advance, the bag strip advance is interrupted when the top edges of the foremost bag situated between the handles have reached the front edge of the container, said bag is separated from the strip by subjecting the retained strip to tension, the bag sides hanging down into the container are moved apart and held fast, the bag opening being held for the purposes of introducing goods in the direction of the container opening, whereupon the bag is released and removed from the container.

2. A check-out counter with a container for the articles sold, for performing the method according to claim 1, characterised in that the table is provided with a drive mechanism which is disposed beneath the counter top and which has drivers co-operating with recesses in the bags, the bags being conveyed stepwise from a stock to an opening, each step corresponding to the length of one bag in the strip, the opening in the checkout counter forms a container with an introduction opening at the top, said container having another opening beneath the counter top, said opening extending towards the drive mechanism and the bags being adapted to be introduced through said opening into the container, a periodically actuated clamping mechanism is provided between the outlet side of the drive mechanism and the edge of the opening adjacent said mechanism, and a conveyor is disposed between the clamping mechanism (9) and the edge of the opening and can be operated to separate the leading bag from the rest of the bags during actuation of the clamping mechanism (9), at least two vacuum jaws are provided in the region of the opening and are constructed to engage and open the bag in the opening, at least one vacuum jaw being provided in a fixed arrangement on the side of the opening facing the conveyor, and at least one vacuum jaw being disposed movably on the opposite side of the opening and being movable across the opening by means of a drive.

3. A check-out counter according to claim 2, characterised in that the drive mechanism comprises endless belts which are trained over reversing rollers and have drivers engaging in recesses formed in the individual bags.

4. A check-out counter according to claim 2 or 3, characterised in that flaps adapted to swing up and down are provided at the edges of the aperture of the opening in order to open and hold a bag fast.

5. A check-out counter according to claims 3 to 4, characterised in that the drive mechanism has a holding mechanism to se-

cure engagement of the driver in the bag recess.

6. A method of automatically handling bags as hereinbefore described.

7. A checkout counter constructed and arranged substantially as herein described and as shown in the figures of the accompanying drawings.

Printed for Her Majesty's Stationery Office
by Burgess & Son (Abingdon) Ltd.—1981.
Published at The Patent Office, 25 Southampton Buildings,
London, WC2A 1AY, from which copies may be obtained.