March 8, 1938. T. R. RHEA 2,110,716

CONTROL SYSTEM

Filed April 29, 1936

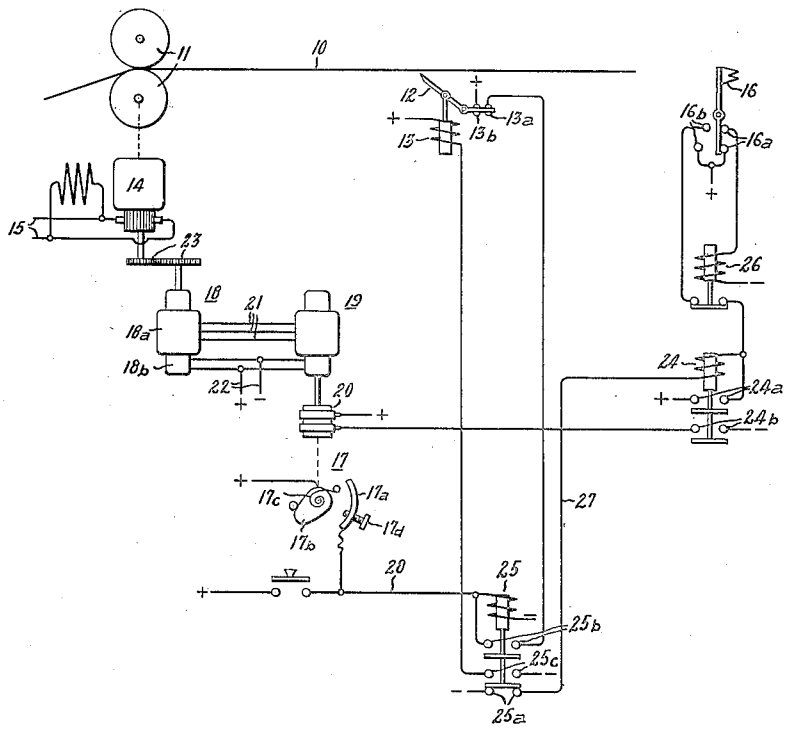

Inventor:
Thomas R. Rhea.
by Harry E. Dunham
His Attorney.

Patented Mar. 8, 1938 2,110,716

UNITED STATES PATENT OFFICE

2,110,716

CONTROL SYSTEM

Thomas R. Rhea, Pittsburgh, Pa., assignor to General Electric Company, a corporation of New York

Application April 29, 1936, Serial No. 76,992

7 Claims. (Cl. 164—68)

This invention relates to control systems, more particularly to control systems for apparatus having an element operating on a strip of material and it has for an object the provision of a simple, reliable and efficient control system of this character.

In one of its aspects, the invention relates to control systems for a shear that cuts a moving bar or strip of material into predetermined lengths, and a more specific object of the invention is the provision of means for introducing a time delay between the instant the material contacts a flag switch and the initiation of the cutting operation that is proportional to the speed of the material. The length of the material cut off must be adjustable and for this reason the duration of the time delay must also be adjustable.

In carrying the invention into effect in one form thereof, means are provided for feeding the strip of material to the element operating thereon, and time element means actuated in accordance with the speed of the strip are provided for controlling the operation of the operating element.

In illustrating the invention in one form thereof it is shown as embodied in apparatus for controlling the operation of a shear for cutting predetermined lengths from an advancing bar or strip of metal.

For a better and more complete understanding of the invention, reference should now be had to the following specification and to the accompanying drawing, the single figure of which is a simple, diagrammatical illustration of an embodiment of the invention.

Referring now to the drawing, a strip of metal 10 is being delivered from the rolls 11 of the last stand of a rolling mill to apparatus having an element such as the shear 12 operating thereon at intervals to cut predetermined lengths from the strip. The shear 12 is operated by suitable means illustrated as a solenoid 13. In actual practice the structure of the shear and operating mechanism may be quite different from the structure illustrated. For example, the shear blades may be parts of continuously rotating rollers and the strip may be carried in a trough which is moved laterally by suitable means such as a solenoid so that the strip is carried into the shear and reversed. In the interest of simplification, the solenoid 13 is illustrated as actuating a blade of the shear, but it will be understood, that it may be used merely to move the strip into the shear.

The rolls 11 of the last mill stand are driven by suitable driving means illustrated as an electric motor 14, supplied from a source of power represented by supply lines 15.

The shearing operation is initiated by suitable means illustrated as a flag switch 16. For the purpose of controlling the length of the material cut from the strip means are provided for introducing an adjustable time delay between the actuation of the flag switch and the operation of the shear. This means is illustrated as an adjustable cam switch 17 having a stationary contact member 17_a and a rotatable cam contact member 17_b which is biased to an initial position by means of a spring 17_c.

As shown, the rotatable member 17_b is arranged to be driven in accordance with the speed of the strip. For this purpose, an electrical motion transmitting system comprising a transmitting device 18 connected to be driven by the last finishing stand of the mill, a receiving device 19, and a clutch 20 for connecting the rotatable contact member to the rotor member of the receiving device 19. The transmitting device 18 comprises a stator member 18_a provided with a distributed three element winding that is physically similar to a three phase winding, and a rotor member 18_b provided with a single phase winding (not shown) in inductive relationship with the stator winding. The receiving device 19 is in all respects identical with the transmitting device. As indicated the terminals of corresponding legs of the stator windings are connected together by means of conductors 21, and the single phase rotor windings are connected to a source of single phase alternating voltage represented by supply lines 22. The currents flowing in the rotor windings of both devices induce voltages in the stator windings. When the axes of the rotor windings are in positions of correspondence the voltages induced in the stator windings are equal and opposite and no currents flow in the conductors 21. However, if the rotor of one of the devices is displaced relatively to the other, the voltages induced in the stator windings become unbalanced causing circulating currents to flow in the stator windings and conductors 21. As a result of these currents a torque is produced between the stator and rotor windings of the other device which causes its rotor to turn to a position of correspondence with the rotor that was turned. Thus, it will be seen that if the rotor member of transmitting device 18 is rotated, the rotor member of receiving device

19 will reproduce the motion of the transmitter.

The rotor member of the transmitter is connected through gearing 23 to the motor 14 that drives the rolls 11 of the finishing stand, and consequently the rotor of the receiver rotates at a speed dependent upon and proportional to the speed of the strip.

Suitable means illustrated as an electromagnetically actuated relay 24 are provided for energizing the electromagnetic clutch to connect the rotating contact member 17_b of the time delay device to the rotor of the receiver in response to actuation of the flag switch 16 by the end of the strip. It will be observed that the stationary member 17_a of the time delay device is provided with an adjustable contact member 17_d. By screwing this member inwardly or outwardly the time interval for rotation of the rotatable contact member from its zero position until contact is made with the stationary contact can be varied as desired.

An electromagnetically actuated relay 25 serves to energize the operating solenoid 13 of the shear mechanism in response to the contact closing operation of the time delay device 17. In order to prevent repeated operation of the shear before the flag switch has been released, a special interlocking relay 26 is provided. Relay 26 is designed to have a time delay in its drop-out operation that exceeds the time required for relay 24 to close its contacts in response to energization.

With the foregoing understanding of the apparatus and its organization, the operation will readily be understood from the following detailed description.

When the strip 10 does not engage the flag switch, the movable contact member bridges the stationary contact members to complete an energizing circuit for the special interlocking relay 26 that is readily traced from the positive side of a supply source, through contacts 16_a and operating coil of relay 26 to the negative side of the source. Accordingly, relay 26 is normally energized and its contacts closed. The end of the advancing strip strikes the flag switch 16 causing the movable contact member to open the contacts 16_a and to close contacts 16_b. The opening of contact 16_a interrupts the energizing circuit of relay 26. However, since relay 26 is designed to have a time delay in its drop-out action, its contacts remain closed until after the movable contact member has engaged stationary contacts 16_b to complete an energizing circuit for relay 24 and the latter has had time to close its contacts and complete a locking circuit independent of the contacts of relay 26. The energizing circuit for relay 24 is traced from the positive side of the source through contacts 16_b bridged by movable contact member of the flag switch 16, stationary contacts of relay 26 bridged by movable contact member, operating coil of relay 24, conductor 27 and lower stationary contacts 25_a of relay 25 bridged by a movable contact member to the negative side of the source. The locking circuit for relay 24 is completed through upper stationary contact members 24_a bridged by the upper movable contact member. At the expiration of the time delay for which relay 26 is designed, its contact opens.

In the closed position of relay 24, the lower movable contact member bridges stationary contact members 24_b to complete an energizing circuit for the electromagnetic clutch 20 which responds to connect the rotatable contact member 17_b of time delay device 17 to the rotor member of motion receiving device 19. Since the rotor member of the receiving device 19 is rotating at a speed proportional to the velocity of the strip 10, the movable contact member 17_b is rotated in a counter-clockwise direction from its zero position. After a time delay, dependent upon the speed of the strip and the setting of the adjustable contact member 17_d, the movable contact member 17_b engages the stationary contact member to complete an energizing circuit for the operating coil of relay 25. This circuit is seen to extend from the positive side of a source to the movable and stationary contacts of time delay device 17, conductor 28 and operating coil of relay 25 to the negative side of the source. Relay 25 in responding to energization causes the separate stationary contact 25_b to complete a locking circuit for the operating coil independent of the contacts of the time delay device 17. The lower stationary contacts of this relay are also opened to interrupt the locking circuit of relay 24 which thereupon opens both pairs of stationary contacts. In opening the lower pair of stationary contacts 24_b the energizing circuit for the clutch 20 is interrupted thereby disconnecting the rotatable contact member 17_b of the time delay device 17 from the rotor member of the motion receiving device 19 and the contact member 17_b is returned by means of the biasing spring 17_c to its zero position.

In the closed position of relay 25, the intermediate stationary contacts 25_c are bridged by the lower movable contact member to complete an energizing circuit for the operating solenoid 13 of the shear mechanism. As pointed out in the foregoing, the solenoid 13 may be regarded either as the means for actuating the shear to sever the strip 10 or it may be regarded as the means for moving the trough which carries the strip 10 so that the strip is moved into the shear and severed. From either point of view, it will be seen that energization of the solenoid 13 causes the strip to be severed. When the shearing operation is completed, the movable contact member 13_a of the shear limit switch is moved out of engagement with stationary contacts 13_b, thereby interrupting the locking circuit for the relay 25. In responding to deenergization, relay 25 opens its stationary contacts 25_b and also opens stationary contacts 25_c to interrupt the energizing circuit for the solenoid 13, thereby resetting the shear operating mechanism for the next cut. It will also be observed that in the deenergized condition of relay 25, the lower stationary contact members 25_a are bridged by the lower movable contact member thereby partially completing an energizing circuit for the operating coil of relay 24. However, no new signal for the operation of relay 24 will be obtained even though the movable contact member of the flag switch 16 is still maintained in engagement with stationary contacts 16_b because relay 26 is deenergized and its contacts opened, thereby preventing relay 24 from being energized until the flag switch 16 has been restored to its initial position. It will be noted that this provides an important function in keeping the shear from operating, even though the flag switch is still maintained in the operated position at the completion of a cut.

Although in accordance with the provision of the patent statutes, this invention is described as

embodied in concrete form, it will be understood that the apparatus and connections shown are merely illustrative and that the invention is not limited thereto since alterations and modifications will readily suggest themselves to persons skilled in the art without departing from the true spirit of this invention or from the scope of the annexed claims.

What I claim as new and desire to secure by Letters Patent of the United States is:

1. A control system for a shear and the like operating on a strip of material comprising means for feeding the strip to said shear, and electrical time element means actuated in accordance with the speed of said strip for effecting the actuation of said shear to sever said strip.

2. A control for a shear and the like operating on a strip of material comprising means for feeding the strip to said shear, an electrical switching device actuated by the strip, a time element device set in operation by said switching device and operated in accordance with the speed of said strip for effecting actuation of said shear to sever said strip, and means for adjusting the time interval of said time element device thereby to control the length of strip cut by said shear.

3. A control for a shear operating on a strip of material comprising means for feeding the strip to said shear, an electrical switching device actuated by said strip, an electrical time delay device for effecting actuation of said shear to sever said strip, said time delay device comprising a stationary contact member and a movable contact member separated from said stationary member, driving means operable in accordance with the speed of said strip, means controlled by said switching device for connecting said movable member to said driving means thereby to effect actuation of said shear to sever said strip a time interval after actuation of said switching device, and means for varying the separation of said movable and stationary contacts thereby to determine the length of strip cut by said shear.

4. A control system for a shear and the like operating on a strip of material comprising driving means operated in accordance with the speed of the strip, time element means for effecting actuation of said shear to sever said strip, said time element means comprising a rotatable contact member and a stationary contact member, a clutch between said rotatable member and driving means, and flag switch means actuated by said strip for energizing said clutch to connect said rotatable member to said driving means thereby to cause said shear to sever said strip a time interval after actuation of said flag switch dependent upon the speed of said strip and means for varying the time interval of said time element means thereby to control the length of strip cut off by said shear.

5. A control for a shear operating on a moving strip of material comprising an adjustable time delay device, a switching device actuated in response to passage of the strip for setting said time delay device in operation, an electromagnetic switching device actuated in response to operation of said time delay device for effecting operation of said shear to sever said strip a time interval after actuation of said first mentioned switching device, and a limit switch actuated by said shear for rendering said electromagnetic switching device inactive thereby to provide for reactuation of said first mentioned switching device by said strip.

6. A control system for a shear and the like operating on a strip of material comprising a contact device actuated by the strip and a time delay device set in operation thereby for effecting actuation of said shear, and interlocking means requiring release and reactuation of said contact device prior to reactuation of said time delay device.

7. A control for a shear and the like operating on a strip of material comprising driving means operable in accordance with the speed of the strip, a time delay device for effecting actuation of said shear, said time delay device having a rotatable contact member and a stationary contact member, a clutch between said driving means and rotatable member, a contact device actuated by the strip for controlling the energization of said clutch, and interlocking means requiring release of said contact device prior to reenergization of said clutch.

THOMAS R. RHEA.