May 27, 1952 R. ROBERTSON 2,597,950

INTERMITTENT DRIVING MECHANISM

Filed Dec. 11, 1950 2 SHEETS—SHEET 1

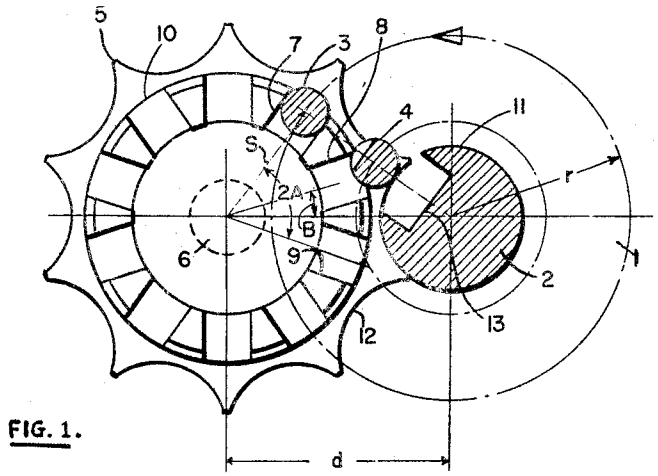

FIG. 1.

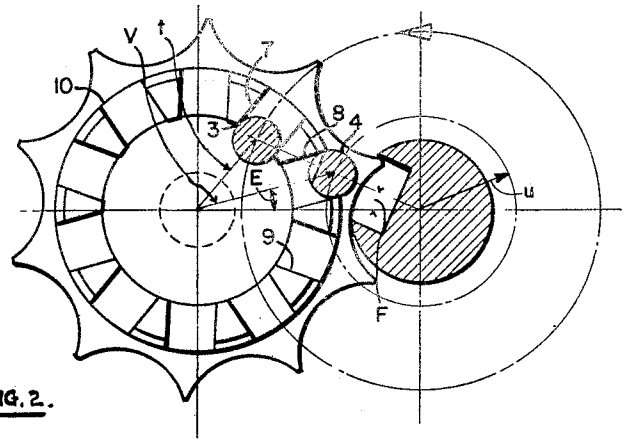

FIG. 2.

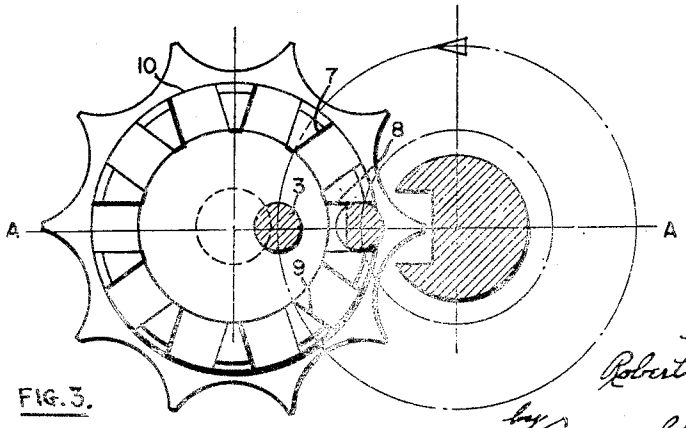

FIG. 3.

Inventor:-
Robert Robertson,
by Pierce, Scheffler & Parker,
Attorneys.

May 27, 1952 R. ROBERTSON 2,597,950

INTERMITTENT DRIVING MECHANISM

Filed Dec. 11, 1950 2 SHEETS—SHEET 2

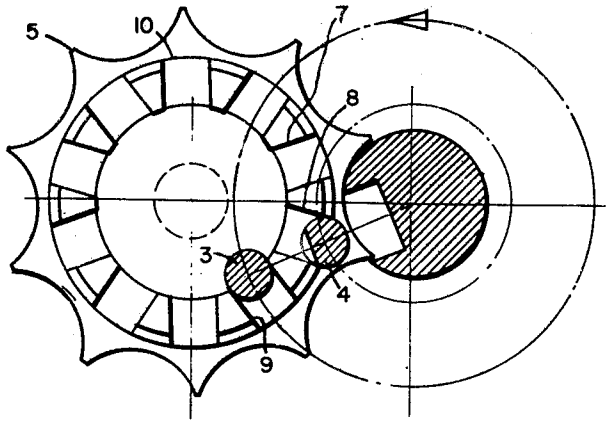

FIG. 4.

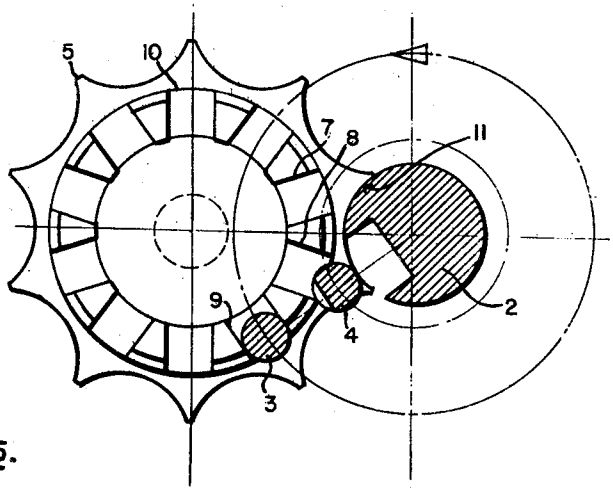

FIG. 5.

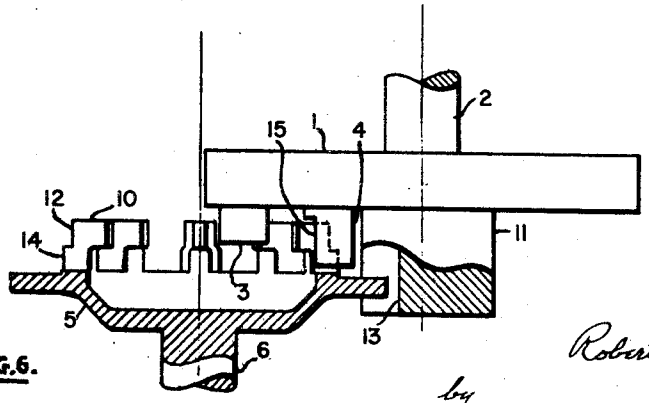

FIG. 6.

Inventor:-
Robert Robertson,
by Pierce, Scheffler & Parker,
Attorneys.

Patented May 27, 1952 2,597,950

UNITED STATES PATENT OFFICE

2,597,950

INTERMITTENT DRIVING MECHANISM

Robert Robertson, Roundhay, Leeds, England, assignor to British Optical & Precision Engineers Limited, London, England, a British company

Application December 11, 1950, Serial No. 200,151
In Great Britain October 13, 1948

7 Claims. (Cl. 74—436)

1

This invention relates to an improved intermittent driving mechanism of the kind usually known as a Geneva mechanism in which a rotatable wheel having equally spaced radial slots is intermittently indexed by a pin carried in a circular path by a constantly rotating driver and adapted to engage a slot in the wheel thereby indexing it during a part revolution of the driver, the wheel being held stationary for the remainder of the revolution of the driver, for example, by a cam adapted to lock the wheel when the pin is disengaged therefrom.

In order that the mechanism shall operate without shock it is necessary for the pin to enter and leave the wheel slots radially and it therefore follows that the angular movement of the driver required to index the wheel is determined by the angle through which the wheel is indexed and in known constructions is the supplement of this angle.

Geneva mechanisms of this kind are commonly employed in kinematograph projectors to impart the required intermittent motion to the film as it is fed through the projector.

In the case of a projector for standard 35 mm. film the wheel usually has four slots and is indexed 90° by a 90° rotation of the driving member, being at rest for the remainder of the revolution of the driver. The film is engaged and driven by a sprocket mounted on the shaft of the slotted wheel and hence the circumference of the sprocket must equal four picture pitches. These proportions are convenient for 35 mm. film as this has four perforations per picture which leads to a sprocket with 16 teeth.

For a projector for 16 mm. sub-standard film however, difficulties arise when attempts are made to incorporate a Geneva mechanism in the film feeding device. This is because 16 mm. film has only one perforation per picture so that with the same arrangement the sprocket would therefore have only four teeth and, in addition, would also be undesirably small in diameter on account of the small picture pitch.

Thus, for projecting 16 mm. film a greater number of stations in the wheel than four is desirable—practically, preferably not less than eight. It is also desirable to index the mechanism in a driving angle of less than 90° in order to increase the dwell but, as the driving angle is the supplement of the angle indexed, it increases as the number of stations is increased and for an eight station mechanism is 135°.

For these reasons the Geneva mechanism as commonly constructed is not suitable for a projector for 16 mm. or even smaller film.

2

The principal object of the present invention is to provide an intermittent mechanism which overcomes these disadvantages, is shockless in operation, and gives a choice of driving angle which can be less than the supplement of the angle indexed thus making it suitable for projectors for sub-standard, particularly 16 mm. film.

In the intermittent driving mechanism according to this invention, radial slots in a wheel which are engaged by a driving pin are formed in an annular ring of radial depth less than the penetration of the pin which thus disengages from the wheel inside the annulus; auxiliary means are provided to control the movement of the wheel during this disengagement in order to present to the pin another slot for its withdrawal through the annulus in advance of that through which it entered.

The angle through which the wheel is indexed is thus reduced by the amount of this advance and the driving angle is the supplement of the sum of the angle indexed and the angle of this advance and hence less than the supplement of the angle indexed by the amount of this advance.

In a preferred construction of the mechanism the means to control the wheel during disengagement of the driving pin within the annulus comprise a second pin carried on the same driving member and adapted to engage auxiliary slots in the wheel intermediate to the entry and exit slots of the first pin.

Locking means of any type known in connection with Geneva mechanisms are used to constrain the wheel against rotation when both pins are disengaged from the wheel as, for example, the well known construction comprising a cylindrical surface formed on the driving member, concentric with the axis thereof, and adapted to engage circular recesses formed around the circumference of the wheel, the surface of the cylinder being cut away to release the wheel when it is engaged and indexed by a driving pin.

In order that the invention may be fully understood and readily carried into effect, one specific embodiment thereof will now be described, by way of example only, with reference to the accompanying drawings, wherein:

Fig. 1 illustrates a construction of an intermittent driving mechanism in which a ten station wheel is indexed by a 72° driving angle.

Figs. 2, 3, 4 and 5 are views corresponding to Fig. 1 but with the parts shown in successive configurations, and

Fig. 6 is a sectional plan view on the line A—A of Fig. 3.

Referring now to the figures on the accompanying drawings, a driving disc shown at 1 is mounted on a constantly rotating driving shaft 2 and provided on one face with a pair of driving pins 3 and 4 disposed on a common radius and adapted to engage a slotted wheel 5 on a shaft 6.

The wheel 5 is provided with ten equally spaced slots, the first three of which are numbered 7, 8 and 9 for purposes of reference.

The driving shaft 2 has formed on it a concentric cylindrical cam 11 adapted to engage in circular recesses 12, ten in number, formed around the periphery of the wheel 5 and thus constrain it from rotation. The cam 11 is cut away at 13 in order to release the wheel when the latter is engaged by a pin.

As the shaft 2 rotates in an anti-clockwise direction the pin 3 engages in a slot 7, one of the ten radial slots 7, 8, 9 etc., formed in an annulus 10 on the wheel 5.

The pin 3 enters the slot 7 radially as shown in Fig. 1 simultaneously with the release of the wheel 5 by the cam 11. Continued rotation of the driving member 2 brings the parts into the position shown in Fig. 2. In this figure the pin 4 is seen entering the slot 8 as pin 3 disengages from slot 7 and escapes inside the annulus 10. Continued rotation of the driver carries the parts through the position shown in Fig. 3 to that shown in Fig. 4. Here pin 4 disengages from slot 8 as pin 3 enters at the inner end of the slot 9 in the wheel 5 in advance of the slot 7 by which it first entered the wheel. As rotation of the driver continues, pin 3 withdraws through the slot 9, finally leaving the wheel 5 simultaneously with re-engagement of the cam 11 as shown in Fig. 5. The wheel 5 then remains stationary, locked by the cam until continued rotation of the driver 2 agains enters pin 3 into a slot in the wheel 5.

It will be appreciated that the shaft 6 shown in the accompanying drawings carries a sprocket wheel (not shown) which, in turn, engages and intermittently feeds film through a projector. This projector may be of the sub-standard, 16 mm. film size, as the construction of Geneva mechanism provided by this invention overcomes the disadvantages of such mechanisms when used in relation to sub-standard film projectors as encountered heretofore.

In order that the mechanism shall fulfil this purpose and also so that the indexing by the pins 3 and 4 shall be shock-free, it is necessary that the first pin enters and leaves the slots in the then stationary wheel 5 in the direction of their length and that the transfer of the drive from one pin to the other takes place when the velocity of each, relatively to the wheel 5, is wholly in the direction of their respective slots.

Proportions of parts which satisfy these conditions according to this invention can be determined by calculation, the foregoing description and accompanying drawings describing and illustrating the preferred embodiment of the invention.

In this embodiment the wheel to be indexed in steps, each 1/Nth of a revolution, requires N equally spaced radial slots. This is a reduction to the minimum number of slots which can be used in practice employing a wheel with N stations and utilises three adjacent slots during each intermittent movement of the wheel, the two outer slots for the entry and withdrawal of one pin and the intermediate slot for engagement by the second pin, the first outer slot constituting the intermediate and engagement slot for the second pin of the three adjacent slots during the succeeding intermittent movement of the wheel.

With this preferred arrangement every three adjacent slots comprises one "set" of slots of which each slot serves, in turn, as an outer slot and an intermediate slot although it will be appreciated from consideration of the following that a greater number of slots can be utilized theoretically:

Let 2A be the angle between the outer slots of each set.

Let the intermediate slot of a particular set be at some angle B above the line of centres of wheel and driver and let the driving pin enter radially the outer slot of this set which is at angle $(B+A)$ and withdraw radially from the second outer slot, initially at angle $(B-A)$, after indexing the wheel to carry this slot to angle $(B+A)$ below the line of centres.

The wheel is then indexed through

$$(2(B+A)-2A)=2B$$

whence $B=180°/N$ and, if 2C denote the driving angle,

$$(A+B+C)=90°$$

Angle A can be chosen to reconcile any assigned values of B and C but is preferably chosen so that A and 2B are simple multiples of a common module, i. e., $A=2B.(p/q)$ where p and q are small integers.

If $q=3$ the 3N wheel slots are equally spaced at 120°/N. If $q=2$ the second outer slot of one set coincides with the first outer slot of the next set and the number of slots is reduced from 3N to 2N equally spaced at 180°/N. If $q=1$ and each slot serves both as an outer slot and as an intermediate slot the number of slots is reduced to N equally spaced at 360°/N.

Let d denote the centre distance between wheel and driver, then if r denote the radius to the first driving pin,

$$r=d.\ \sin\ (A+B)$$

and if s denote the radius to entry of the outer slots,

$$s=d.\ \cos\ (A+B)$$

Let E denote the angle between the intermediate slot and the line of centres at transfer of drive between a pin at the inner end of outer slot and a second pin on a common radial of the driver at entry to intermediate slot. Then for shockless transfer:

$$\tan E=2.\ \sec\ (A).\ \sin\ (B/2).\ \cos\ (A+B/2)$$

and if F denote the corresponding angle between the line of centres and the common radius on which line the driving pins,

$$F=90°-(A+2E)$$

and if t denote the radius to disengagement inside the annulus,

$$t=d.\ \cos\ (A+2E).\ \sec\ (E)$$

and if u denote the radius of the second pin,

$$u=d.\ \sin\ (E).\ \sec\ (A+E)$$

and if v denote the radius to entry of the intermediate slot,

$$v=d.\ \cos\ (A+2E).\ \sec\ (A+E)$$

In the specific embodiment of the invention illustrated by the accompanying drawings, the

construction is based upon the following choice of operating condition:

$$B=180°/10=18°,\ A=2B=36°$$

whence $C=36°$.

Hence, by the foregoing formulae: $r=0.809d$; $E=15°\ 17\frac{1}{2}'$; $t=0.412d$; $s=0.588d$; $F=23°\ 25'$; $u=0.422d$, $v=0.635d$, where d=the distance between the axes of the wheel **5** and driving disc **1**.

The operating conditions chosen above are such that each slot serves both as an outer and an intermediate slot. It will be noticed, however, that the radius to entry of the outer pin, s, is $0.588d$ which is less than the radius to entry of the inner pin, v, which is $0.635d$. In order that a common slot may satisfy both these conditions the outer pin **3** is made shorter than the inner pin **4** and the outer surface of the wheel **5** is correspondingly stepped as shown at **12** and **14** in Fig. 6, the pin **3** engaging the wheeel at diameter **12** and the pin **4** engaging it at diameter **14**.

In general, there is a limit to the proportionate diameter of the inner pin **4** in order that this may enter and leave its slot without interference which may, however, be avoided by cutting away the ineffective but interfering portion of the pin as by forming a flat on it as shown at **15**.

I claim:

1. An intermittent driving mechanism of the type including a driving member and a driven member on spaced parallel shafts, the driving member being a disk having a driving pin located eccentrically thereon and extending therefrom parallel to the axis of the driving member and its shaft, and said driven member comprising a wheel having radial slots periodically engaged by said pin; characterised by the feature that said wheel includes an annular ring in which the wheel slots are formed, said annular ring having a radial depth less than the penetration of the pin, whereby the pin disengages from the wheel inside the annular ring, auxiliary means being provided between said driving and driven members to advance the wheel during this disengagement to provide for the pin another slot for its withdrawal through the annular ring in advance of that through which it entered.

2. An intermittent driving mechanism as claimed in claim 1, wherein the auxiliary means comprise a second pin carried by the driving member and adapted to engage a wheel slot intermediate those engaged by the first pin.

3. An intermittent driving mechanism as claimed in claim 2, wherein said pins are at different radial distances from the axis of the driving member and so positioned that the second pin contacts the annular ring of the driven wheel simultaneously with the movement of the first pin out of contact with the annular ring and that the second pin moves out of contact with the annular ring simultaneously with the engagement of the first pin with a wall of its exit slot; whereby the transfer of drive between the pins is effected without mutual interference, shock or loss of control.

4. An intermittent driving mechanism as claimed in claim 3, wherein the wheel has N equally spaced slots and said pins are so positioned with respect to each other and the slot spacing that three adjacent slots are utilised during each intermittent movement of the wheel, the two outer slots for the entry and withdrawal of one pin and the intermediate slot for engagement by the second pin, the first outer slot constituting the intermediate slot engaged by the second pin of the three adjacent slots during the succeeding intermittent movement of the wheel.

5. An intermittent driving mechanism as claimed in claim 4, wherein $N=10$, whereby the driven wheel is advanced 36° by movement of the drive member through 72°.

6. An intermittent driving mechanism as claimed in claim 1, wherein said auxiliary means comprises a second pin on said drive member and engaging a slot intermediate those engaged by the first pin, and the lengths of the two pins are different and the outer circumference of the slotted annular ring is correspondingly stepped to determine the engagement of the pins at different effective radii of the wheel.

7. An intermittent driving mechanism as claimed in claim 1, wherein said auxiliary auxiliary means comprises a second pin on said drive member and radially alined with said first pin.

ROBERT ROBERTSON.

REFERENCES CITED

The following references are of record in the file of this patent:

UNITED STATES PATENTS

Number	Name	Date
498,552	Hunt	May 30, 1893
1,059,276	Collins	Apr. 15, 1913
1,129,121	Power	Feb. 23, 1915
2,049,690	Cunningham	Aug. 4, 1936
2,298,215	Kinker	Oct. 6, 1942