United States Patent

Sitabkhan

[15] **3,664,430**

[45] **May 23, 1972**

[54] **ELECTRICAL MONITOR FOR FIRE EXTINGUISHER**

[72] Inventor: **Abdul N. Sitabkhan,** El Monte, Calif.

[73] Assignee: **HTL Industries, Inc.,** Monrovia, Calif.

[22] Filed: **Oct. 6, 1970**

[21] Appl. No.: **78,440**

[52] **U.S. Cl.** **169/23,** 169/42

[51] **Int. Cl.** **A62c 39/02,** A62c 37/30

[58] **Field of Search** 169/23, 42, 2, 26; 340/227.1; 116/5, 106

[56] **References Cited**

UNITED STATES PATENTS

2,089,369	8/1937	Heckert	169/42 X
2,762,036	9/1956	Triman	116/106 X
3,333,641	8/1967	Hansom et al.	169/23 X

FOREIGN PATENTS OR APPLICATIONS

569,764	4/1924	France	169/2 A

Primary Examiner—M. Henson Wood, Jr.
Assistant Examiner—Edwin D. Grant
Attorney—Jefferson Ehrlich, Tennes I. Erstad and Robert G. Crooks

[57] **ABSTRACT**

Covers a fire extinguisher for use on aircraft. The fire extinguisher includes a container equipped with mechanism for signalling the pilot in the cockpit in the event that the fire extinguishing fluid has been discharged through the safety relief valve of the container. The fire extinguisher is equipped with a thermally responsive material, which is positioned on or adjacent to the surface of the container and is electrically conductive. The material melts when its temperature reaches a predetermined value. The material is wired to the cockpit of the aircraft and the circuitry includes an indicating device, such as a lamp, to indicate instantly to the pilot that the fire extinguisher has been discharged and that, therefore, the fire extinguisher is not suitable for extinguishing a fire.

11 Claims, 7 Drawing Figures

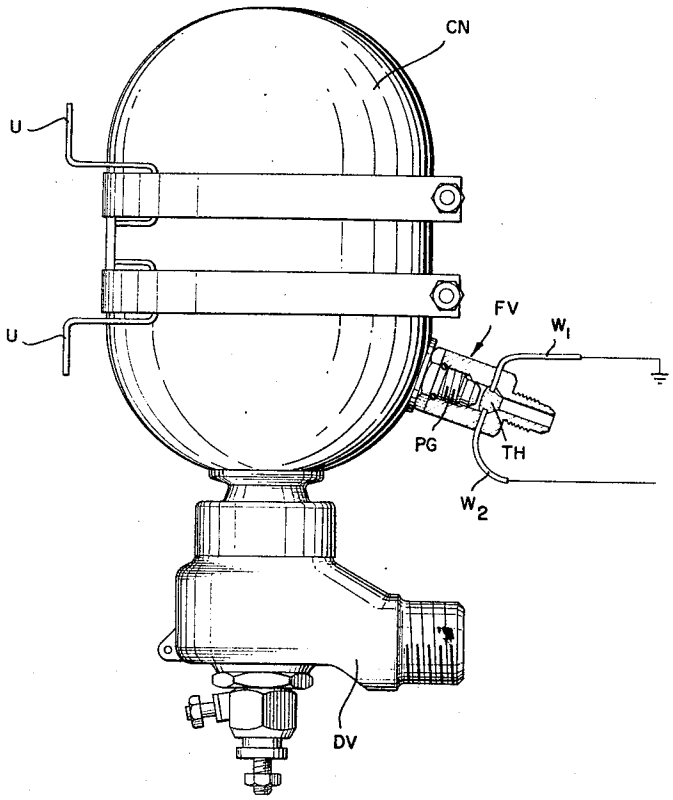

FIG. 1

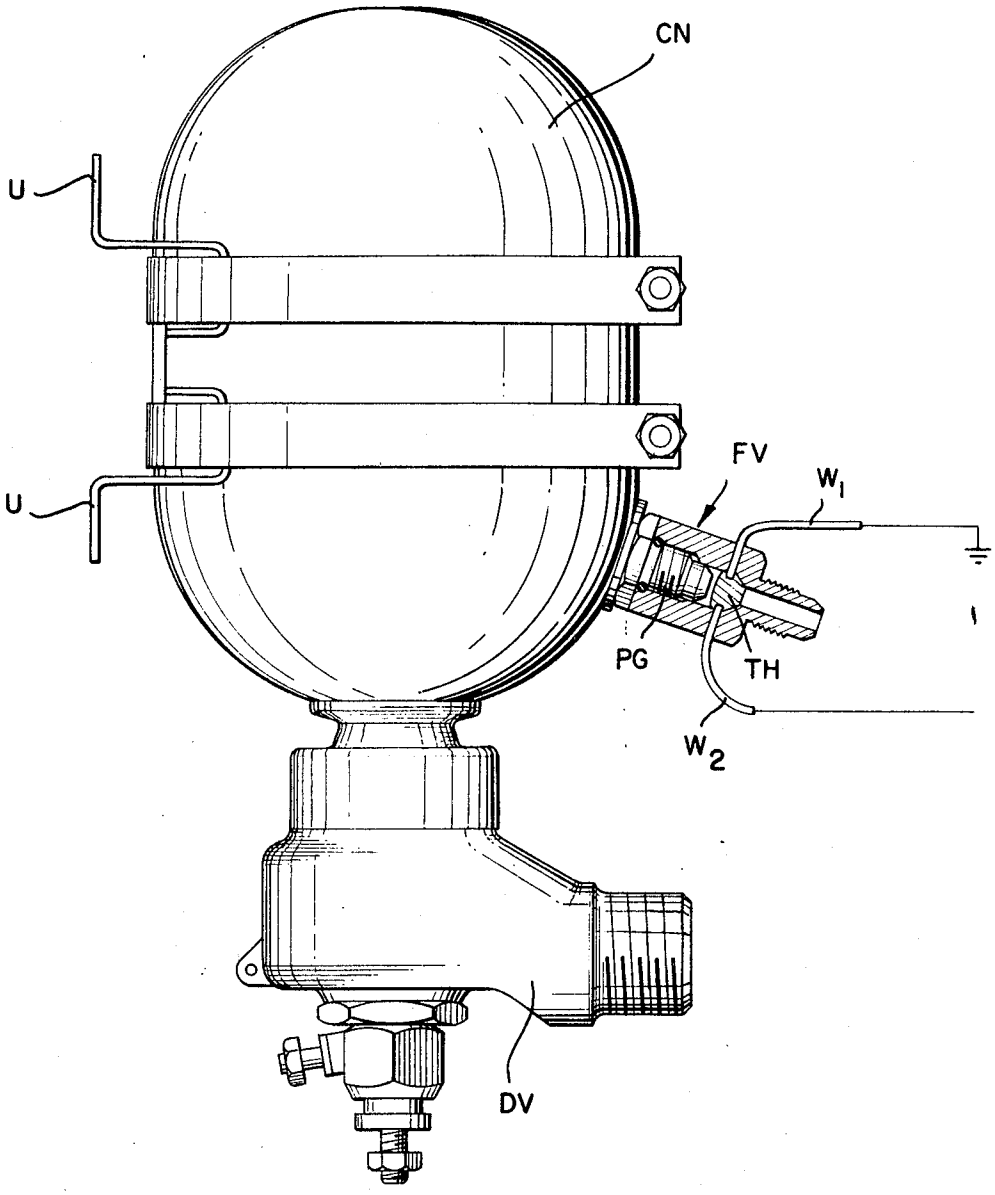

INVENTOR.
ABDUL N. SITABKHAN
BY Jefferson Ehrlich
ATTORNEY

FIG. 2

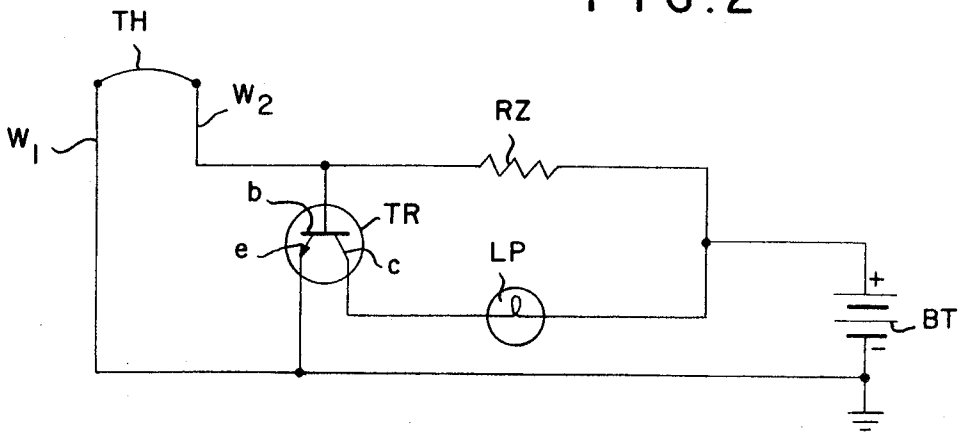

FIG. 5

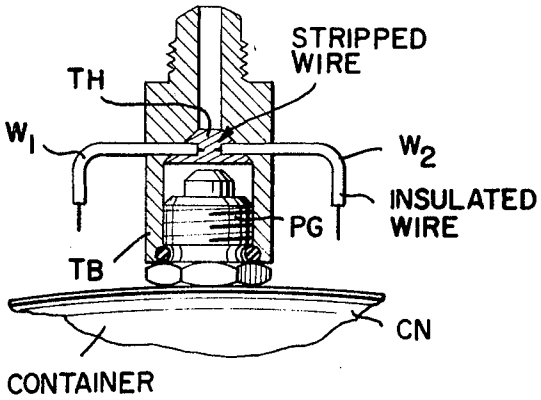

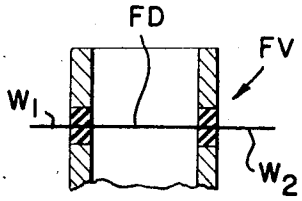

FIG. 6

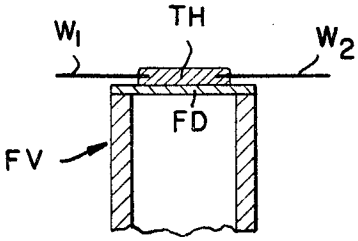

FIG. 7

INVENTOR.
ABDUL N. SITARKHAN
BY Jefferson Ehrlich
ATTORNEY

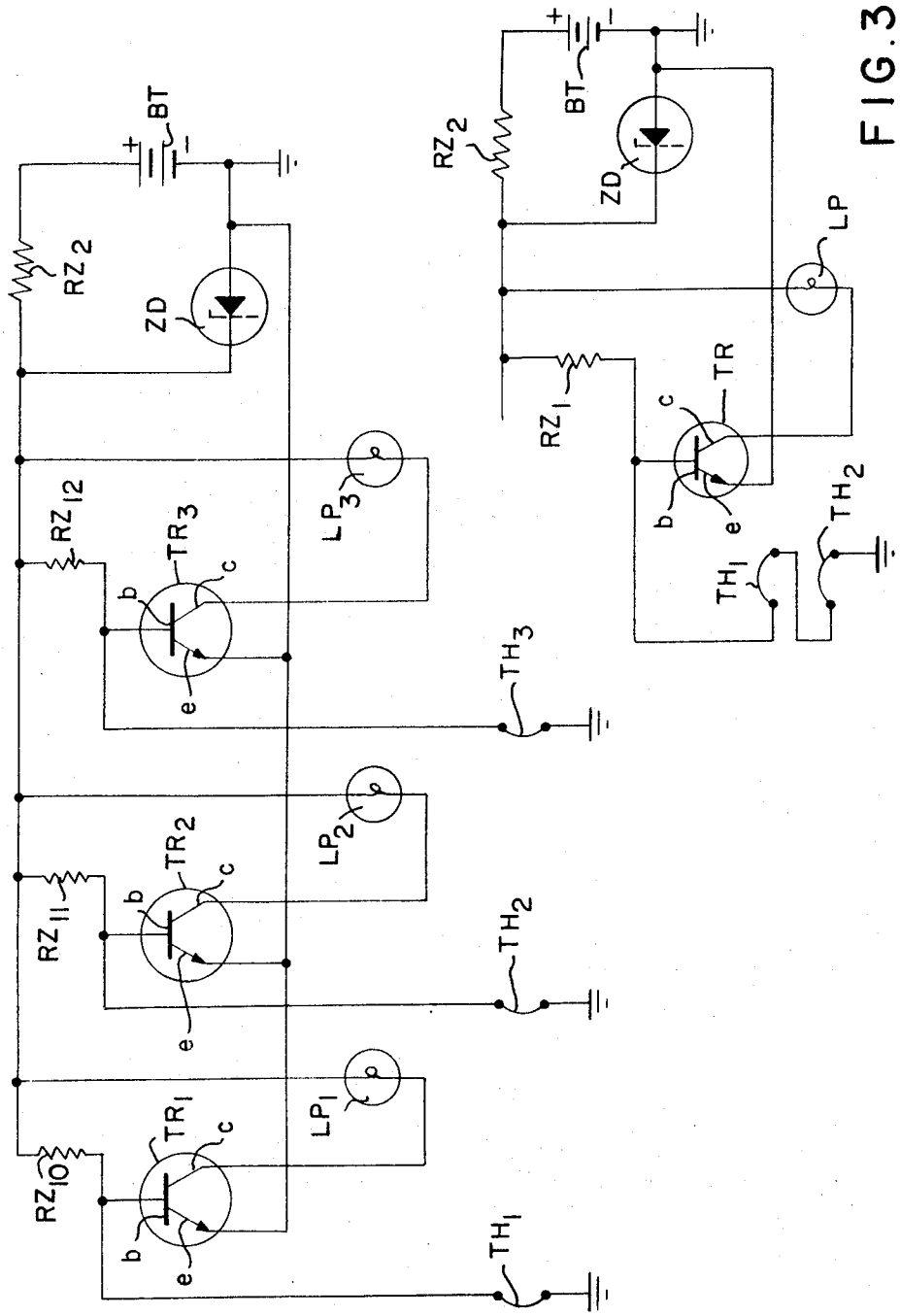

FIG. 4

FIG. 3

INVENTOR.
ABDUL N. SITABKHAN
BY Jefferson Ehrlich
ATTORNEY

ELECTRICAL MONITOR FOR FIRE EXTINGUISHER

This invention relates to fire extinguishers, especially those which are provided for use on aircraft, and to apparatus for instantly determining whether or not the fire extinguisher has discharged its fire extinguishing fluid through its safety relief valve so that the fire extinguisher is no longer capable of extinguishing a fire.

Presently available fire extinguishers suitable for use on aircraft may employ a safety discharge valve equipped with a so-called "burst" disc or with a material set to melt at a predetermined temperature, the disc or the material to be located at or near the periphery of the container of the fire extinguisher. Any increase in the ambient temperature causes a corresponding increase in the pressure of the fire extinguishing fluid within the container. When the pressure within the fire extinguisher should exceed a predetermined value, the disc will be ruptured or severed by the increased pressure to allow the extinguisher to discharge the fire extinguishing fluid or other contents of the container. Likewise, when the temperature of the fire extinguisher becomes abnormally high due, for example, to exposure to the sun or to any other high temperature medium, the rise in temperature of the contents of the extinguisher will melt the thermally responsive material to allow the container to discharge the fire extinguishing fluid therefrom. In either case, should the internal conditions within the extinguisher exceed the predetermined values at which the disc will be ruptured or severed, or at which the thermally responsive material will melt, the contents of the container of the extinguisher will, therefore, be discharged. However, the loss of the fluid contents may occur at a relatively slow rate and be hardly perceptible. Unless this condition is promptly detected and corrected, the leaky extinguisher may have no useful protective purpose aboard the craft. This, naturally, presents a hazardous condition, both for the passengers and crew as well as for the aircraft and is especially hazardous during flight.

A presently available fire extinguisher for use on aircraft embodies an "overboard discharge line" for observing whether or not the fire extinguisher has been discharged. Such equipment usually includes a pipe line interconnection to the relief fitting of the fire extinguisher with a colored disc mounted on the "skin" of the aircraft. Upon an abnormal rise in temperature, the contents of the fire extinguisher will undergo a corresponding rise in the pressure within the extinguisher, so that the contents of the extinguisher will be released through the safety valve and freely transmitted through the discharge line to cause the colored disc to be expelled. Unfortunately, the colored disc is remote from the cockpit and is therefore not visible to the pilot of the aircraft. It would be undesirable and indeed dangerous to have the contents of the fire extinguisher discharged into the cockpit if the discharge line were instead connected between the fire extinguisher and the cockpit. The only way presently available to detect the discharged condition of the fire extinguisher is by having an officer walk around the craft after it has landed at its assigned airport, and spot the absence of the discharge disc. If the colored discharge disc is found in its normal position on the skin of the aircraft where it is readily observable because of its color, the officer will be satisfied that the fire extinguisher remains in good working condition. If there should be a leak in the discharge line extending to the colored disc, then the inoperativeness of the fire extinguisher would not be detected because the colored disc will remain in its normal condition in its normal place. On the other hand, if the discharge port is open because the colored disc is absent, the officer may observe the absence and then alert the ground maintenance staff that the specified fire extinguisher needs repair or replacement. This will delay the operation of an aircraft on its next leg of the trip. The inoperativeness of the fire extinguisher may have occurred near the beginning of the prior trip and unfortunately was unknown to the crew. Such situations should be avoided and can be minimized or avoided by the present invention.

In order to overcome the present unsatisfactory condition created by having an overboard discharge line extending to a colored disc which is observable only from a grounded position, the present invention is provided to make available simple and inexpensive mechanism whereby the condition of the fire extinguisher may be automatically and promptly indicated to the pilot in the cockpit while the craft remains in flight and even verified before the flight is initiated. This may be accomplished, for example, by employing a thermally responsive material or a blowout disc in or near the safety relief valve of the fire extinguisher. The thermal device may be any suitable thermally responsive material provided either in the safety valve of the container or on or in an additional fitting mounted on the safety valve, the thermal material serving as a sensing device. The blowout disc may be any suitable burst disc provided for the safety valve of the container or an additional disc designed to blow at a predetermined pressure. Obviously, the burst disc may be ruptured by the exiting fluids as the pressure rises due to sufficiently elevated ambient temperatures. Likewise, the thermally responsive material may be so arranged that it will melt sufficiently at a predetermined temperature to allow the contents of the fire extinguisher to be discharged upon a predetermined rise in the ambient temperature. Obviously, the blowout disc is to be ruptured or severed when the fluid is discharged through the safety valve. The thermally responsive material or the the blowout disc, whichever is employed, should preferably be electrically conductive and be connected through an electrical circuit extending into the cockpit, the interconnected circuit including an indicating device, such as a lamp. When the thermally responsive material has been partially or fully melted and hence the contents of the fire extinguisher discharged through the gap provided by the melted material, or when the blown disc has been ruptured and the fluid contents discharged through the safety valve, the indicating device located in the cockpit will promptly indicate to the pilot that the fire extinguisher is not in operative condition and requires attention. If there are ten or more fire extinguishers in an aircraft, such as a 747 Boeing aircraft, there may be 10 different indicating devices positioned in the cockpit, each associated with a selected one of the fire extinguishers, so that the pilot may at all times observe the conditions of all the fire extinguishers on the aircraft. Such an arrangement will obviate any requirement for observing from the ground the physical condition of the several discs that may be associated with the skin of the aircraft. Inspection of all fire extinguishers is available to all members of the crew at all times while in the cockpit. Should a failure develop in any of the fire extinguishers, the pilot may relay a message to the next landing point to have the fire extinguisher repaired or refilled or replaced and this can be accomplished promptly upon the landing of the aircraft and save much valuable time.

Accordingly, it is one of the principal objects of this invention to provide mechanism for promptly determining the operative condition of any or all of the fire extinguishers associated with an aircraft or other vehicles while it remains in motion.

Another of the objects of this invention is to provide indicating apparatus for a fire extinguisher, the indicating apparatus to include a temperature responsive fusible material or a blowout disc mounted on or near or in the safety discharge valve of the fire extinguisher container and conductively connected to an indicating device, such as a lamp, so that, upon the partial or complete melting of the fusible material or the rupture of the blowout disc, the indicating device will be operated or rendered operative and will indicate instantly and continuously that the fire extinguisher is not suitable for rendering fire extinguishing service.

This invention together with its other objects and features will be better and more clearly understood from the following more complete description and explanation when read in connection with the accompanying drawing in which:

FIG. 1 illustrates a cross-sectional view of one form of extinguisher assembly that may be used in the practice of this in-

vention, this figure illustrating a container which utilizes a thermally responsive material for its safety relief.

FIG. 2 shows a circuit diagram for a single fire extinguisher.

FIG. 3 shows a schematic wiring diagram for two fire extinguishers equipped according to this invention where a single cockpit indication is desired.

FIG. 4 illustrates a schematic circuit drawing for three or a plurality of fire extinguishers arranged according to this invention.

FIG. 5 illustrates a fitting for a fire extinguisher's container suitable for the practice of the invention, the fitting providing for the employment of an overboard discharge line if such line is necessary or desirable to prevent over-pressurization of the compartment in which the extinguisher is mounted.

FIG. 6 schematically illustrates a cross-sectional view of a portion of a safety relief valve employing a blowout disc which may be wired to the cockpit or other indicating point.

FIG. 7 schematically illustrates a cross-sectional view of a segment of a safety relief valve having therein a blowout disc to which a thermally responsive material is affixed.

The same or similar reference characters will be employed throughout the drawing, wherever they may occur, to designate the same or similar parts.

Referring to the drawing, and referring especially to FIG. 1 of the drawing, there is shown, for illustration, a metallic or plastic container CN constituting a housing for receiving and encasing fire extinguishing and other materials, usually in the form of liquids or gases or both. The container CN may embody a plurality of mounting or supporting brackets, each designated U, along with appropriate hardware, such as bolts and nuts (not shown) for retaining and holding the container CN on appropriately shaped stationary brackets (not shown) within an airplane or within a compartment of an airplane or other vehicle. A plurality of like containers, such as CN, may be affixed to different segments of an airplane and, if desired, one container may be located adjacent to and associated with an engine of the airplane and, if there is more than one engine, a separate container may be associated with each engine.

The container CN may have two main valves, one a filler valve FV which includes a thermally responsive material for its safety relief and the other a discharge valve DV. The filler valve may be employed to receive, through an opening therein, the liquids or gases or both to be inserted into the container CN and maintained at a suitable pressure, perhaps between 600 and 2,700 psi. The discharge valve DV may be employed for discharging the contents of container CN upon the breakage of a disc therein; or the discharge valve DV may enclose a housing which mechanically holds a sealing pug in position. Breakage may be accomplished by a cartridge type of device (not shown).

Another form of container suitable for fire extinguishing service, to which the features of the present invention may be applied, is shown and described in an application of J.R. Fiero, Ser. No. 735,093, filed June 6, 1968, now U.S. Pat. No. 3,552,495 and assigned to the assignee of the present application. The container CN may be hermetically sealed, and its valves FV and DV may also be hermetically sealed, to prevent the leakage of the pressurized contents of container CN. When sealed, the nozzle of the discharge valve DV should preferably be pointed at the object, i.e., the engine, to be protected against fire. The valve DV may be equipped with a cartridge of appropriate explosive material and wired to the central point or to the cockpit where a switch may be operated by a member of the crew to initiate a shock wave, or a plurality of shock waves, to rupture the enclosed disc or the sealing lug so that the contents of the container CN may be discharged to suppress or extinguish a fire. As described and explained in the above specified patent application, the materials to be inserted into the container CN may include freon 1301, nitrogen gas to charge or super-charge the freon, and an inert gas, such as helium, to serve as a non-odorous tracer to be detectable by, for example, a mass spectograph.

The filler valve FV includes a frangible disc (not shown) for functioning as a relief valve. The valve FV may include or house additionally, in accordance with this invention, a blowout disc, which is electrically conductive, into which two separate insulated conductors W1 and W2 are inserted. The ends of the conductors W1 and W2 are spaced from each other so that the conductive disc alone provides the operative conductive path between the two conductors. For an alternative additional illustration, FIG. 1 shows, instead of a blowout disc, a thermally responsive conductive material TH into which the two conductors W1 and W2 are inserted for connection to indicating equipment to be described.

FIG. 2 shows an alarm circuit which may be interconnected between the terminals of the thermally responsive material TH of FIG. 1, shown also in FIG. 2, and the cockpit of the aircraft (or to the conductive blowout disc described with respect to FIG. 1). The device TH may or may not be part of the container CN, being positioned at or near or in the safety valve of the container, while a lamp LP or other indicator may be located in the cockpit. The device TH may be connected between the base *b* and the emitter *e* of a transistor TR, while the lamp LP may be connected between the collector *c* and the negative or grounded terminal of a battery BT or other source of dc voltage. A resistor RZ may be connected between the base *b* and the positive terminal of battery BT.

The device TH allows a small current to flow in the path established via resistor RZ to battery BT. This continuous loop holds transistor TR in a non-conductive state. However, when the device the TH partially or completely melted or ruptured, due to a rise in the ambient temperature, the transistor TR will become conductive. A substantial current will then flow from battery BT through the emitter and collector electrodes e and c and lamp LP, illuminating lamp LP. This lamp LP, when lighted, will be readily visible to the pilot and other members of the crew. The lamp LP will remain lighted until the affected (or discharged) container is replaced or refilled and a new sensor element TH is attached.

The device TH may be any appropriate fusible material which is normally conductive electrically, such as cerrobend. Such a material may yield and begin melting at a temperature of about 205°–220° F. Such a temperature will melt the material sufficiently so as to break open the circuit between conductors W1 and W2.

The pressure of the fluids within container CN, although maintained at an assigned value when the container is filled and sealed, rises as the ambient temperature increases. In order to protect the fire extinguisher against inordinate internal pressure increases due to inordinate ambient temperature rises, the safety valve on the container CN relieves the inordinate pressure by discharging the contents of the container. The thermally responsive material TH or the blow-out disc, will be melted or ruptured at or above a predetermined pressure reaching the safety valve. This breaks the previously established loop between conductors W1 and W2. The break in the loop allows the transistor to become conductive and lamp LP will be lighted. These two events will occur substantially simultaneously, and the crew will be instantly apprised of the unavailability of the particular fire extinguisher. The pilot may then radio the next landing field to inform its maintenance crew that the fire extinguisher needs repair or replacement.

Although the lamp LP is a visible indicator, it will be apparent that a buzzer or other audible indicator may be substituted therefor or, if desired, connected in series with the visible indicator LP. In any case, the audible indicator, such as a buzzer, will indicate audibly to the pilot that a non-operative condition associated with the corresponding container has developed and that container CN cannot be relied upon for fire extinguishing service.

In the arrangement of FIG. 2 the transistor TR may be an RCA 40361 transistor and the source may be a 28 volt DC power supply. The resister RZ may be a 47 Kohm, ½ watt device.

FIG. 3 schematically illustrates a circuit arrangement shown for the use of the invention in connection with a pair of fire extinguishers. The devices TH1 and TH2, whether they be thermally responsive and conductive devices or conductive blowout discs, would be associated with independent fire extinguisher containers, such as container CN of FIG. 1. In the FIG. 3 arrangement, however, the two devices TH1 and TH2 are connected in series with each other in a path which includes the base *b* and the emitter e of the transistor TR. The lamp LP is connected between the collector c of the transistor TR and the point common to the resistors RZ1 and RZ2. The latter resistors are also connected in series with each other between the base b of transistor TR and the positive terminal of the source of direct voltage BT, the negative terminal of which is grounded. A Zener diode is bridged across the circuit of resistor RZ.

The two elements TH1 and TH2 together provide a continuous loop to maintain transistor TR in a non-conductive state, but this state is maintained only as long as both devices TH1 and TH2 remain intact, i.e. neither device has been melted or ruptured by the exiting fluid. Under these conditions, the flow of current from the source BT will be minimal and insufficient to illuminate lamp LP. On the other hand, when either of the containers, with which the devices TH1 and TH2 are associated, become subject to rather high temperature, i.e. temperatures exceeding a predetermined magnitude, the thermal device which is subjected to the extraordinary temperature will be melted or ruptured. Upon the removal of the disabled device TH the lamp LP will be fed sufficient current to illuminate it, thereby apprising the pilot in the cockpit that one of the two containers with which the devices TH1 and TH2 are associated has failed and therefore lost its fire extinguishing ability. The Zener diode ZD will serve to restrict the voltage that may be applied to the path between the base *b* and emitter *e* of transistor TR.

The FIG. 3 arrangement employs a single indicating device, i.e., lamp LP, the signify a loss of fire extinguishing fluid from one two supplemental containers. These containers may be located adjacent to each other near a single engine, for example.

FIG. 4 schematically illustrates another modification in which individual lamps LP1, LP2 and LP3 will correspond to individual fire extinguishers which have the devices TH1, TH2 and TH3 associated with them. Each element, such as TH1, is associated with its individual transistor, such as TR1. Each element TH1 maintains the corresponding transistor in a non-conductive state. Thus, if the element TH1 is melted by the excessive temperature or ruptured by the pressurized exiting fluids so that the associated container is disabled, the transistor TR1 will become conductive, thereby causing lamp LP1 to become illuminated. Likewise, lamps LP2 and LP3 will become illuminated when these elements TH2 and TH3 become melted or ruptured due to excessive thermal conditions in the vicinity of the respective fire extinguisher containers. Obviously, additional parallel circuits, each including a device such as TH1, a transistor such as TR1, and a lamp such as LP1 may be joined to the overall arrangement to increase the scope of coverage available to the pilot in observing the condition of the fire extinguishers throughout the aircraft. Each lamp will signify to the observer the particular fire extinguisher that happens to be rendered useless.

This invention will eliminate the so-called overboard discharge lines now conventionally used in connection with aircraft fire extinguishers. Consequently, there will be no requirement for blow-out discs at the terminal end of the overboard discharge lines. Furthermore, it will be unnecessary to have an officer inspect the various blow-out discs upon reaching an airport to observe, from the ground, the condition of the several fire extinguishers on board. Instead, the cockpit service people can observe and monitor the condition of all of the fire extinguisher equipments throughout the craft while the craft remains aloft.

A key feature of the circuit involves the close, proportional relation between the ambient temperature in the region of the container CN and the pressure of the gas within the container. As the temperature of the ambient air rises, the pressure within the container will rise proportionately, especially if the gas is freon. A suitable alloy material will respond as indicated when properly proportioned and arranged so that it will melt as the temperature reaches a predetermined value.

FIG. 5 illustrates a fitting for a container suitable for the practice of this invention. The fitting includes a threaded base TB in which the thermal responsive material or blow-out disc, as the case may be, may be mounted. The threaded base TB may be meshed with a corresponding projection PG on the surface of the container CN. Insulated conductors or any other forms of insulation are utilized to insulate conductors W1 and W2 from the fitting. The only conductive path between conductors W1 and W2 is provided either by the material TH or by the blow-out disc. It will be observed, as in the other figures of the drawing, that the device TH may be connected by conductors W1 and W2 to electrical circuitry of the kinds shown in FIGS. 2, 3 and 4 to indicate whether or not the device TH has been melted or ruptured.

FIG. 6 shows a segment of a safety relief valve FV of a container such as CN. This arrangement shows a blowout disc FD, preferably made of a conductive material, and the disc FD may be wired by conductors W1 and W2 as a continuous element extending to the indicator of the indicating equipment of the kinds shown in FIGS. 2, 3 and 4 of the drawing. The indicator will indicate whether or not the disc FD has been severed from valve FV and the fluid within the container CN is discharging or has discharged.

On the other hand, FIG. 7 illustrates schematically a safety relief valve FV which includes a blowout disc FD as well as a thermally responsive material TH superimposed upon the disc FD and arranged as a unitary combined structure. The thermally responsive material TH may be wired, by spaced conductors W1 and W2, to indicating circuits of the kinds shown in FIGS. 2, 3 and 4. In this case, the disc FD may be made of plastic or metallic materials, preferably non-conductive materials, but the thermally responsive element TH is bonded or otherwise affixed to the disc FD by any well known process or by any suitable adhesive.

In the FIG. 7 arrangement, the disc FD may be severed from the valve FV whenever the internal pressure within the container CN exceeds a predetermined value. When this happens, the contents of the container will be discharged. On the other hand, as the ambient temperature reaches a predetermined value—which is dependent upon the particular thermally responsive material of which the element TH is made and its dimensions—the disc FD will remain affixed to the valve FV but the thermal element TH will be melted to break the continuity of the path between the conductors W1 and W2. Thus, the indicator in the cockpit of the aircraft will be operated to indicate that a dangerous condition is about to develop aboard the craft.

If desired, the melting temperature of the element TH may be predetermined to be below the temperature corresponding to the internal pressure of the fluids within the container CN for severing the disc FD. Hence, a signal will be delivered to the cockpit before the contents of the container CN are discharged. This arrangement provides an early warning signal of a condition that requires careful attention for fire protection.

As will be apparent, the thermal material TH will begin melting when its melting point is reached and very soon provide an aperture through which the fire extinguishing fluid contents of the container CN will be discharged. When the blowout disc TH is ruptured by the exiting fluids, the lamp LP corresponding to the container CN will register that the fire extinguisher is discharging its protective fluid. Hence, the pilot will be alerted promptly upon the elevation of the ambient temperature that a condition requiring correction is under development and he may take the appropriate steps for the protection of the personnel and craft.

Although the thermal material, such as TH may be a Cerro alloy, any appropriate fusible material or device may be employed in the practice of this invention. The blow-out disc may be made of metal or of any other electrically conductive tape, such as Scotch X-1181, which will burst at relatively low pressure.

While this invention has been shown and described in certain arrangements for illustration and explanation, it will be apparent that the invention may be arranged in widely diverse organizations suitable for carrying out the objectives of this invention.

What is claimed is:

1. The combination of a sealed container housing a fire extinguishing fluid, a thermally responsive, electrically conductive material positioned at or adjacent to the periphery of the container, said material being responsive to the ambient temperature and being melted upon reaching a predetermined temperature to release the fire extinguishing fluid, and indicating means electrically connected to said material to promptly respond to the melting of said material.

2. The combination of claim 1 in which the thermally responsive material is conductively connected to the indicating means over a continuous circuit which is opened upon the melting of said material.

3. The combination of claim 1 which includes a visual indicator electrically connected to the thermally responsive material and electrically disconnected from said material when the material is melted.

4. The combination of a sealed container housing a fire extinguishing fluid, a thermally responsive, electrically conductive material positioned at or adjacent to the periphery of the container, said material, when melted, releasing said fluid, a transistor having base, emitter and collector electrodes, said material being conductively connected between the base and emitter electrodes, a source or voltage, an indicator connected in series between the collector electrode and the source of voltage, and a resistor connected between the base electrode and the terminal common to the indicator and the source of voltage, the indicator monitoring the electrical continuity of said material, whereby the status of the fluid within the housing is observable.

5. The combination of claim 4 in which the thermally responsive material will be melted either in response to a rise in the pressure within the sealed container to a predetermined value or a rise in the ambient temperature to a different predetermined value.

6. Apparatus for continually monitoring the condition of a fire extinguisher having a container housing a fire extinguishing fluid, comprising a safety valve on the surface of the container, a thermally responsive, electrically conductive material inserted in said safety valve, and an indicating mechanism wired to two separated points of said material so that said material provides continuity in the circuit to the indicating mechanism, whereby said mechanism will indicate the continuity of said material, said material having a melting point at which the fire extinguishing fluid will be discharged from the container through said safety valve.

7. Apparatus according to claim 6 in which the thermally responsive material will melt at a temperature which corresponds to a maximum allowable pressure within the container.

8. The combination of a sealed container using a fire extinguishing fluid, a safety valve positioned adjacent to the surface of said container, a conductive material positioned in said safety valve, said material being normally continuous electrically but being severed and rendered discontinuous in response to pressure within the container exceeding a predetermined value or when the ambient temperature exceeds a predetermined value, and electrical circuitry connected in series with said material and indicating the severance of said material, the fire extinguishing fluid being released from said container upon the severance of said material.

9. The combination of claim 8 in which the conductive material is in the form of a thermally responsive, electrically conductive substance which is severed upon the ambient tempera-ture reaching a predetermined value.

10. The combination of claim 8 in which the conductive material is in the form of a conductive tape which is severed in response to an abnormal pressure within the container.

11. The combination of a sealed container housing a fire extinguishing fluid, a safety valve adjacent to the surface of said container, a pressure sensitive disc made of conductive material and positioned within said safety valve, and an electrical circuit connected to said disc so that said disc forms a serial element of said circuit, said disc being punctured in response to a rise in the pressure of said container above a predetermined value, so that the fire extinguishing fluid may be discharged through the opening provided by said punctured disc, whereby the electrical circuit will continuously monitor the condition of the fire extinguishing fluid within said container.

* * * * *