(12) STANDARD PATENT (11) Application No. **AU 2010261248 B2**
(19) AUSTRALIAN PATENT OFFICE

(54) Title
Rotary compressor

(51) International Patent Classification(s)
F04C 29/02 (2006.01) ***F04C 29/06*** (2006.01)
F04C 18/32 (2006.01)

(21) Application No: **2010261248** (22) Date of Filing: **2010.06.15**

(87) WIPO No: **WO10/146837**

(30) Priority Data

(31) Number	(32) Date	(33) Country
2009-143242	**2009.06.16**	**JP**

(43) Publication Date: **2010.12.23**
(44) Accepted Journal Date: **2014.03.06**

(71) Applicant(s)
Daikin Industries, Ltd.

(72) Inventor(s)
Shimizu, Takashi;Hori, Kazutaka;Higashi, Hirofumi

(74) Agent / Attorney
Spruson & Ferguson, L 35 St Martins Tower 31 Market St, Sydney, NSW, 2000

(56) Related Art
JP 06-167287 A
JP 63-097895 A
JP 2005-113766 A
JP 08-219070 A
JP 06-346878 A

(12) 特許協力条約に基づいて公開された国際出願

(19) 世界知的所有権機関
国際事務局

(43) 国際公開日
2010 年 12 月 23 日(23.12.2010)

PCT

(10) 国際公開番号
WO 2010/146837 A1

(51) 国際特許分類:
F04C 29/02 (2006.01) *F04C 29/06* (2006.01)
F04C 18/32 (2006.01)

(21) 国際出願番号: PCT/JP2010/003972

(22) 国際出願日: 2010 年 6 月 15 日(15.06.2010)

(25) 国際出願の言語: 日本語

(26) 国際公開の言語: 日本語

(30) 優先権データ:
特願 2009-143242 2009 年 6 月 16 日(16.06.2009) JP

(71) 出願人 (米国を除く全ての指定国について): ダイキン工業株式会社 (DAIKIN INDUSTRIES, LTD.) [JP/JP]; 〒5308323 大阪府大阪市北区中崎西２丁目４番１２号 梅田センタービル Osaka (JP).

(72) 発明者; および

(75) 発明者/出願人 (米国についてのみ): 清水孝志 (SHIMIZU, Takashi) [JP/JP]; 〒5918511 大阪府堺市北区金岡町１３０４番地ダイキン工業株式会社 堺製作所 金岡工場内 Osaka (JP). 堀和貴 (HORI, Kazutaka) [JP/JP]; 〒5918511 大阪府堺市北区金岡町１３０４番地ダイキン工業株式会社堺製作所 金岡工場内 Osaka (JP). 東洋文 (HIGASHI, Hirofumi) [JP/JP]; 〒5918511 大阪府堺市北区金岡町１３０４番地ダイキン工業株式会社堺製作所 金岡工場内 Osaka (JP).

(74) 代理人: 前田弘, 外 (MAEDA, Hiroshi et al.); 〒5410053 大阪府大阪市中央区本町２丁目５番７号 大阪丸紅ビル Osaka (JP).

(81) 指定国 (表示のない限り、全ての種類の国内保護が可能): AE, AG, AL, AM, AO, AT, AU, AZ, BA, BB, BG, BH, BR, BW, BY, BZ, CA, CH, CL, CN, CO, CR, CU, CZ, DE, DK, DM, DO, DZ, EC, EE, EG, ES, FI, GB, GD, GE, GH, GM, GT, HN, HR, HU, ID, IL, IN, IS, KE, KG, KM, KN, KP, KR, KZ, LA, LC, LK, LR, LS, LT, LU, LY, MA, MD, ME, MG, MK, MN, MW, MX, MY, MZ, NA, NG, NI, NO, NZ, OM, PE, PG, PH, PL, PT, RO, RS, RU, SC, SD, SE, SG, SK, SL, SM, ST, SV, SY, TH, TJ, TM, TN, TR, TT, TZ, UA, UG, US, UZ, VC, VN, ZA, ZM, ZW.

(84) 指定国 (表示のない限り、全ての種類の広域保護が可能): ARIPO (BW, GH, GM, KE, LR, LS, MW, MZ, NA, SD, SL, SZ, TZ, UG, ZM, ZW), ユーラシア (AM, AZ, BY, KG, KZ, MD, RU, TJ, TM), ヨーロッパ (AL, AT, BE, BG, CH, CY, CZ, DE, DK, EE, ES, FI, FR, GB, GR, HR, HU, IE, IS, IT, LT, LU, LV, MC, MK, MT, NL, NO, PL, PT, RO, SE, SI, SK, SM, TR), OAPI (BF,

[続葉有]

(54) **Title**: ROTARY COMPRESSOR

(54) 発明の名称 : 回転式圧縮機

[図2]

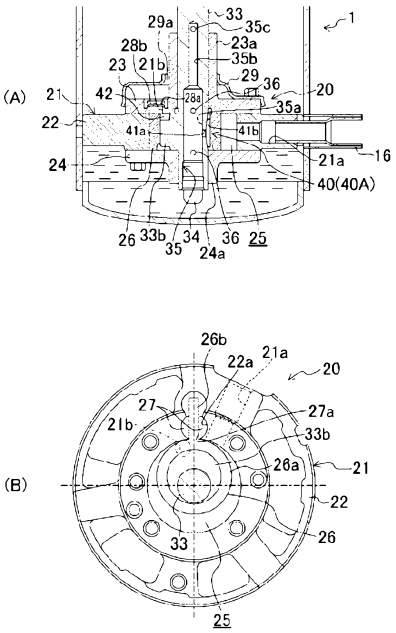

(57) **Abstract**: Disclosed is a high-pressure dome-type rotary compressor (1) provided with an oil supply path (40) for supplying oil into a discharge port (21b), wherein the vibration and noise caused by the re-expansion of the high-pressure gas that remains in a discharge outlet of a compression mechanism (20) are reduced by means of a simple structure.

(57) 要約: 高圧ドーム式の回転式圧縮機（1）において、吐出ポート（21b）の内部へ油を供給する油供給経路（40）を設け、圧縮機構（20）の吐出口に残留する高圧ガスの再膨張により発生する振動や騒音を簡単な構成で低減する。

WO 2010/146837 A1

BJ, CF, CG, CI, CM, GA, GN, GQ, GW, ML, MR, NE, SN, TD, TG).

添付公開書類:

— 国際調査報告（条約第 21 条(3)）

DESCRIPTION

ROTARY COMPRESSOR

TECHNICAL FIELD

The present invention relates to rotary compressors, particularly to a technology of reducing vibration and noise caused by high pressure gas which remains in a discharge port of a compression mechanism for compressing gas in a cylinder chamber when a discharge process is finished, and returns to the cylinder chamber to re-expand therein in a next compression process.

BACKGROUND ART

In conventional rotary compressors, for example, a cylinder chamber is divided into a low pressure chamber and a high pressure chamber by a blade. The low and high pressure chambers are switched to become the high and low pressure chambers, respectively, in accordance with the operation of a compression mechanism. Thus, a suction process in the low pressure chamber, and a compression process and a discharge process in the high pressure chamber are simultaneously performed, thereby compressing low pressure gas, and discharging high pressure gas. In the rotary compressors of this type, the high pressure gas remaining in a discharge port when the discharge process is finished returns to the low pressure cylinder chamber, and re-expands therein when a next compression process is started. This causes significant pressure pulsation near the discharge port. A rotary compressor including a mechanism for reducing vibration and noise caused by the pressure pulsation has been proposed (see, e.g., Patent Document 1).

The rotary compressor of Patent Document 1 includes a high pressure fluid injection mechanism for injecting high pressure fluid in a cylinder chamber through a high

2010261248 24 Jan 2014

pressure fluid passage opened in the cylinder chamber after a suction port of a compression mechanism is completely closed by a piston.

In the compressor of Patent Document 1, the high pressure fluid injection mechanism brings the high pressure fluid (high pressure oil) into contact with gas which re-expanded and caused high frequency pulsation in the hermetic cylinder chamber to cause interference between the high frequency pulsation and high pressure, thereby reducing the high frequency pulsation. This can reduce vibration and noise caused by the high frequency pulsation.

CITATION LIST

PATENT DOCUMENT

[Patent Document 1] Japanese Patent Publication No. H08-219051

In the compressor of Patent Document 1, the high pressure fluid injection mechanism is always open in the hermetic cylinder chamber. Thus, an amount of the oil fed to the cylinder chamber cannot easily be reduced, and an excessive amount of the high pressure oil may be fed to the low pressure cylinder chamber immediately after the suction port is completely closed. This is because this mechanism tends to be affected by a differential pressure.

There exists a need to reduce vibration and noise caused by the high pressure gas which remains in the discharge port of the compression mechanism when the discharge process is finished, and re-expands in the low pressure cylinder chamber when the next compression process is started, and preventing excessive feeding of the oil to the cylinder chamber.

OBJECT OF THE INVENTION

It is the object of the present invention to substantially overcome at least ameliorate one or more of the above disadvantages, or address the above discussed need.

SUMMARY OF THE INVENTION

The present invention provides a high pressure dome type rotary compressor comprising:

a casing;

2010261248 24 Jan 2014

a crank shaft extending in a vertical direction, the crank shaft having an eccentric part, and the casing having a bottom at a lower end of the crank shaft; and

a compression mechanism disposed in the casing, the compression mechanism including a rotary compression mechanism having a piston arranged to revolve in a cylinder along an inner peripheral surface of the cylinder chamber when the crank shaft having the eccentric part is rotated to compress gas in a cylinder chamber defined by the piston and cylinder, the compression mechanism having a discharge port and a discharge valve, the discharge valve being opened in a discharge process and closed during a period from when the discharge process is finished to when a next compression process is started, and a single cycle of operation of the compression mechanism is a 360° rotation of the crank shaft,

the compressor being arranged and configured such that high pressure gas discharged from the discharge port in the discharge process is discharged outside the casing through space in the casing, and

the crank shaft and the discharge port being shaped and located to define an oil feed path that feeds lubricant oil contained in the bottom of the casing to an inside of the discharge port, the oil feed path being

open to the inside of the discharge port as the crankshaft rotates through a first rotation angle range of the 360° rotation of the crank shaft, and

closed to the inside of the discharge port as the crankshaft rotates through a second rotation angle range of the 360° rotation of the crank shaft, the second rotation angle range being different from the first rotation range.

According to an embodiment of the invention, low pressure gas is compressed to become high pressure gas by the operation of the compression mechanism. The high pressure gas which is discharged from the discharge port of the compression mechanism to the inside of the casing of the compressor in the discharge process to fill the space in the casing is discharged outside the casing. When the rotary compressor is used to perform a compression stroke of a refrigeration cycle by circulating a refrigerant, the refrigerant goes through a condensation stroke, an expansion stroke, and an evaporation stroke, and then is sucked again to the compression mechanism for compression.

In the rotary compressor, a volume of the cylinder chamber is alternately increased and decreased during the operation of the compression mechanism. The refrigerant is sucked when the volume of the cylinder chamber is increased, and is compressed and discharged when the

2010261248 24 Jan 2014

volume of the cylinder chamber is decreased. In the present invention, the oil is fed to the discharge port in the period from the point in time in the discharge process to when the compression process is started while the compression mechanism is operated. When the discharge process of the compression mechanism is finished, the discharge port is closed by the discharge valve. Thus, the oil is kept contained in the discharge port until the following compression process is started. Then, the oil in the discharge port flows into the cylinder chamber when the next compression process is started. The oil does not expand even when the pressure in the cylinder chamber is reduced, and the compression process is started. This can reduce the occurrence of pulsation.

Preferably, the oil feed path is configured to feed the oil to the inside of the discharge port in a period from the point in time in the discharge process to when the discharge process is finished.

According to an embodiment of the invention, the oil is present in the discharge port when the discharge process is finished. The oil in the discharge port flows into the cylinder chamber when the next compression process is started. This can prevent the occurrence of the pulsation even when the pressure in the cylinder chamber is reduced, and the next compression process is started.

Preferably, the oil feed path is configured to feed the oil to the inside of the discharge port in a period from when the discharge process is finished to when the compression process is started.

According to an embodiment of the invention, the oil in the discharge port flows into the cylinder chamber when the compression process is started after the discharge process is finished. Since the oil in the discharge port flows into the cylinder chamber, the occurrence of the pulsation can be reduced even when the pressure in the cylinder chamber is reduced, and the next compression process is started.

Preferably, a single cycle of operation of the compression mechanism is a 360° rotation, and provided that a reference position for the rotation lies between a position at which the discharge process of the compression mechanism is finished, and a position at which the compression process of the compression mechanism is started, and a rotation angle of the

2010261248 24 Jan 2014

reference point is 0°, the oil feed path is configured to feed the oil to the inside of the discharge port when the rotation angle is in a range between 315° and 45°.

The rotation angle in the above range corresponds to the period from the point in time in the discharge process to when the following compression process is started while the compression mechanism is operated. Thus, in the same manner according to the first to third aspects of the invention, the oil in the discharge port flows into the cylinder chamber when the compression process is started after the discharge process is finished. This can prevent the occurrence of the pulsation even when the pressure in the cylinder chamber is reduced, and the next compression process is started.

Preferably, a top dead center position of the piston forms a rotation angle reference point of 0°,

a position at which the discharge process of the compression mechanism is finished is at a rotation angle approaching about 330° relative to the rotation angle reference point,

a position at which the compression process of the compression mechanism is started is at a rotation angle of about 45° relative to the rotation angle reference point, and

the oil feed path being configured to feed the oil to the inside of the discharge port when as the first rotation angle range is in a range between 315° and 45° relative to the rotation angle reference point.

Preferably, the oil feed path directly communicates with an oil sump provided in the bottom of the casing and the discharge port to feed the oil from the oil sump to the discharge port.

According to an embodiment of the invention, the oil is fed from the oil sump to the discharge port of the compression mechanism through the direct oil feed path while the compression mechanism is operated. Then, the oil present in the discharge port when the discharge process is finished flows into the low pressure cylinder chamber when the compression process of the compression mechanism is started. This can reduce the occurrence of the pulsation due to the re-expansion of the high pressure gas.

Preferably, the rotary compressor further includes: an oil stirring mechanism for stirring the oil contained in the oil sump in accordance with the rotation of the compression mechanism,

2010261248 24 Jan 2014

the oil stirring mechanism including a stirring impeller attached to the lower end of the crank shaft to rotate therewith.

According to an embodiment of the invention, a refrigerant dissolved in the oil is foamed, and is separated from the oil by stirring the oil contained in the oil sump. Thus, the oil in which almost no refrigerant is dissolved is fed to the discharge port.

Preferably, the eccentric part defines a recess formed therein, the recess defining part of the oil feed path, and the oil is introduced in the recess, and

the recess is configured to communicate with the discharge port of the compression mechanism as the crankshaft rotates through the first rotation angle range.

According to an embodiment of the invention, the crank shaft is rotated, and the piston revolves in the cylinder chamber while the piston compression mechanism is operated. At this time, the recess formed in the eccentric part of the crank shaft also revolves about the center of the crank shaft, and the recess communicates with the discharge port of the compression mechanism in the above-described range of the rotation angle. Since the oil is introduced to the recess, the oil flows from the recess to the discharge port when the recess communicates with the discharge port. Thus, the oil present in the discharge port at this time is introduced to the cylinder chamber when the compression process of the compression mechanism is started.

Preferably, the discharge port includes a through hole which is defined by a part of the compression mechanism, and the through hole is arranged to partially overlap the recess as the crankshaft rotates through the first rotation angle range.

According to an embodiment of the invention, the discharge port is formed to partially overlap the revolving recess when the rotation angle is in the range where the oil is fed to the inside of the discharge port. Thus, the recess communicates with the discharge port in the above-described range of the rotation angle while the compression mechanism is operated. Since the oil is introduced to the recess, the oil flows from the recess to the discharge port. Thus, the oil present in the discharge port when the discharge process is finished is introduced to the low pressure cylinder chamber when the compression process of the compression mechanism is started.

2010261248 24 Jan 2014

Preferably, the discharge port includes a through hole defined by a part of the compression mechanism, and the through hole is located radially outward from an orbit in which the recess revolves, and

the oil feed path includes a notch through defined by an end face of the piston, the notch defining part of the oil feed path, and the recess communicates with the inside of the discharge port through the notch as the crankshaft rotates through the first rotation angle range.

Preferably, the discharge port is formed with a through hole which is shifted radially outward from an orbit in which the recess revolves, and a notch through which the discharge port communicates with the recess when the rotation angle is in the range where the oil is fed to the inside of the discharge port is formed in an end face of the piston.

According to an embodiment of the invention, the discharge port is formed with the through hole which is shifted radially outward from the orbit in which the recess revolves, and the notch through which the discharge port communicates with the recess when the rotation angle is in the range where the oil is fed to the inside of the discharge port is formed in the end face of the piston. Thus, while the compression mechanism is operated, the recess communicates with the discharge port in a predetermined range of the rotation angle of the recess revolving about the center of the crank shaft. Since the oil is introduced to the recess, the oil flows from the recess to the discharge port. Thus, the oil present in the discharge port when the discharge process is finished is introduced to the low pressure cylinder chamber when the compression process of the compression mechanism is started.

Preferably, the discharge port includes a through hole defined by a part of the compression mechanism. and the through hole is located radially outward from an orbit in which the recess revolves, and

the part of the compression mechanism further defines a notch extending from the through hole, the notch defining part of the oil feed path, and the recess communicates with the inside of the discharge port through the notch as the crankshaft rotates through the first rotation angle range.

According to an embodiment of the invention, the discharge port is formed with the through hole which is shifted radially outward from the orbit in which the recess revolves, and the notch through which the discharge port communicates with the recess when the rotation

2010261248 24 Jan 2014

angle is in the range where the oil is fed to the inside of the discharge port is formed in the discharge port. Thus, while the compression mechanism is operated, the recess communicates with the discharge port in a predetermined range of the rotation angle of the recess revolving about the center of the crank shaft. Since the oil is introduced to the recess, the oil flows from the recess to the discharge port. Thus, the oil present in the discharge port when the discharge process is finished is introduced to the low pressure cylinder chamber when the compression process of the compression mechanism is started.

Preferably, the oil feed path indirectly communicates the oil from an oil sump provided in the casing to the discharge port through the inside of the compression mechanism (for example through sliding surfaces and/or the cylinder chamber).

According to an embodiment of the invention, the oil feed path introduces the oil from the oil sump provided in the casing to the inside of the compression mechanism (the sliding surfaces and the cylinder chamber) while the compression mechanism is operated. The oil is intermittently pushed into the inside of the discharge port from the inside of the compression mechanism while the compression mechanism is operated. Thus, the oil is present in the discharge port in the period from when the discharge process is finished to when the next compression process is started. Since the oil is introduced to the discharge port through the inside of the compression mechanism, the oil feed path functions as the indirect oil feed path. The oil present in the discharge port when the discharge process is finished is introduced to the low pressure cylinder chamber when the compression process of the compression mechanism is started.

Preferably, the rotary compressor further includes: an oil stirring mechanism for stirring the oil contained in the oil sump in accordance with the rotation of the compression mechanism, further comprising:

an oil stirring mechanism arranged to stir the oil contained in the oil sump in accordance with rotation of the compression mechanism, the oil stirring mechanism including a stirring impeller attached to the lower end of the crank shaft to rotate therewith.

According to an embodiment of the invention, a refrigerant dissolved in the oil is foamed, and is separated from the oil by stirring the oil contained in the oil sump. Thus, the oil in which almost no refrigerant is dissolved is fed to the discharge port.

2010261248 24 Jan 2014

Preferably, the compression mechanism includes a communicating groove defined by a part of the compression mechanism, the communicating groove has an end opened in a sliding surface of the compression mechanism and an other end opened in the cylinder chamber as the crankshaft rotates through the first rotation angle range to introduce the oil fed to the sliding surface of the compression mechanism to the cylinder chamber.

According to an embodiment of the invention, while the compression mechanism is operated, the sliding surface of the compression mechanism communicates with the cylinder chamber through the communicating groove in the predetermined range of the rotation angle corresponding to the period between the compression process and the discharge process, thereby feeding the oil from the sliding surface to the cylinder chamber. The oil is pushed into the discharge port as the volume of the cylinder chamber is reduced. Thus, the oil is present in the discharge port when the compression process is started after the discharge process is finished. Since the oil is introduced to the discharge port in this way, the oil feed path functions as the indirect oil feed path. Thus, the oil present in the discharge port when the discharge process is finished is introduced to the low pressure cylinder chamber when the compression process of the compression mechanism is started.

Preferably, the compression mechanism includes an oil containing recess defined by an inner wall surface of the cylinder chamber to temporarily contain the oil fed from the oil sump to the cylinder chamber.

According to an embodiment of the invention, while the compression mechanism is operated, the oil is introduced from the oil sump provided in the casing to the cylinder chamber of the compression mechanism through the oil feed path, and the oil is contained in the oil containing recess. The oil in the oil containing recess is pushed into the discharge port, which is the only destination of the oil, when the volume of the cylinder chamber is reduced. Thus, the oil is present in the discharge port in the period from when the discharge process is finished to when the next compression process is started. Since the oil is introduced to the discharge port through the cylinder chamber, the oil feed path functions as the indirect oil feed path. The oil present in the discharge port when the discharge process is finished is introduced to the low pressure cylinder chamber when the compression process of the compression mechanism is started.

2010261248 24 Jan 2014

Preferably, the oil containing recess is defined by an axial end face of the cylinder chamber, the oil containing recess being opened/closed by the piston in such a manner that the oil containing recess is exposed from an end face of the piston in the period from when the discharge process is finished to when the compression process is started, is covered with the end face of the piston before the discharge process is started, and communicates with sliding surfaces of the crank shaft and the piston during the discharge process.

According to an embodiment of the invention, the position of the oil containing recess is determined. Thus, the oil containing recess is covered with the end face of the piston when the discharge process is started, and the oil containing recess communicates with the sliding surfaces of the crank shaft and the piston in the discharge process to contain the oil therein. The oil is then discharged to the cylinder chamber when the suction port is completely closed. The oil is contained in the discharge port as the compression process proceeds. Thus, the oil present in the discharge port when the discharge process is finished is introduced to the low pressure cylinder chamber when the compression process of the compression mechanism is started.

Preferably, an oil introducing hole is defined by the cylinder, and the oil sump in the casing communicates with the cylinder chamber of the compression mechanism through the oil introducing hole.

According to an embodiment of the invention, the oil is introduced from the oil sump provided in the casing to the cylinder chamber of the compression mechanism through the oil introducing hole. The oil introduced to the cylinder chamber is pushed into the discharge port, which is the only destination of the oil, when the volume of the cylinder chamber is reduced. Thus, the oil is present in the discharge port in the period from when the discharge process is finished to when the next compression process is started. Since the oil is introduced to the discharge port through the cylinder chamber, the oil feed path functions as the indirect oil feed path. When the compression process of the compression mechanism is started, the oil present in the discharge port at this time is introduced to the low pressure cylinder chamber.

Preferably, the rotary compression mechanism includes a blade integrated with the piston to form a swing piston, and a suction port of the rotary compression mechanism and the discharge port are arranged to sandwich the blade therebetween, and

2010261248 24 Jan 2014

a slit is defined by a side surface of the blade on a discharge port side, a back pressure chamber is defined on a back surface of the blade, and the back pressure chamber communicates with the cylinder chamber through the slit.

According to an embodiment of the invention, the oil is introduced from the back pressure chamber to the discharge port through the slit. Thus, the oil is present in the discharge port in the period from when the discharge process is finished to when the next compression process is started. Since the oil is introduced to the discharge port through the cylinder chamber, the oil feed path functions as the indirect oil feed path. The oil present in the discharge port when the discharge process is finished is introduced to the low pressure cylinder chamber when the compression process of the compression mechanism is started.

According to an embodiment the present invention, when the compression process of the compression mechanism is started, the oil in the discharge port flows into the cylinder chamber of the compression mechanism, and the oil does not expand at this time. This can reduce the occurrence of the pulsation due to the re-expansion. According to the invention, the oil is fed to the discharge port, thereby preventing excessive feeding of the oil to the cylinder chamber where the compression process is started. Still according to the invention, the oil is introduced to the discharge port in the period from the point in time in the discharge process to when the compression process is started, and the lubricant oil fed to the compression mechanism can be used as the oil to be introduced to the discharge port. This can simplify the configuration, and can reduce the cost of the compressor.

According to an embodiment of the invention, as described above, the oil in the discharge port flows into the cylinder chamber when the compression process is started, and the occurrence of the pulsation in the low pressure cylinder chamber can be reduced. This can also prevent the excessive feeding of the oil to the cylinder chamber where the compression process is started. Use of the lubricant oil fed to the compression mechanism can simplify the configuration, and can reduce the cost of the compressor.

According to an embodiment of the invention, while the compression mechanism is operated, the oil fed from the oil sump to the discharge port of the compression mechanism through the direct oil feed path flows into the cylinder chamber when the compression process of the compression mechanism is started. Thus, the occurrence of the pulsation due to the re-

2010261248 24 Jan 2014

expansion of the high pressure gas can be reduced. This can simplifies the configuration in the same manner as the first to fourth aspects of the invention, and can prevent the excessive feeding of the oil to the cylinder chamber.

According to an embodiment of the invention, the refrigerant dissolved in the oil is foamed, and is separated from the oil by stirring the oil contained in the oil sump. Thus, the oil in which almost no refrigerant is dissolved is fed to the discharge port. This can reduce the refrigerant flowing from the discharge port to the cylinder chamber when the compression process is started, thereby effectively reducing the occurrence of the pulsation.

According to an embodiment of the invention, while the compression mechanism is operated, the recess formed in the eccentric part of the crank shaft revolves about the center of the crank shaft, and the recess communicates with the discharge port of the compression mechanism in the above-described range of the rotation angle. Since the oil is introduced to the recess, the oil flows from the recess to the discharge port when the recess communicates with the discharge port. Thus, the oil present in the discharge port is introduced to the low pressure cylinder chamber when the compression process of the compression mechanism is started. Thus, according to the present invention, the recess to which the oil is introduced is configured to communicate with the discharge port. This simple configuration can reduce the occurrence of the pulsation due to the re-expansion of the high pressure gas.

According to an embodiment of the invention, the discharge port is formed to partially overlap the recess when the rotation angle is in the range where the oil is fed to the inside of the discharge port, and the recess communicates with the discharge port in the above-described range of the rotation angle while the compression mechanism is operated. Since the oil is introduced to the recess, the oil flows from the recess to the discharge port. Thus, the oil present in the discharge port when the discharge process is finished is introduced to the low pressure cylinder chamber when the compression process of the compression mechanism is started. The simple configuration, i.e., forming the recess in the eccentric part of the crank shaft, can reduce the occurrence of the pulsation due to the re-expansion of the high pressure gas.

According to an embodiment of the invention, the discharge port is formed with the through hole which is shifted radially outward from the orbit in which the recess revolves, and the notch through which the discharge port communicates with the recess when the rotation

2010261248 24 Jan 2014

angle is in the range where the oil is fed to the inside of the discharge port is formed in the end face of the piston. Thus, when the recess revolves about the center of the crank shaft while the compression mechanism is operated, the recess communicates with the discharge port in the above-described range of the rotation. Since the oil is introduced to the recess, the oil flows from the recess to the discharge port. Thus, the oil present in the discharge port when the discharge process is finished is introduced to the low pressure cylinder chamber when the compression process of the compression mechanism is started. The simple configuration, i.e., forming the recess in the eccentric part of the crank shaft, and communicating the recess with the discharge port through the notch when the oil is fed to the inside of the discharge port, can reduce the occurrence of the pulsation due to the re-expansion of the high pressure gas.

According to an embodiment of the invention, the discharge port is formed with the through hole which is shifted radially outward from the orbit in which the recess revolves, and the notch through which the discharge port communicates with the recess when the rotation angle is in the range where the oil is fed to the inside of the discharge port is formed in the discharge port. Thus, when the recess revolves about the center of the crank shaft while the compression mechanism is operated, the recess communicates with the discharge port in the above-described range of the rotation. Since the oil is introduced to the recess, the oil flows from the recess to the discharge port. Thus, the oil present in the discharge port when the discharge process is finished is introduced to the low pressure cylinder chamber when the compression process of the compression mechanism is started. The simple configuration, i.e., forming the recess in the eccentric part of the crank shaft, and communicating the recess with the discharge port through the notch in the range of the rotation angle where the oil is fed to the inside of the discharge port, can reduce the occurrence of the pulsation due to the re-expansion of the high pressure gas.

According to an embodiment of the invention, the recess is formed only in part of the periphery of the eccentric part in such a manner that discharge port and the recess communicate with each other in the range of the rotation angle where the oil is fed to the inside of the discharge port of the compression mechanism. Thus, the oil can intermittently be fed to the discharge port.

According to an embodiment of the invention, while the compression mechanism is operated, the oil is fed from the oil sump provided in the casing to the inside of the compression

2010261248 24 Jan 2014

mechanism (the sliding surfaces and the cylinder chamber) through the oil feed path. The oil is intermittently pushed into the discharge port in accordance with the operation of the compression mechanism. Thus, the oil is present in the discharge port in the period from when the discharge process is finished to when the next compression process is started. Since the oil is introduced to the discharge port through the inside of the compression mechanism, the oil feed path functions as the indirect oil feed path. The oil present in the discharge port when the discharge process is finished is introduced to the low pressure cylinder chamber when the compression process of the compression mechanism is started. The simple configuration, i.e., introducing the oil to the discharge port through the cylinder chamber, can reduce the occurrence of the pulsation due to the re-expansion of the high pressure gas.

According to an embodiment of the invention, the refrigerant dissolved in the oil is foamed, and is separated from the oil by stirring the oil contained in the oil sump, thereby feeding the oil in which almost no refrigerant is dissolved to the discharge port. This can reduce the refrigerant flowing from the discharge port to the cylinder chamber when the compression process is started, thereby effectively reducing the occurrence of the pulsation.

According to an embodiment of the invention, while the compression mechanism is operated, the sliding surface of the compression mechanism communicates with the cylinder chamber through the communicating groove in the predetermined range of the rotation angle corresponding to the period between the compression process and the discharge process, thereby feeding the oil from the sliding surface to the cylinder chamber. The oil is pushed into the discharge port as the volume of the cylinder chamber is reduced. Thus, the oil is present in the discharge port in the period from when the discharge process is finished to when the next compression process is started. Since the oil is introduced to the discharge port in this way, the oil feed path functions as the indirect oil feed path. When the compression process of the compression mechanism is started, the oil present in the discharge port at this time is introduced to the low pressure cylinder chamber. The simple configuration, i.e., introducing the oil to the cylinder chamber through the communicating groove, can reduce the occurrence of the pulsation due to the re-expansion of the high pressure gas.

According to an embodiment of the invention, while the compression mechanism is operated, the oil is introduced from the oil sump provided in the casing to the cylinder chamber of the compression mechanism through the oil feed path, and the oil is contained in the oil

2010261248 24 Jan 2014

containing recess. The oil in the oil containing recess is pushed into the discharge port, which is the only destination of the oil, when the volume of the cylinder chamber is reduced. Thus, the oil is present in the discharge port in the period from when the discharge process is finished to when the next compression process is started. Since the oil is introduced to the discharge port through the cylinder chamber, the oil feed path functions as the indirect oil feed path. When the compression process of the compression mechanism is started, the oil present in the discharge port at this time is introduced to the low pressure cylinder chamber. The simple configuration, i.e., introducing the oil to the cylinder chamber, and containing the oil in the oil containing recess, can reduce the occurrence of the pulsation due to the re-expansion of the high pressure gas.

According to an embodiment of the invention, the oil which is discharged in the cylinder chamber when the suction port is completely closed is contained in the discharge port as the compression process proceeds. When the compression process of the compression mechanism is started, the oil present in the discharge port at this time is introduced to the low pressure cylinder chamber. This can reduce the occurrence of the pulsation due to the re-expansion of the high pressure gas.

According to an embodiment of the invention, while the compression mechanism is operated, the oil is introduced from the oil sump provided in the casing to the cylinder chamber of the compression mechanism through the oil introducing hole. The oil introduced to the cylinder chamber is pushed into the discharge port, which is the only destination of the oil, when the volume of the cylinder chamber is reduced. Thus, the oil is present in the discharge port in the period from when the discharge process is finished to when the next compression process is started. Since the oil is introduced to the discharge port through the cylinder chamber, the oil feed path functions as the indirect oil feed path. The oil present in the discharge port when the discharge process is finished is introduced to the low pressure cylinder chamber when the compression process of the compression mechanism is started. The simple configuration, i.e., introducing the oil to the cylinder chamber through the oil introducing hole, can reduce the occurrence of the pulsation due to the re-expansion of the high pressure gas.

According to an embodiment of the invention, while the compression mechanism is operated, the oil is introduced from the back pressure chamber to the discharge port through the slit. Thus, the oil is present in the discharge port in the period from when the discharge process is finished

2010261248 24 Jan 2014

to when the next compression process is started. Since the oil is introduced to the discharge port through the cylinder chamber, the oil feed path functions as the indirect oil feed path. When the compression process of the compression mechanism is started, the oil present in the discharge port at this time is introduced to the low pressure cylinder chamber.

2010261248 24 Jan 2014

[THIS PAGE INTENTIONALLY LEFT BLANK]

[THIS PAGE INTENTIONALLY LEFT BLANK]

2010261248 24 Jan 2014

[THIS PAGE INTENTIONALLY LEFT BLANK]

2010261248 24 Jan 2014

2010261248 24 Jan 2014

The simple configuration, i.e., introducing the oil to the discharge port through the slit, can reduce the occurrence of the pulsation due to the re-expansion of the high pressure gas.

According to an embodiment of the invention, the oil is not directly introduced from the oil sump to the cylinder chamber after the suction port is completely closed, but is introduced to the cylinder chamber through the discharge port. This can prevent excessive feeding of the oil to the cylinder chamber.

BRIEF DESCRIPTION OF THE DRAWINGS

[FIG. 1] FIG. 1 is a vertical cross-sectional view of a rotary compressor according to a first embodiment of the present invention.

[FIG. 2] FIG. 2(A) is a cross-sectional view illustrating a major part of the rotary compressor of FIG. 1, and FIG. 2(B) shows an internal structure of a compression mechanism.

[FIG. 3] FIG. 3 is a graph illustrating a change in pressure in a cylinder chamber which increases or decreases in response to a change in rotation angle of a piston, and a displacement of a discharge valve.

[FIG. 4] FIGS. 4(A) and 4(B) show a rotary compressor according to a first alternative of the first embodiment, FIG. 4(A) is a vertical cross-sectional view illustrating a major part of the rotary compressor, and FIG. 4(B) shows an internal structure of a compression mechanism.

[FIG. 5] FIGS. 5(A) and 5(B) show a rotary compressor according to a second alternative of the first embodiment, FIG. 5(A) is a vertical cross-sectional view illustrating a major part of the rotary compressor, and FIG. 5(B) shows an internal structure of a compression mechanism.

[FIG. 6] FIGS. 6(A) and 6(B) show a rotary compressor according to a second embodiment, FIG. 6(A) is a vertical cross-sectional view illustrating a major part of the rotary

compressor, and FIG. 6(B) shows an internal structure of a compression mechanism.

[FIG. 7] FIGS. 7(A) to 7(C) show a rotary compressor according to an alternative of the second embodiment, FIG. 7(A) is a vertical cross-sectional view illustrating a major part of the rotary compressor, FIG. 7(B) shows an internal structure of a compressor mechanism in a first state, and FIG. 7(C) shows an internal structure of the compressor mechanism in a second state.

[FIG. 8] FIGS. 8(A)-8(H) are cross-sectional views illustrating how a piston revolves.

[FIG. 9] FIGS. 9(A) and 9(B) show a rotary compressor according to a third embodiment, FIG. 9(A) is a vertical cross-sectional view illustrating a major part of the rotary compressor, and FIG. 9(B) shows an internal structure of a compression mechanism.

[FIG. 10] FIGS. 10(A) and 10(B) show a rotary compressor according to a fourth embodiment, FIG. 10(A) is a vertical cross-sectional view illustrating a major part of the rotary compressor, and FIG. 10(B) shows an internal structure of a compression mechanism.

[FIG. 11] FIGS. 11(A) and 11(B) show a rotary compressor according to a fifth embodiment, FIG. 11(A) is a vertical cross-sectional view illustrating a major part of the rotary compressor, and FIG. 11(B) is a bottom view partially illustrating a compression mechanism.

DESCRIPTION OF EMBODIMENTS

Embodiments of the present invention will be described in detail with reference to the drawings.

[First Embodiment of the Invention]

FIG. 1 is a vertical cross-sectional view illustrating a rotary compressor (1) according to a first embodiment. The compressor (1) performs a compression stroke for compressing a refrigerant in a vapor compression refrigeration cycle. As shown in the

drawings, the compressor (1) includes a casing (10) in the shape of a vertical cylinder, and a compression mechanism (20) and a drive mechanism (30) arranged in the casing (10). The compression mechanism (20) is arranged in a lower part in the casing (10), and the drive mechanism (30) is arranged in an upper part in the casing (10). The drive mechanism (30) is formed with an electric motor for driving the compression mechanism (20).

The casing (10) includes a barrel (11) which is in the shape of a vertical cylinder having upper and lower open ends, an upper end plate (12) fixed to the barrel (11) to close the upper opening of the barrel (11), and a lower end plate (13) fixed to the barrel (11) to close the lower opening of the barrel (11). An oil sump (14) for containing oil (refrigeration machine oil) is formed in a lower end of the casing (10). Oil level (15) of the oil sump (14) is determined at a height where a lower part of the compression mechanism (20) is immersed in the oil.

A suction pipe (16) is provided in a lower part of the barrel (11) of the casing (10) to correspond to the compression mechanism (20). A discharge pipe (17) is provided substantially in the center of the upper end plate (12) of the casing (10) to pass along a center line of the casing (10) extending in an axial direction thereof. The compressor (1) is configured as a high pressure dome type compressor (1) which discharges high pressure gas discharged from the compression mechanism (20) outside the casing (10) through space in the casing (10).

The electric motor (30) includes a stator (31) and a rotor (32). The stator (31) includes a cylindrical stator core (31a) formed by stacking electromagnetic steel sheets, and a coil (31b) wound around the stator core (31a). An outer peripheral surface of the stator core (31a) of the stator (31) is fixed to the barrel (11) by welding or shrink-fitting above the compression mechanism (20) in the barrel (11) of the casing (10). The rotor (32) includes a rotor core (32a) formed by stacking electromagnetic steel sheets, and a permanent magnet

(32b) attached to the rotor core (32a). The rotor (32) is arranged inside the stator (31) to form a uniform and fine radial gap between an outer peripheral surface of the rotor (32) and an inner peripheral surface of the stator (31) (the gap is exaggerated in the drawing).

A drive shaft (33) (a crank shaft) is fixed to an inner peripheral surface of the rotor (32). The drive shaft (33) includes a main shaft (33a), and an eccentric part (33b) formed below the center of the main shaft (33a) in the axial direction. A diameter of the eccentric part (33b) is larger than a diameter of the main shaft (33a), and the center of the eccentric part (33b) is eccentric from the center of the main shaft (33a).

The compression mechanism (20) is formed with a swing compression mechanism (20), which is one of revolving compression mechanisms. FIG. 2(A) is a vertical cross-sectional view illustrating a major part of the compressor (1), particularly illustrating a vertical cross-section of the compression mechanism (20), and FIG. 2(B) shows an inner structure of the compression mechanism (20) when viewed in plan. As shown in the drawings, the compression mechanism (20) includes a cylinder (21) having a cylinder chamber (25), and a swing piston (26) configured to be able to revolve in the cylinder chamber (25) along an inner peripheral surface of the cylinder chamber (25).

The cylinder (21) includes a substantially annular cylinder body (22) fixed to the barrel (11) of the casing (10), a front head (23) fixed to an upper surface of the cylinder body (22) shown in FIG. 2(A), and a rear head (24) fixed to a lower surface of the cylinder body (22) shown in FIG. 2(A). The front head (23) is fixed to the upper surface of the cylinder body (22) with a fastening member such as a bolt, and the rear head (24) is fixed to the lower surface of the cylinder body (22) with a fastening member such as a bolt. Space defined by the cylinder body (22), the front head (23), and the rear head (24) constitutes the cylinder chamber (25).

The eccentric part (33b) of the drive shaft (33) is located in the cylinder chamber

(25). The swing piston (26) is attached to the eccentric part (33b). The swing piston (26) is slidably fitted to an outer peripheral surface of the eccentric part (33b). The front head (23) and the rear head (24) include bearings (23a, 24a) for rotatably supporting the main shaft (33a) of the drive shaft (33), respectively. The swing piston (26) is configured in such a manner that an outer peripheral surface of the swing piston (26) is substantially in contact with an inner peripheral surface of the cylinder chamber (25) with an oil film interposed therebetween when the drive shaft (33) is rotated.

The swing piston (26) is formed by integrating an annular oscillating piston body (26a) which is fitted to the eccentric part (33b) of the drive shaft (33), and a blade (26b) extending radially outward from the oscillating piston body (26a). The cylinder body (22) includes a swing bush (27) for supporting the blade (26b) in such a manner that the blade (26b) is able to swing. The swing bush (27) is formed with a pair of members, each of which is substantially semicircular when viewed in section, and has substantially the same thickness as the cylinder body (22). The paired members are supported in a bush supporting recess (22a) formed in the cylinder body (22) with their flat surfaces facing each other. A blade groove (27a) is formed between the flat surfaces of the paired members of swing bush (27), and the blade (26b) of the swing piston (26) is slidably supported in the blade groove (27a). A back pressure chamber is formed radially outside the bush supporting recess (22a).

In the above-described configuration, when the drive shaft (33) of the compression mechanism (20) is rotated, the swing bush (27) oscillates, the blade (26b) moves back and forth in the blade groove (27a) of the swing bush (27), and the swing piston (26) revolves in the cylinder chamber (25) along the inner peripheral surface of the cylinder chamber (25). Thus, the compression mechanism (20) is configured as the above-described swing compression mechanism (20) in which the swing piston (26) revolves in the cylinder (21) while the blade (26b) oscillates when the drive shaft (33) having the eccentric part (33b) is

rotated.

A suction port (21a) is formed in the cylinder body (22) of the cylinder (21), and the suction pipe (16) is connected to the suction port (21a). A discharge port (21b) is formed in the front head (23) of the cylinder (21), and a lower opening of the discharge port (21b) is opened in the cylinder chamber (25). A discharge valve (28a) which is a reed valve, and a valve guard (28b) for controlling a lift of the discharge valve are provided in an upper opening of the discharge port (21b). A discharge cover (29) (a discharge muffler) is attached to an upper surface of the front head (23) to cover the discharge port (21b). The discharge cover (29) includes a discharge recess (29a) formed between an internal end thereof and the bearing (23a) of the front head (23).

An oil feed pump (34) which is immersed in the oil in the oil sump (14) is provided at a lower end of the drive shaft (33). The drive shaft (33) includes an oil feed passage (35) extending upward from the oil feed pump (34) along the center of the drive shaft (33) as shown in FIG. 2(A). The oil feed passage (35) is configured to feed the oil to sliding surfaces of the bearings (23a, 24a) and the drive shaft (33) through a bearing oil feed path (36) extending in a radial direction of the drive shaft (33) at positions above and below the eccentric part (33b).

The oil feed passage (35) extends upward from the lower end of the drive shaft (33) to pass through the center of the drive shaft (33). The oil feed passage (35) includes a large-diameter oil supply passage (35a) which extends from the lower end of the drive shaft (33) to a position slightly above the eccentric part (33b), and a small-diameter degassing passage (35b) which extends from an upper end of the oil feed passage (35a) to a position slightly above the upper end of the front head (23). A degassing hole (35c) is formed in an upper end of the degassing passage (35b), and the degassing hole (35c) penetrates the drive shaft (33) in the radial direction thereof.

The compressor (1) includes an oil feed path (40) for feeding the oil from the oil sump (14) provided in the casing (10) to the discharge port (21b). In the first embodiment, the oil feed path (40) is configured as a direct oil feed path (40A) through which the oil sump (14) directly communicates with the discharge port (21b).

The oil feed path (40) is formed by using the oil feed passage (35) in the drive shaft (33). The oil feed path (40) includes a radially-opened oil feed hole (41a) which is opened substantially in the center of the eccentric part (33b) in the vertical direction, and extends in the radial direction of the eccentric part (33b), and an axially-extending slit (41b) formed in the outer peripheral surface of the eccentric part (33b) of the drive shaft (33) to extend in the axial direction. The eccentric part (33b) includes an annular groove (42) (a recess) is formed to communicate with the axially-extending slit (41b). The annular groove (42) is formed in each axial end of the eccentric part (33b). The annular grooves (42) are originally provided to feed the oil to sliding surfaces of the eccentric part (33b) and the swing piston (26).

The discharge port (21b) is a through hole which is formed in the compression mechanism (20) to partially overlap the annular groove (42) in a period from a point in time in a discharge process to when a compression process is started while the annular groove (42) (recess) revolves, and has a round cross-section. The discharge port (21b) is formed in such a manner that an inner end thereof overlaps the annular groove (42) of the eccentric part (33b) when the eccentric part (33b) approaches a top dead center (in the period from the point in time in the discharge process to when the compression process is started). Provided that a rotation angle of the piston at the top dead center as shown in FIG. 2(B) is 0°, a range of the rotation angle where the discharge port (21b) overlaps the annular groove (42) is from a rotation angle greater than 315° to about 45° in a clockwise direction. In particular, the range of the rotation angle is preferably from a rotation angle greater than 330° to about 20°.

The range of the rotation angle will be described with reference to a graph of FIG. 3.

The graph indicates a change in pressure in the compression chamber which increases or decreases in accordance with a change in rotation angle of the piston, and a displacement of the discharge valve (valve displacement). A unit of the pressure is MPa, and a unit of the valve displacement is mm. Compression of the refrigerant starts when the suction port (21a) is completely closed while the piston is rotated. Provided that the rotation angle of the piston at the top dead center as shown in FIG. 2(B) is 0°, the rotation angle of the piston at this time is about 45° in the clockwise direction. In FIG. 3, "Feed oil to port" designates the compressor of the present embodiment in which the oil is fed to the discharge port (21b), and "Conventional" designates a conventional compressor in which the oil is not fed to the discharge port.

As the piston is rotated, a pressure in the cylinder chamber (25) hardly changes until the rotation angle approaches about 90°. The pressure gradually increases for some time after the rotation angle exceeds 90°, and then abruptly increases as the rotation angle increases to about 225°. At the rotation angle about 225°, the discharge valve (28a) starts to open, and then immediately opens to the maximum lift by the increased pressure. When the discharge valve (28a) opens to the maximum lift, the pressure in the cylinder chamber (25) is once reduced, and the valve is kept open to a constant lift until the rotation angle approaches almost 270°. Then, the valve displacement gradually decreases, during which the pressure in the cylinder chamber (25) is kept almost constant for a certain period. Then, when the piston comes to an angle at which the discharge valve (28a) is almost closed (when the rotation angle exceeds 315° and approaches about 330°), the discharge process is substantially finished. When the discharge valve (28a) is closed, the pressure in the cylinder chamber (25) is abruptly reduced.

Thus, in the present embodiment, the lubricant oil contained in the bottom of the casing (10) is fed to the inside of the discharge port (21b) through the oil feed path (40) in the

period from the point in time in the discharge process to when the compression process is started (in the period when the rotation angle of the piston is 315°-45°). The "point in time in the discharge process" indicates a point in time when the pressure in the cylinder chamber (25) is reduced from a peak value. Since a pressure in the discharge port (21b) is high immediately after the discharge process is started, the oil is hardly fed to the discharge port even when a structure for feeding the oil to the discharge port is employed. When the discharge pressure is then reduced from the peak value, the oil enters the discharge port (21b). Since the oil is fed to the discharge port (21b) in the present embodiment, the pressure in the discharge port (21b) is once increased, and then reduced abruptly, unlike the conventional compressor in which the pressure is gently reduced when the discharge is finished, and then abruptly reduced.

Since the oil is fed to the discharge port (21b) in the period from the point in time in the discharge process to when the compression process is started as described above, the oil is present in the discharge port (21b) when the piston passes through the discharge port (21b) after the discharge port (21b) is closed by the discharge valve (28a). Specifically, the oil is present in the discharge port (21b) immediately after this event, i.e., when the refrigerant re-expands in the conventional compressor. In a range of the rotation angle where the refrigerant re-expands in the conventional compressor, the refrigerant does not flow into the cylinder chamber (25), and does not re-expand therein in the present embodiment. Instead, the oil flows from the discharge port (21b) to the cylinder chamber (25). Since the oil does not expand, the oil flowing to the cylinder chamber (25) does not cause the pulsation.

As described above, the oil feed path (40) is configured to feed the refrigeration machine oil to the inside of the discharge port (21b) in the period from the point in time in the discharge process to when the compression process is started. Provided that a cycle of the operation of the compression mechanism (20) is a 360° rotation of the piston, the refrigeration

machine oil is intermittently fed to the discharge port (21b) merely in a predetermined range of the rotation angle corresponding to the period from the point in time in the discharge process to when the compression process is started. This is because the annular groove (42) formed in the eccentric part (33b) of the drive shaft (33) intermittently communicates with the discharge port (21b) of the compression mechanism (20) only in the period from the point in time in the discharge process to when the compression process is started.

-Working Mechanism-

A working mechanism of the rotary compressor (1) will be described below.

When the electric motor (30) is operated, the rotor (32) is rotated, and the rotation is transferred to the drive shaft (33). When the drive shaft (33) is rotated, the swing piston (26) revolves in the cylinder (21) along the inner peripheral surface of the cylinder chamber (25). Thus, a volume of the cylinder chamber (25) is repeatedly increased and reduced. The refrigerant is sucked into the cylinder chamber (25) through the suction port (21a) when the volume of the cylinder chamber (25) is increased, and is compressed and discharged to the inside of the casing (10) through the discharge port (21b) when the volume of the cylinder chamber (25) is reduced.

The high pressure refrigerant discharged from the cylinder chamber (25) fills the casing (10). The high pressure refrigerant filling the casing (10) flows outside through the discharge pipe (17), and goes through a condensation stroke, an expansion stroke, and an evaporation stroke while circulating in the refrigerant circuit, and is sucked again into the compressor (1) to experience the compression stroke. Thus, the vapor compression refrigeration cycle is performed by the refrigerant circulating in the refrigerant circuit as described above.

When the compression mechanism (20) is operated, the refrigeration machine oil sucked up from the oil sump (14) by the oil feed pump (34) is fed to the bearings (23a, 24a),

thereby reducing increase in sliding resistance between the drive shaft (33) and the bearings (23a, 24a). Further, the refrigeration machine oil is also fed between the eccentric part (33b) and the swing piston (26), thereby reducing increase in sliding resistance therebetween. The oil sucked up by the oil feed pump (34) is fed to the discharge port (21b) through the radially-opened oil feed hole (41a) and the axially-extending slit (41b) of the oil feed path (40), and the annular groove (42) (the recess) of the eccentric part (33b) in the period from the point in time in the discharge process to when the compression process is started.

In general, a suction process, a compression process, and a discharge process constitute a single cycle of the operation of the compression mechanism (20). When the discharge process is finished, the swing piston (26) approaches the position near the top dead center as shown in FIG. 2(B). At this time, both ends of the discharge port (21b) are closed by the discharge valve (28a) and the swing piston (26). Thus, space inside the discharge port (21b) is hermetically sealed, in which the high pressure refrigerant remains, i.e., a dead volume from which the high pressure refrigerant cannot be completely discharged is provided. When the next compression process is started in this state, the high pressure refrigerant in the discharge port (21b) flows into the low pressure cylinder chamber (25) and re-expands therein, thereby causing pulsation.

In the present embodiment, the high pressure refrigeration machine oil is fed to the discharge port (21b) in the period from the point in time in the discharge process to when the compression process is started. This reduces the dead volume in the discharge port (21b). When the refrigeration machine oil is contained in the discharge port (21b), the refrigeration machine oil flows from the discharge port (21b) to the low pressure cylinder chamber (25) when the next compression process is started. At this time, the refrigeration machine oil does not substantially expand, unlike the refrigerant gas. Thus, the pulsation due to the re-expansion can be reduced.

-Advantages of First Embodiment-

According to the first embodiment described above, the high pressure refrigeration machine oil is fed to the inside of the discharge port (21b) in the period from the point in time in the discharge process to when the compression process is started. This can reduce the pulsation of the compression mechanism (20) due to the re-expansion of the high pressure refrigerant. Therefore, vibration and noise caused by the re-expansion can be reduced. The vibration and noise caused by the re-expansion of the high pressure gas remaining in the discharge port (21b) can be reduced by a simple configuration of feeding the oil to the discharge port (21b) by using the oil feed passage (35). The present embodiment can be achieved by merely shifting the discharge port (21b) radially inward, thereby reducing an increase in manufacturing cost as compared with the conventional configuration.

Since the refrigeration machine oil is intermittently fed to the discharge port (21b), an excessive amount of the oil is not contained in the discharge port (21b). An excessive amount of the refrigeration machine oil contained in the discharge port (21b) may affect the discharging of the refrigerant. In the present embodiment, however, the refrigerant is fed to the discharge port (21b) only intermittently, which does not have any adverse effect on the discharging of the refrigerant. Since the oil is fed to the inside of the discharge port (21b) in the period from the point in time in the discharge process to when the compression process is started, the amount of the oil is stabilized.

The oil flowing through the oil feed passage (35) is stirred in the oil feed passage (35) to foam, thereby reducing solubility of the refrigerant in the oil. Specifically, the operation can be performed with the oil and the refrigerant separated from each other, and efficiency is less reduced.

-Alternative of First Embodiment-

(First Alternative)

In a first alternative of the first embodiment shown in FIGS. 4(A) and 4(B), the configuration of the oil feed path (40) is different from the example shown in FIGS. 1 and 2.

In the oil feed path (40) according to the first alternative, a notch (43) through which the discharge port (21b) communicates with the annular groove (42) of the eccentric part (33b) in the period from the point in time in the discharge process to when the compression process is started is formed in an end face of the swing piston (26). In this configuration, the discharge port (21b) is formed in such a manner that an inner end of the discharge port (21b) does not directly overlap the annular groove (42) of the eccentric part (33b) when the swing piston (26) is in a region between positions forward and backward of the top dead center. The discharge port (21b) communicates with the annular groove (42) of the eccentric part (33b) through the notch (43) when the swing piston (26) is at the top dead center, and is in the region between the positions forward and backward of the top dead center (in the period from the point in time in the discharge process to when the compression process is started).

In the first alternative, the same advantages as the example shown in FIG. 2 can be provided, and the amount of the oil fed to the discharge port (21b) does not vary even when the discharge port (21b) is slightly misaligned. The swing piston (26) can integrally be molded by sintering. Thus, a mechanical process for forming the notch (43) is no longer necessary. This can reduce the number of steps of the mechanical process, and can reduce an increase in manufacturing cost.

(Second Alternative)

In a second alternative of the first embodiment shown in FIGS. 5(A) and 5(B), the configuration of the oil feed path (40) is different from the examples shown in FIGS. 1-4.

In the oil feed path (40) according to the second alternative, a notch (44) through which the discharge port (21b) communicates with the annular groove (42) of the eccentric

part (33b) in the period from the point in time in the discharge process to when the compression process is started is formed in the discharge port (21b). In this configuration, the discharge port (21b) is formed in such a manner that an inner end of the discharge port (21b) does not directly overlap the annular groove (42) of the eccentric part (33b) when the swing piston (26) is in the region between the positions forward and backward of the top dead center. The discharge port (21b) communicates with the annular groove (42) of the eccentric part (33b) through the notch (44) when the swing piston (26) is at the top dead center, and is in the region between the positions forward and backward of the top dead center (in the period from the point in time in the discharge process to when the compression process is started).

In this configuration, the same advantages as the example shown in FIG. 2 can be provided, and the amount of the oil fed to the discharge port (21b) does not vary even when the discharge port (21b) is slightly misaligned. When the front head (23) is formed by sintering, a mechanical process for forming the notch (44) is no longer necessary, thereby reducing an increase in manufacturing cost.

(Third Alternative)

In the above embodiment, the oil is fed to the inside of the discharge port (21b) in the period from the point in time in the discharge process to when the compression process is started. However, the oil may be fed to the inside of the discharge port (21b) in a shorter period, i.e., in a period from the point in time in the discharge process to when the discharge process is finished. In this case, the oil is present in the discharge port (21b) when the discharge process is finished. This can reduce the occurrence of the pulsation caused by the re-expansion of the refrigerant gas when the next compression process is started.

(Fourth Alternative)

In the above embodiment, the oil is fed to the inside of the discharge port (21b) in the period from the point in time in the discharge process to when the compression process is

started. However, the oil may be fed to the inside of the discharge port (21b) in a shorter period, i.e., in a period from when the discharge process is finished to when the compression process is started. In this case, the oil is present in the discharge port (21b) before the compression process is started. This can reduce the occurrence of the pulsation caused by the re-expansion of the refrigerant gas when the next compression process is started.

[Second Embodiment of the Invention]

A second embodiment of the present invention will be described below.

In the second embodiment, the configuration of the oil feed path (40) shown in FIGS. 6(A) and 6(B) is different from the examples shown in FIGS. 1-5.

In the compressors (1) according to the first embodiment and the alternatives shown in FIGS. 1-5, the oil feed path (40) is configured to directly feed the refrigeration machine oil from the oil sump (14) in the casing (10) to the discharge port (21b). In this embodiment, the oil feed path (40) is configured in such a manner that the refrigeration machine oil is temporarily contained in the cylinder chamber (25), and then fed to the discharge port (21b). Specifically, in the second embodiment, the oil feed path (40) is configured as an indirect oil feed path (40B) which indirectly feeds the refrigeration machine oil in the oil sump (14) to the discharge port (21b) through the cylinder chamber (25).

The oil feed path (40) according to the second embodiment includes a communicating groove (45) formed to open in the cylinder chamber (25). The communicating groove (45) is formed in an inner surface of the rear head (24) facing the cylinder chamber (25). The communicating groove (45) is formed with a radially-extending groove extending in a radial direction of the cylinder chamber (25). A length of the communicating groove (45) is slightly greater than a thickness of the oscillating piston body (26a) in such a manner that a passage is formed from sliding surfaces of the eccentric part (33b) of the drive shaft (33) and the swing piston (26) to the cylinder chamber (25) when a

rotation angle of the swing piston (26) is in a range corresponding to a period from when the compression process is started to when the discharge process is finished (in a predetermined range of the rotation angle corresponding to the period between the compression process and the discharge process).

When the compression mechanism (20) of the second embodiment is operated, a refrigerant is sucked into the cylinder chamber (25) through the suction port (21a), and is compressed as the swing piston (26) revolves along the inner peripheral surface of the cylinder chamber (25). The refrigerant compressed to become a high pressure refrigerant is discharged to the space inside the casing (10) through the discharge port (21b). Then, the suction process, the compression process, and the discharge process described above are repeated.

While the compression mechanism (20) is operated, the refrigeration machine oil is introduced from the oil sump (14) in the casing (10) to the sliding surfaces of the eccentric part (33b) and the swing piston (26). The refrigeration machine oil flows from the sliding surfaces to the cylinder chamber (25) through the communicating groove (45) in the range of the rotation angle corresponding to the period from when the compression process is started to when the discharge process is finished. As a volume of a discharge side of the cylinder chamber (25) is reduced, the refrigeration machine oil flows into the discharge port (21b) in a period from the point in time in the discharge process to when the compression process is started (in the range of the rotation angle where the oil is fed to the inside of the discharge port (21b)). Then, the refrigeration machine oil in the discharge port (21b) flows into the cylinder chamber (25) when the next compression process is started. Thus, the re-expansion of the high pressure refrigerant hardly occurs, and the pulsation caused by the re-expansion is reduced. This can reduce vibration and noise of the compressor.

As compared with the first embodiment shown in FIG. 2, design freedom in

determining the range of the rotation angle where the oil is fed can be increased. Thus, the oil can easily be fed at an optimum point in time.

Further, unlike the structure of Patent Document 1, the oil feed passage is not always open in the cylinder chamber (25). This can prevent excessive feeding of the oil to the cylinder chamber (25) to prevent the re-expansion.

-Alternative of Second Embodiment-

In an alternative of the second embodiment, the configuration of the oil feed path (40) is different from the example shown in FIG. 6.

As shown in FIGS. 7(A), 7(B), and 7(C), the oil feed path (40) of the compression mechanism (20) includes an oil containing recess (46) formed to open in the cylinder chamber (25). The oil containing recess (46) is formed in a surface of the rear head (24) facing the cylinder chamber (25). Thus, the oil containing recess (46) is formed in the cylinder (21) of the compression mechanism (20) to be located away the discharge port (21b). The oil containing recess (46) is formed with a round recess.

When the compression mechanism (20) is operated, the refrigeration machine oil is introduced from the oil sump (14) in the casing (10) to sliding surfaces of the eccentric part (33b) and the swing piston (26). The refrigeration machine oil is temporarily contained in the oil containing recess (46). When the swing piston (26) revolves along the inner peripheral surface of the cylinder chamber (25) with the refrigeration machine oil contained in the oil containing recess (46), the refrigeration machine oil in the oil containing recess (46) is pushed out of the oil containing recess (46) to the discharge port (21b), and flows into the discharge port (21b) as the compression process is switched to the discharge process, and the volume of the cylinder chamber (25) is reduced. Thus, the refrigeration machine oil is present in the discharge port (21b) in the period from the point in time in the discharge process to when the compression process is started. When the next compression process is

started, the re-expansion of the high pressure refrigerant hardly occurs, and the pulsation due to the re-expansion is reduced. This can reduce vibration and noise of the compressor.

As compared with the first embodiment shown in FIG. 2, design freedom in determining the range of the rotation angle at which the oil is fed can be increased. Thus, the oil can easily be fed at an optimum point in time.

Further, unlike the structure of Patent Document 1, the oil feed passage is not always open in the cylinder chamber (25). This can prevent excessive feeding of the oil to the cylinder chamber (25) to prevent the re-expansion.

In this alternative, the amount of the oil fed per rotation can be kept constant. Thus, even when the number of rotations is changed, the dead volume of the discharge port (21b) can be reduced by feeding an appropriate amount of the oil.

Referring to FIGS. 8(A)-8(H), a preferable position of the oil containing recess (46) will be described below.

FIGS. 8(A)-8(H) are cross-sectional views of the compression mechanism (20) illustrating that the piston revolves in the order of (A), (B), (C), (D), (E), (F), (G), (H), and (A), i.e., illustrating the swing piston (26) sequentially rotated by an angle of 45°. The swing piston (26) at the top dead center as shown in FIG. 8(A) is regarded as a reference for convenience sake, and a rotation angle thereof is regarded as 0° (360°).

The oil containing recess (46) is formed in an axial end face of the cylinder chamber (25) to be opened/closed by the swing piston (26). Specifically, the oil containing recess (46) is positioned in such a manner that the oil containing recess (46) is exposed from the end face of the swing piston (26) when the suction port (21a) is completely closed as shown in FIG. 8(B), is covered with the end face of the swing piston (26) immediately before the discharge process is started as shown in FIG. 8(E), and communicates with the sliding surfaces of the crank shaft (33) and the swing piston (26) in the discharge process as shown in

FIG. 8(G).

With the position of the oil containing recess (46) determined in this way, the oil containing recess (46) is covered with the end face of the piston (26) immediately before the discharge process is started as shown in FIG. 8(E), and the oil containing recess (46) communicates with the sliding surfaces of the crank shaft (33) and the piston (26) in the discharge process as shown in FIG. 8(G). The oil is contained in the oil containing recess (46), and is discharged to the cylinder chamber (25) when the suction port (21a) is completely closed. The oil is kept contained in the discharge port (21b) in the compression process and the next discharge process until the next compression process is started. Thus, when the next compression process of the compression mechanism (20) is started, the oil present in the discharge port (21b) at this time is introduced to the low pressure cylinder chamber (25).

Thus, the oil which is discharged to the cylinder chamber (25) when the suction port (21a) is completely closed is kept contained in the discharge port (21b) until the next compression process is started. Then, when the compression process is started, the oil present in the discharge port (21b) when the discharge process is finished is introduced to the low pressure cylinder chamber (25). This can reduce the pulsation due to the re-expansion of the high pressure gas.

Specifically, the oil containing recess (46) is positioned to meet the following conditions:

Diameter of the recess < (Outer diameter of the piston − Inner diameter of the piston)/2

Position in a radial direction = (Outer diameter of the piston + Inner diameter of the piston)/4

Range of rotation angle =190°-310°

[Third Embodiment of the Invention]

A third embodiment of the present invention will be described below.

In the third embodiment, the configuration of the oil feed path (40) shown in FIGS. 9(A) and 9(B) is different from the examples shown in FIGS. 1-8.

In the third embodiment, an oil introducing hole (47) through which the oil sump (14) in the casing (10) communicates with the cylinder chamber (25) of the compression mechanism (20) is formed in the cylinder (21).

In this configuration, when the compression mechanism (20) is operated, the oil contained in the oil sump (14) flows into the cylinder chamber (25) through the oil introducing hole (47), and is introduced to the discharge port (21b) in the period from the point in time in the discharge process to when the compression process is started. The oil is introduced from the oil introducing hole (47) to the cylinder chamber (25) when the oil introducing hole (47) is intermittently opened while the swing piston (26) is operated. Since the oil is present in the discharge port (21b) when the compression process is started, the dead volume of the discharge port (21b) is reduced as compared with the case where the oil is not introduced to the discharge port (21b). Thus, like the above embodiments, the occurrence of vibration and noise due to the re-expansion of the high pressure refrigerant can be reduced.

As compared with the first embodiment, design freedom in determining the range of the rotation angle at which the oil is fed can be increased. Thus, the oil can easily be fed at an optimum point in time.

Further, the oil introducing hole (47) which intermittently communicates with the cylinder chamber (25) can prevent excessive feeding of the oil to the discharge port (21b).

[Fourth Embodiment of the Invention]

A fourth embodiment of the present invention will be described.

In the fourth embodiment, the configuration of the oil feed path (40) shown in FIGS. 10(A) and 10(B) is different from the examples shown in FIGS. 1-9.

In the fourth embodiment, the compression mechanism (20) is formed with a swing compressor (1) including a piston and a blade (26b) integrated with each other. A slit (48) through which a back pressure chamber on a back surface of the blade (26b) communicates with the cylinder chamber (25) is formed in a side surface of the blade (26b) closer to the discharge port (21b).

The slit (48) is formed in a lower end face of the blade (26b). In this embodiment, oil level (15) of the oil in the oil sump (14) is determined in such a manner that the slit (48) is kept immersed in the oil. The slit (48) communicates with the cylinder chamber (25) when the swing piston (26) approaches a bottom dead center as shown in FIG. 10(B). Specifically, the slit (48) intermittently communicates with the cylinder chamber (25) while the swing piston (26) is operated.

In the fourth embodiment, while the compression mechanism (20) is operated, the oil in the oil sump (14) passes through the slit (48) to enter the cylinder chamber (25), and is introduced to the discharge port (21b) in the period from the point in time in the discharge process to when the compression process is started. Since the oil is present in the discharge port (21b) when the compression process is started, the dead volume of the discharge port (21b) can be reduced as compared with the case where the oil is not introduced to the discharge port (21b). Thus, like the above embodiments, the occurrence of vibration and noise due to the re-expansion can be reduced.

In this embodiment, the oil near the discharge port (21b) flows into the cylinder chamber (25). Thus, the oil can reliably be introduced to the discharge port (21b).

Further, the slit (48) which intermittently communicates with the cylinder chamber (25) can prevent excessive feeding of the oil to the discharge port (21b).

In this embodiment, the slit (48) is formed along the lower end of the blade (26b). However, the slit (48) may be formed to extend parallel with the end face of the blade (26) to

divide the blade (26b) into two halves in a direction of a height. In this case, the amount of the oil in the oil sump (14) is determined to bring the oil level higher than that in the above embodiments. As compared with the slit (48) formed in the vertical center of the blade (26b), the slit (48) formed along the lower end of the blade (26b) can more reliably reduce the occurrence of vibration and noise due to the re-expansion because the oil can be introduced to the discharge port (21b) even when the oil level (15) of the oil in the oil sump (14) is lowered.

[Fifth Embodiment of the Invention]

A fifth embodiment of the present invention will be described below.

According to the fifth embodiment, as shown in FIGS. 11(A) and 11(B), an oil stirring mechanism (50) for stirring the oil contained in the oil sump (14) in accordance with the rotation of the compression mechanism (20) is provided at a lower end of the crank shaft (33).

As the oil stirring mechanism, an oil stirrer (50) having a stirring impeller (52) at a lower end thereof is attached to a lower end of the crank shaft (33). The stirrer (50) is formed by processing a metal plate of about 1.6 mm in thickness. The stirrer (50) attached to the crank shaft (33) is rotated in accordance with the rotation of the compression mechanism (20).

The stirrer (50) of the present embodiment may be applied to any one of the first to fourth embodiments and their alternatives.

In this embodiment, the oil contained in the oil sump (14) is stirred with the stirring impeller (52), and the refrigerant dissolved in the refrigeration machine oil is foamed, and is separated from the oil. Thus, the oil in which almost no refrigerant is dissolved is fed to the discharge port (21b) of the compression mechanism (20). This can reduce the refrigerant flowing from the discharge port (21b) to the cylinder chamber (25) when the compression process is started, thereby effectively reducing the occurrence of the pulsation.

A centrifugal force is acted on the refrigeration machine oil flowing upward through the oil feed passage (35a). Thus, the refrigeration machine oil is fed to the compression mechanism (20) through the radially-opened oil feed hole (41a) and the axially-extending slit (41b) by the centrifugal force. The refrigerant separated from the oil also flows upward through the oil feed passage (35a). However, the gaseous refrigerant does not receive the centrifugal force because it is light, and is concentrated to the center of the passage. The bubbles of the refrigerant flowing upward through the center of the oil feed passage (35a) flows upward through the degassing passage (35b), and then flows into the casing (10) through the degassing hole (35c).

[Other Embodiments]

The above-described embodiments may be modified in the following manner.

For example, the first to third embodiments describe examples where the present invention is applied to the compressor (1) including the swing piston type compression mechanism (20). However, the oil feed path (40) of the first embodiment may be applied to a compressor (1) including a rolling piston type compression mechanism (20) in which a cylindrical piston and a flat blade (26b) are separate members, and a radially inner end of the blade (26b) is press-fitted to an outer peripheral surface of the piston.

The communicating groove (45) shown in FIG. 6, and the oil containing recess (46) shown in FIG. 7 may be provided in the front head.

In the above-described embodiments, the reed valve is used as the discharge valve (28a). However, the discharge valve (28a) of the present invention is not limited to the reed valve, and a poppet valve may be used in place of the reed valve.

In the second to fifth embodiments, the refrigeration machine oil is fed to the discharge port (21b) in the period from the point in time in the discharge process to when the compression process is started, and the oil flows from the discharge port (21b) to the cylinder

chamber (25) when the next compression process is started. However, the oil may be fed to the discharge port (21b) in a period from the point in time in the discharge process to when the discharge process is finished, or in a period from when the discharge process is finished to when the compression process is started. In either case, the oil is fed before the compression process is started. Thus, the occurrence of the pulsation due to the re-expansion of the gaseous refrigerant can be reduced.

The above-described embodiments have been set forth merely for the purposes of preferred examples in nature, and are not intended to limit the scope, applications, and use of the invention.

INDUSTRIAL APPLICABILITY

As described above, the present invention is useful for technologies of reducing the vibration and noise which are caused when the high pressure gas which remains in the discharge port (21b) of the compression mechanism (20) of the rotary compressor (1) returns to the cylinder chamber (25) and re-expands therein.

DESCRIPTION OF REFERENCE CHARACTERS

1	Swing compressor (rotary compressor)
10	Casing
14	Oil sump
20	Compression mechanism
21	Cylinder
21b	Discharge port
25	Cylinder chamber
26	Piston
33	Crank shaft
33b	Eccentric part

40	Oil feed path
40A	Direct Oil feed path
40B	Indirect oil feed path
42	Recess
43	Notch
44	Notch
45	Communicating groove
46	Oil containing recess
47	Through hole
48	Slit

2010261248 24 Jan 2014

CLAIMS:

1. A high pressure dome type rotary compressor comprising:

a casing;

a crank shaft extending in a vertical direction, the crank shaft having an eccentric part, and the casing having a bottom at a lower end of the crank shaft; and

a compression mechanism disposed in the casing, the compression mechanism including a rotary compression mechanism having a piston arranged to revolve in a cylinder along an inner peripheral surface of the cylinder chamber when the crank shaft having the eccentric part is rotated to compress gas in a cylinder chamber defined by the piston and cylinder, the compression mechanism having a discharge port and a discharge valve, the discharge valve being opened in a discharge process and closed during a period from when the discharge process is finished to when a next compression process is started, and a single cycle of operation of the compression mechanism is a 360° rotation of the crank shaft,

the compressor being arranged and configured such that high pressure gas discharged from the discharge port in the discharge process is discharged outside the casing through space in the casing, and

the crank shaft and the discharge port being shaped and located to define an oil feed path that feeds lubricant oil contained in the bottom of the casing to an inside of the discharge port, the oil feed path being

open to the inside of the discharge port as the crankshaft rotates through a first rotation angle range of the 360° rotation of the crank shaft, and

closed to the inside of the discharge port as the crankshaft rotates through a second rotation angle range of the 360° rotation of the crank shaft, the second rotation angle range being different from the first rotation range.

2. The rotary compressor of claim 1, wherein the oil feed path is configured to feed the oil to the inside of the discharge port in a period from the point in time in the discharge process to when the discharge process is finished.

3. The rotary compressor of claim 1, wherein the oil feed path is configured to feed the oil to the inside of the discharge port in a period from when the discharge process is finished to when the compression process is started.

2010261248 24 Jan 2014

4. The rotary compressor of claim 1, wherein

a top dead center position of the piston forms a rotation angle reference point of 0°,

a position at which the discharge process of the compression mechanism is finished is at a rotation angle approaching about 330° relative to the rotation angle reference point,

a position at which the compression process of the compression mechanism is started is at a rotation angle of about 45° relative to the rotation angle reference point, and

the oil feed path being configured to feed the oil to the inside of the discharge port when as the first rotation angle range is in a range between 315° and 45° relative to the rotation angle reference point.

5. The rotary compressor of claim 1, wherein the oil feed path directly communicates an oil sump provided in the bottom of the casing and the discharge port to feed the oil from the oil sump to the discharge port.

6. The rotary compressor of claim 5, further comprising:

an oil stirring mechanism arranged to stir the oil contained in the oil sump in accordance with rotation of the compression mechanism, the oil stirring mechanism including a stirring impeller attached to the lower end of the crank shaft to rotate therewith.

7. The rotary compressor of claim 1, wherein

the eccentric part defines a recess formed therein, the recess defining part of the oil feed path, and the oil is introduced in the recess, and

the recess is configured to communicate with the discharge port of the compression mechanism as the crankshaft rotates through the first rotation angle range.

8. The rotary compressor of claim 7, wherein the discharge port includes a through hole which is defined by a part of the compression mechanism, and the through hole is arranged to partially overlap the recess as the crankshaft rotates through the first rotation angle range.

9. The rotary compressor of claim 7, wherein

the discharge port includes a through hole defined by a part of the compression mechanism, and the through hole is located radially outward from an orbit in which the recess revolves, and

the oil feed path includes a notch defined by an end face of the piston, the notch defining part of the oil feed path, and the recess communicates with the inside of the discharge port through the notch as the crankshaft rotates through the first rotation angle range.

2010261248 24 Jan 2014

10. The rotary compressor of claim 7, wherein

the discharge port includes a through hole defined by a part of the compression mechanism, and the through hole is located radially outward from an orbit in which the recess revolves, and

the part of the compression mechanism further defines a notch extending from the through hole, the notch defining part of the oil feed path, and the recess communicates with the inside of the discharge port through the notch as the crankshaft rotates through the first rotation angle range.

11. The rotary compressor of claim 1, wherein the oil feed path indirectly communicates an oil sump provided in the casing to the discharge port through an inside of the compression mechanism.

12. The rotary compressor of claim 11, further comprising:

an oil stirring mechanism arranged to stir the oil contained in the oil sump in accordance with rotation of the compression mechanism, the oil stirring mechanism including a stirring impeller attached to the lower end of the crank shaft to rotate therewith.

13. The rotary compressor of claim 11, wherein the compression mechanism includes a communicating groove defined by a part of the compression mechanism, the communicating groove has an end opened in a sliding surface of the compression mechanism and an other end opened in the cylinder chamber as the crankshaft rotates through the first rotation angle range to introduce the oil fed to the sliding surface of the compression mechanism to the cylinder chamber.

14. The rotary compressor of claim 11, wherein the compression mechanism includes an oil containing recess defined by an inner wall surface of the cylinder chamber to temporarily contain the oil fed from the oil sump to the cylinder chamber.

15. The rotary compressor of claim 14, wherein the oil containing recess is defined by an axial end face of the cylinder chamber, the oil containing recess being opened/closed by the piston such that the oil containing recess

is exposed from an end face of the piston in the period from when the discharge process is finished to when the compression process is started,

is covered with the end face of the piston before the discharge process is started, and

2010261248 24 Jan 2014

communicates with sliding surfaces of the crank shaft and the piston in the discharge process.

16. The rotary compressor of claim 11, wherein an oil introducing hole is defined by the cylinder, and the oil sump in the casing communicates with the cylinder chamber of the compression mechanism through the oil introducing hole.

17. The rotary compressor of claim 11, wherein

the rotary compression mechanism includes a blade integrated with the piston to form a swing piston, and a suction port of the rotary compression mechanism and the discharge port are arranged to sandwich the blade therebetween, and

a slit is defined by a side surface of the blade on a discharge port side, a back pressure chamber is defined on a back surface of the blade, and the back pressure chamber communicates with the cylinder chamber through the slit.

18. A high pressure dome type rotary compressor substantially as hereinbefore described with reference to any one of the embodiments as that embodiment is shown in one or more of the accompanying drawings.

Daikin Industries Ltd

Patent Attorneys for the Applicant/Nominated Person

SPRUSON & FERGUSON

FIG.1

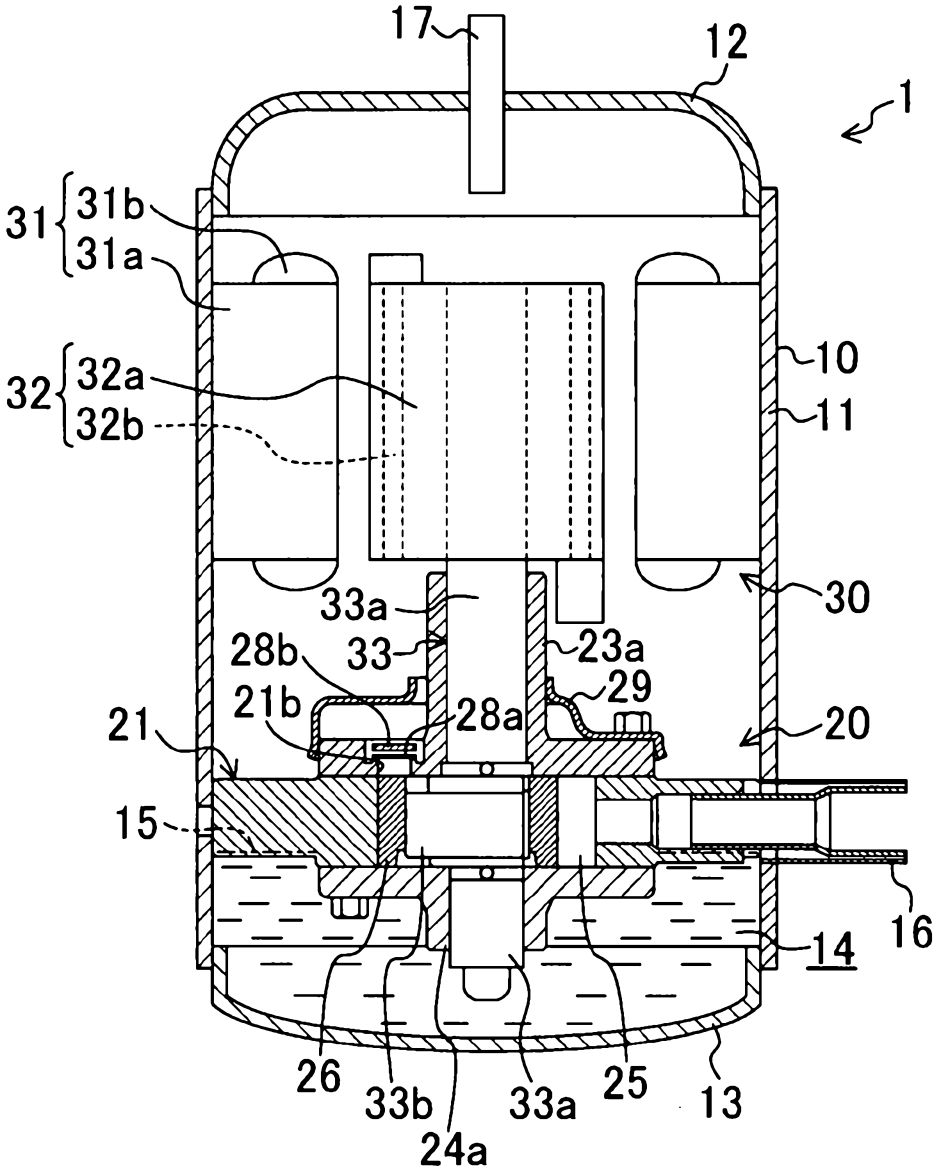
17
12
1
31
31b
31a
32
32a
32b
10
11
30
33a
28b
33
23a
29
21b
28a
20
21
15
16
14
26
33b
24a
33a
25
13

FIG.2

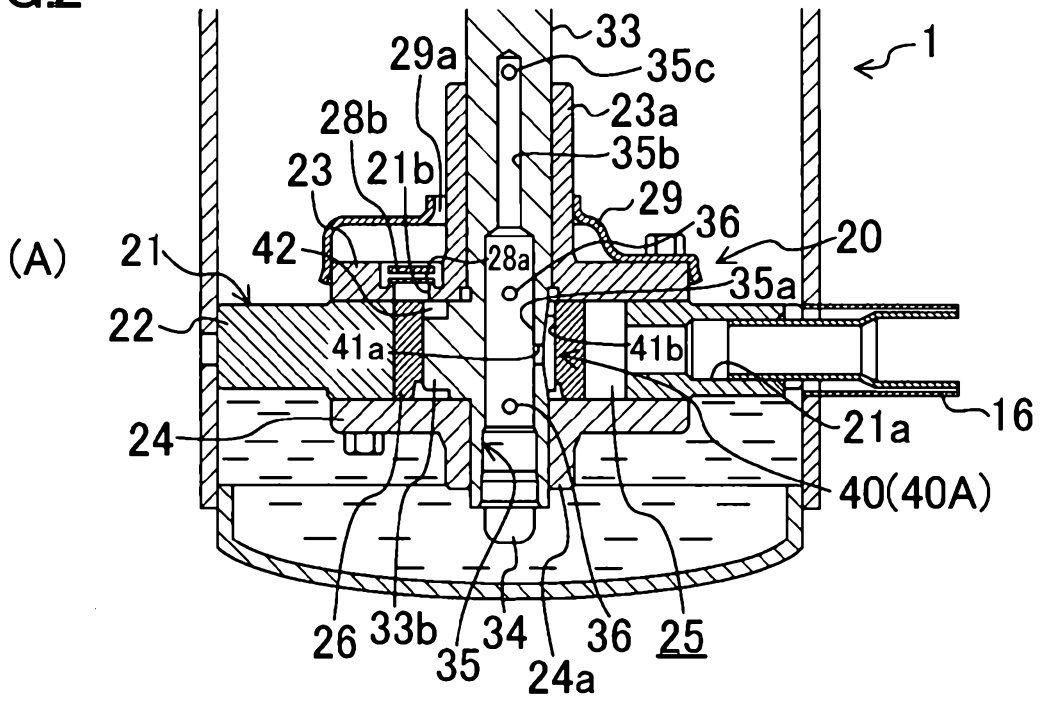
(A)
1
33
29a
35c
23a
28b
35b
23
21b
29
36
20
21
42
28a
35a
22
41a
41b
21a
16
24
40(40A)
26
33b
34
36
25
35
24a

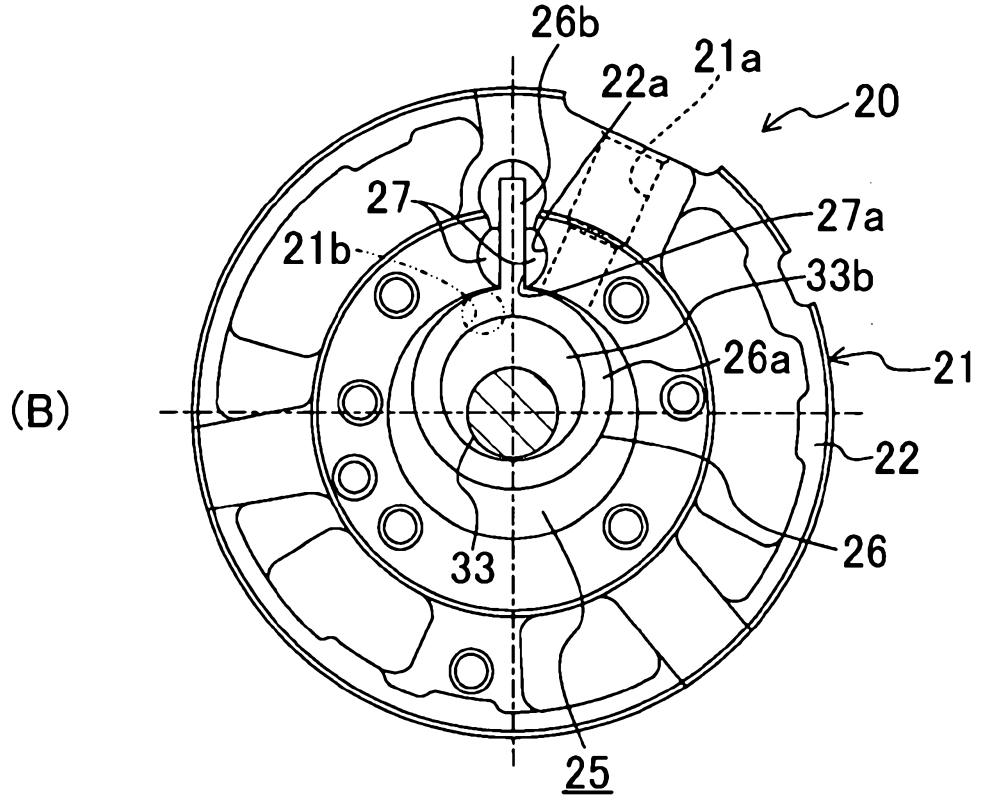
(B)
26b
21a
22a
20
27
27a
21b
33b
26a
21
22
26
33
25

FIG.3

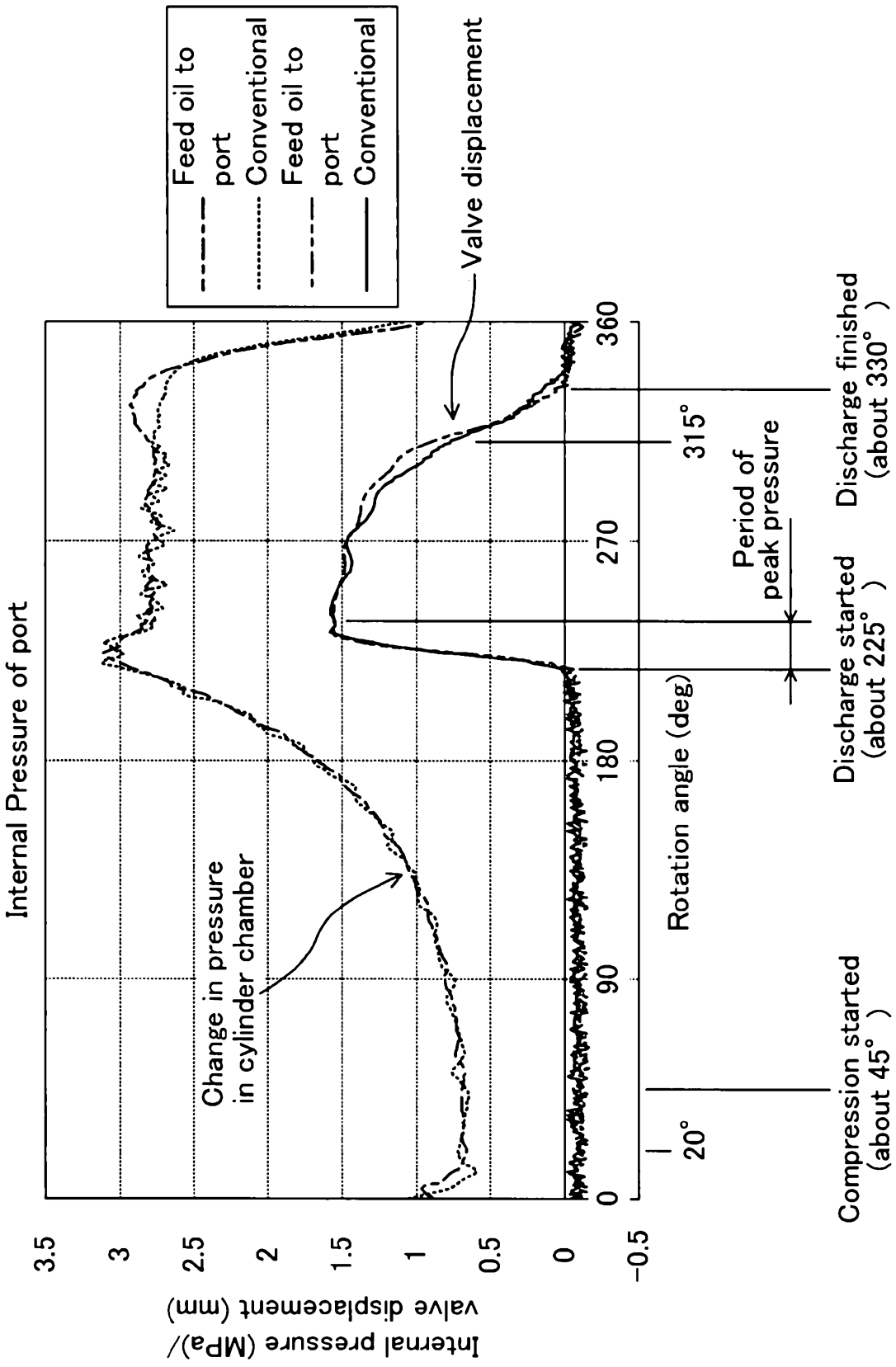
Internal pressure (MPa)/
valve displacement (mm)
3.5
3
2.5
2
1.5
1
0.5
0
−0.5
0
90
180
270
360
Rotation angle (deg)
Internal Pressure of port
Change in pressure
in cylinder chamber
Valve displacement
Feed oil to port
Conventional
Feed oil to port
Conventional
20°
315°
Period of
peak pressure
Compression started
(about 45°)
Discharge started
(about 225°)
Discharge finished
(about 330°)

FIG.4

(A)

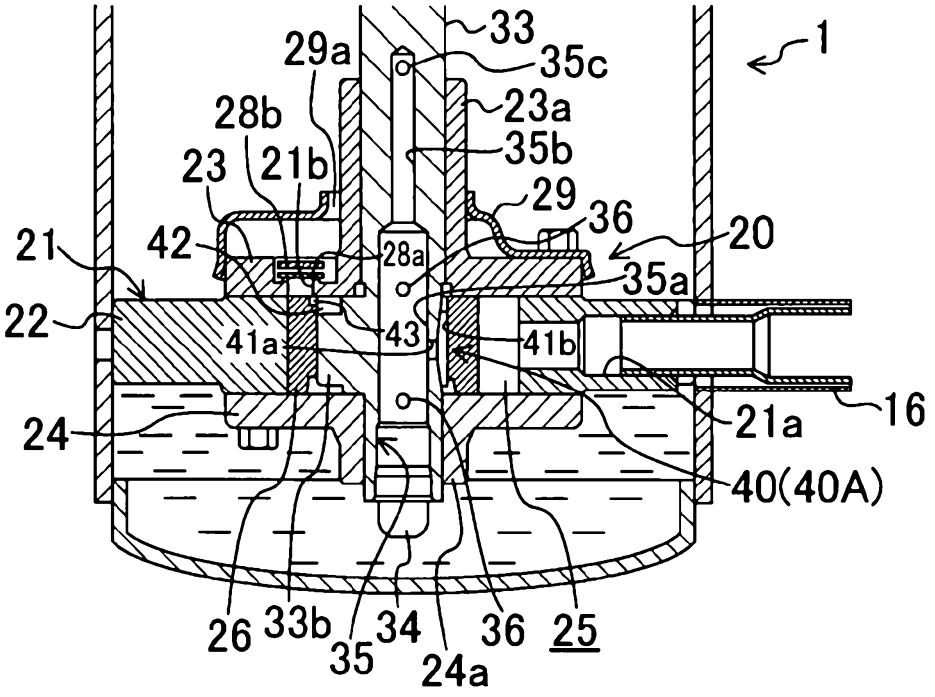
33
29a
35c
1
28b
23a
23
21b
35b
29
36
20
21
42
28a
35a
22
41a
43
41b
16
21a
24
40(40A)
26
33b
35
34
36
25
24a

(B)

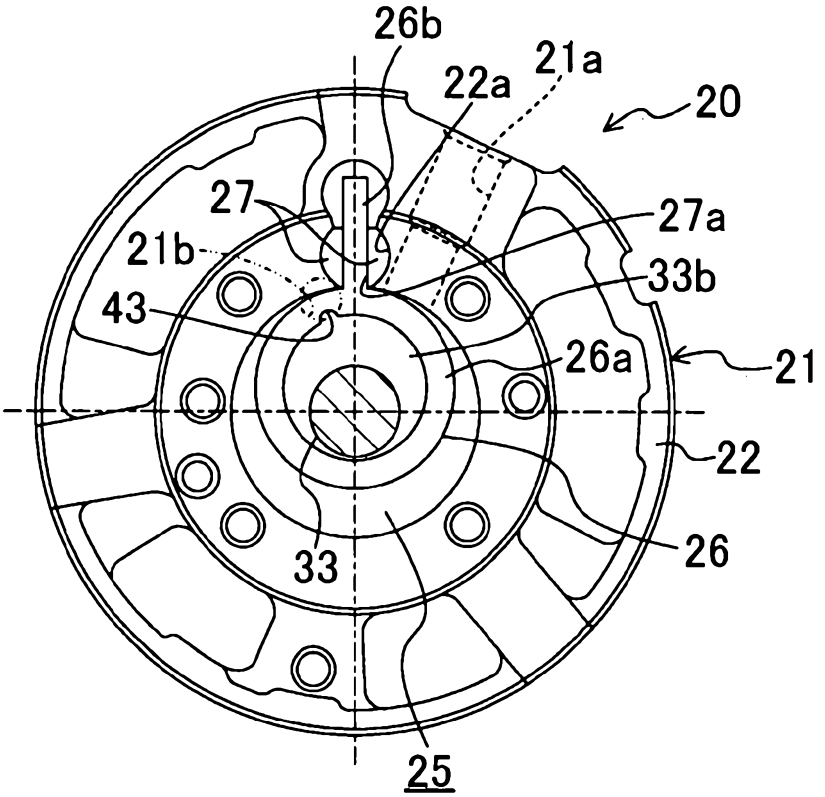
26b
21a
22a
20
27
27a
21b
33b
43
26a
21
22
26
33
25

FIG.5

(A)

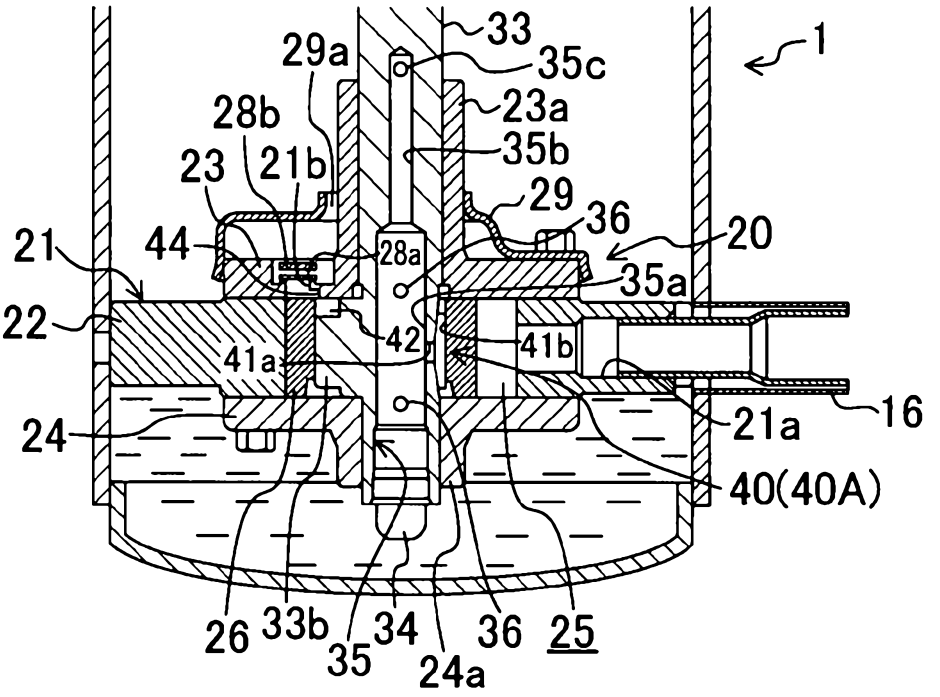
33
29a
35c
1
28b
23a
23
21b
35b
29
36
20
21
44
28a
35a
22
42
41b
41a
16
21a
24
40(40A)
26
33b
35
34
36
25
24a

(B)

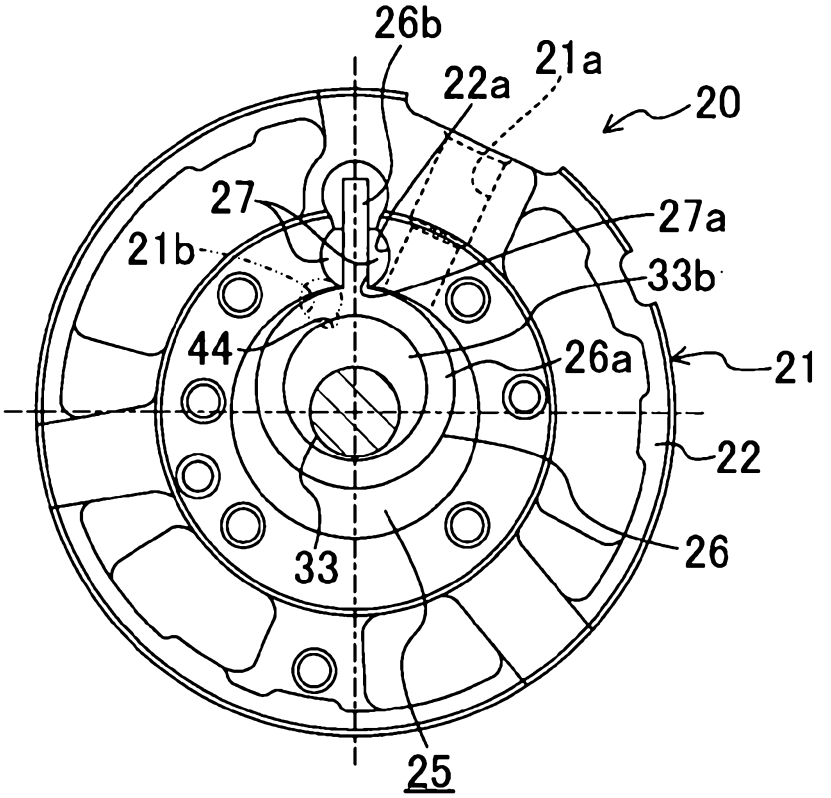
26b
21a
22a
20
27
27a
21b
33b
44
26a
21
22
26
33
25

FIG.6

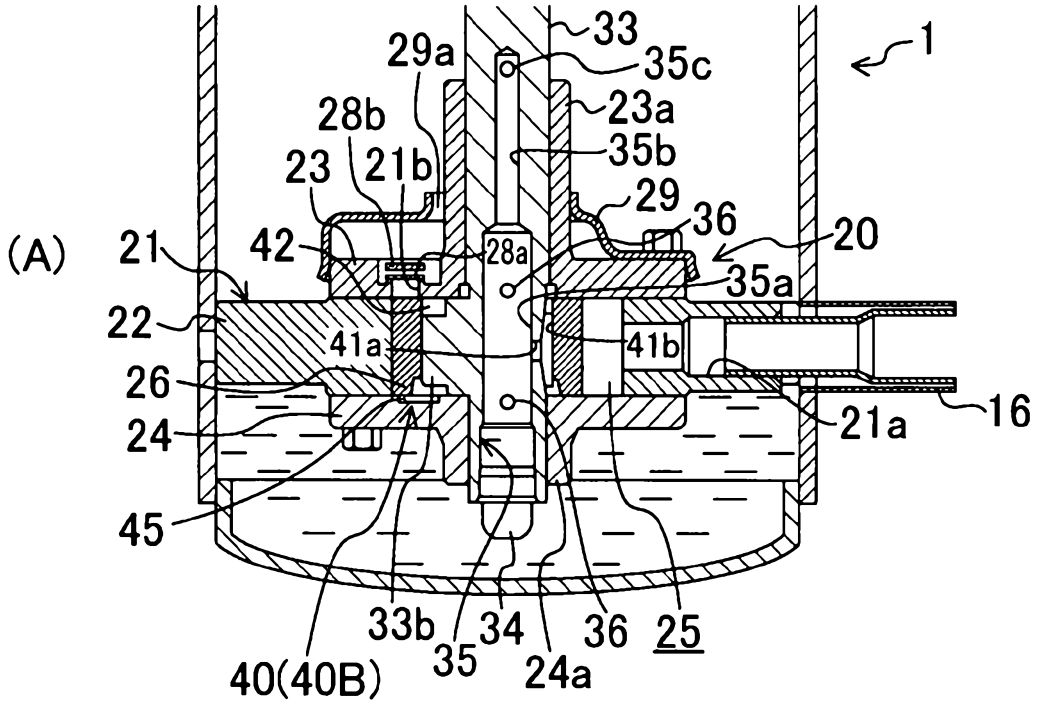
(A)
1
33
29a
35c
23a
28b
35b
23
21b
29
36
20
21
42
28a
35a
22
41a
41b
26
16
21a
24
45
33b
34
36
25
35
24a
40(40B)

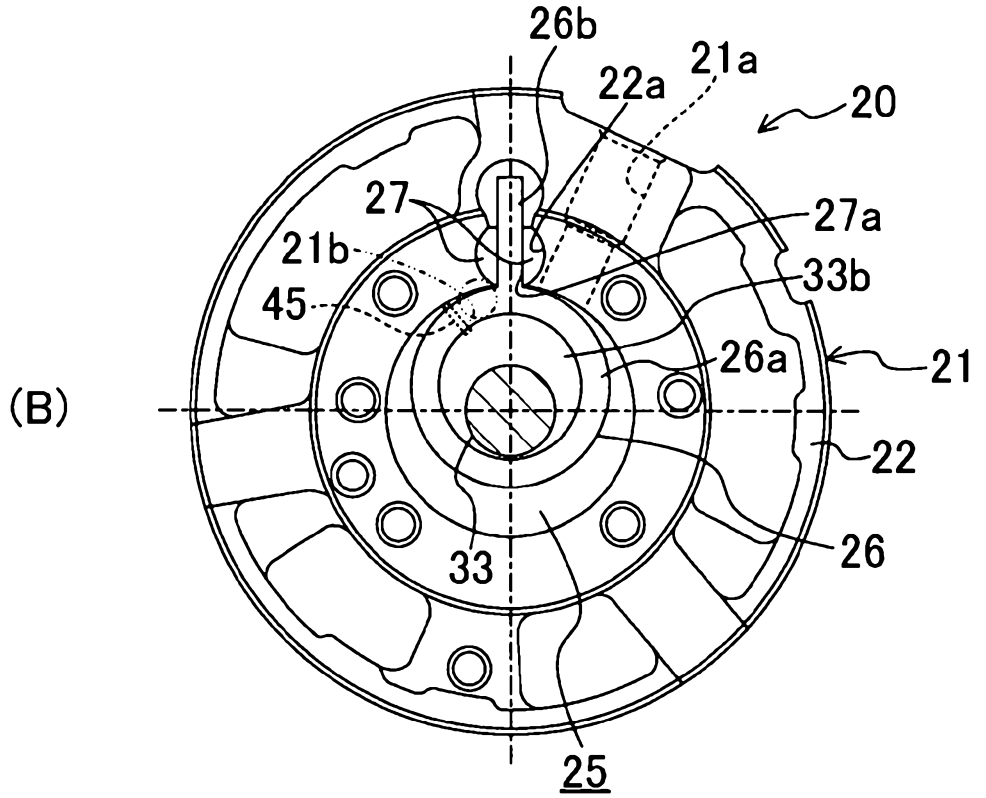
(B)
26b
21a
22a
20
27
27a
21b
33b
45
26a
21
22
26
33
25

FIG.7

(A)

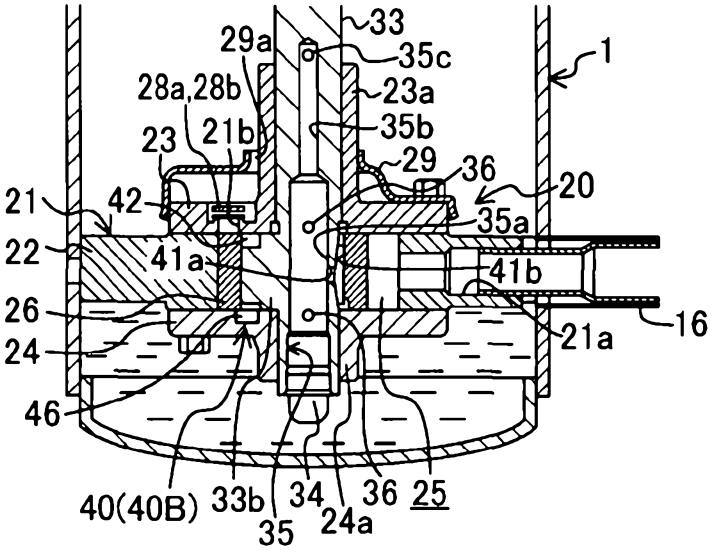
33
29a
35c
1
28a,28b
23a
23
21b
35b
29
36
20
21
42
35a
22
41a
41b
26
16
24
21a
46
40(40B)
33b
34
36
25
35
24a

(B)

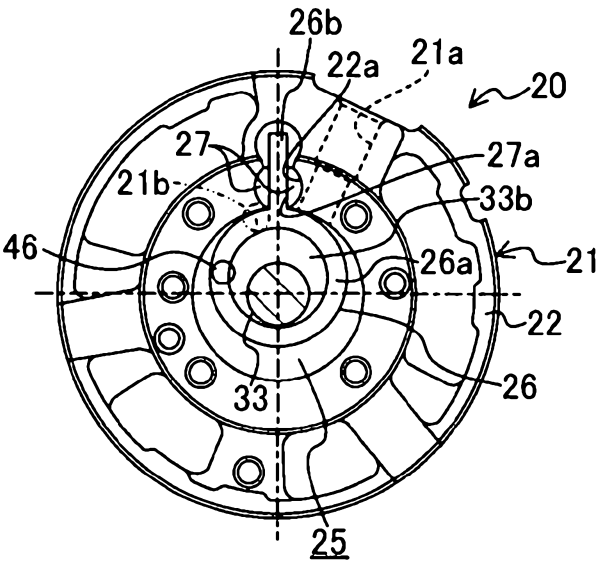
26b
22a
21a
20
27
27a
21b
33b
46
26a
21
22
26
33
25

(C)

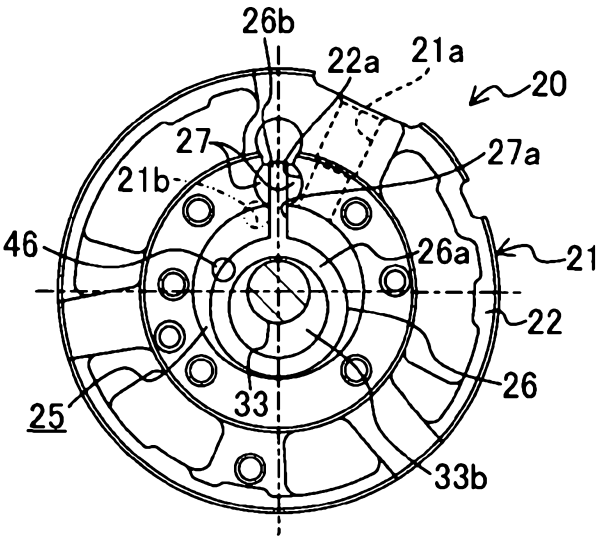
26b
22a
21a
20
27
27a
21b
46
26a
21
22
26
33
25
33b

FIG.8

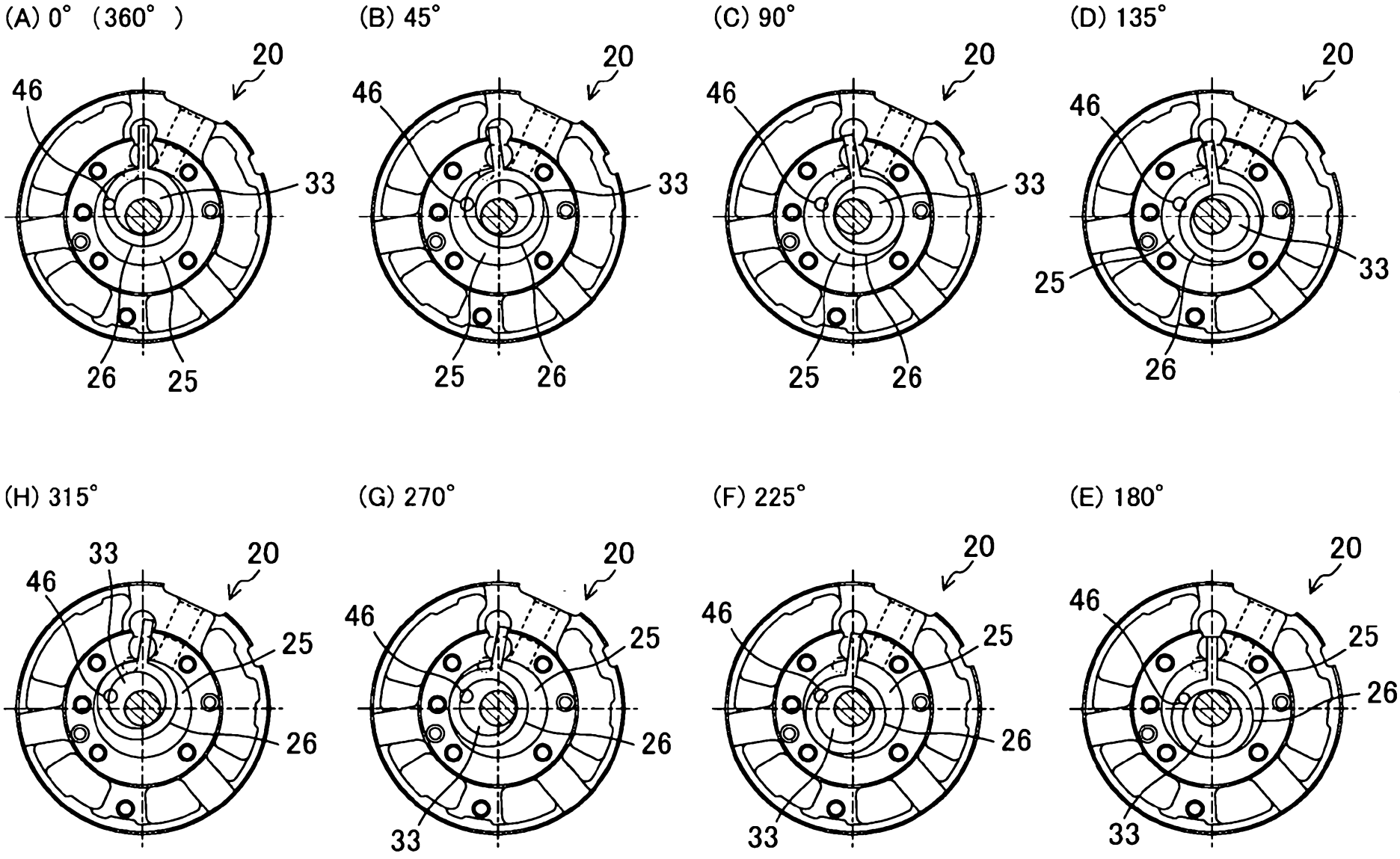

FIG.9

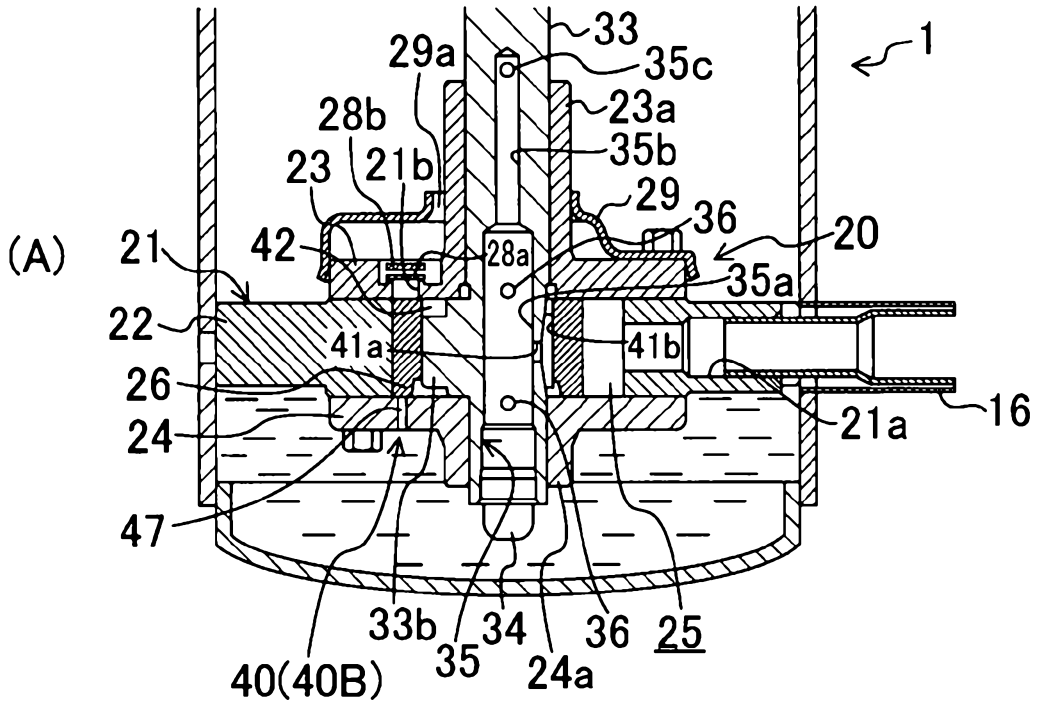
(A)
1
33
35c
29a
23a
28b
35b
23
21b
29
36
20
21
42
28a
35a
22
41a
41b
26
24
21a
16
47
33b
34
36
25
35
24a
40(40B)

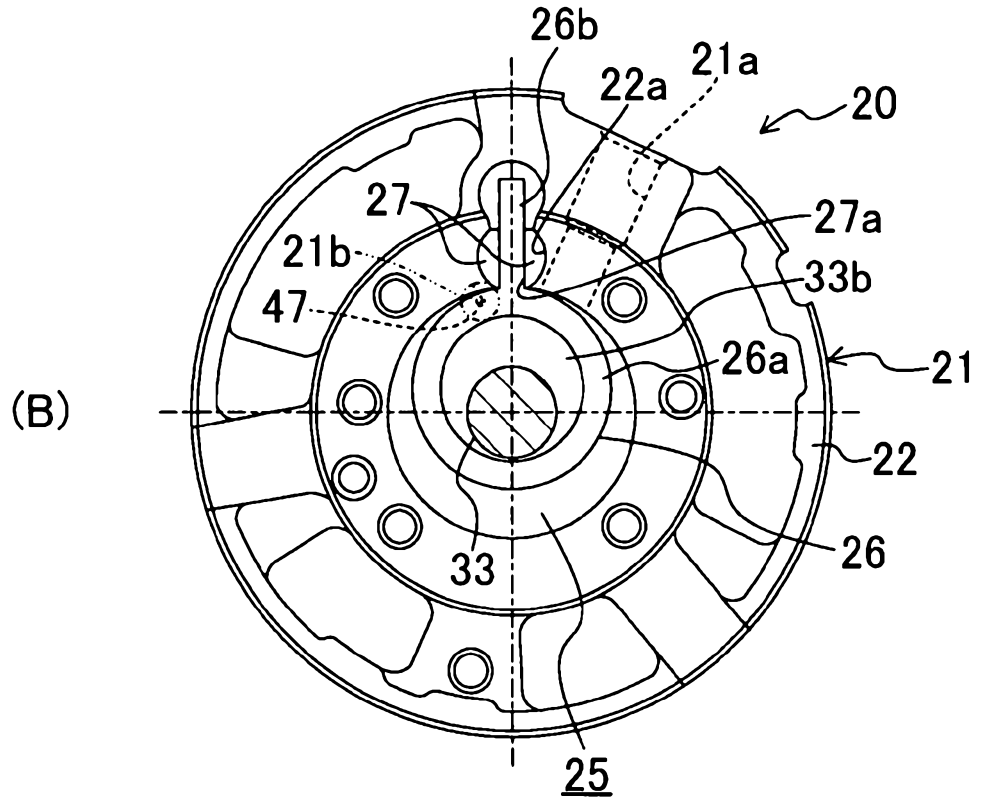
(B)
26b
21a
22a
20
27
27a
21b
33b
47
26a
21
22
26
33
25

FIG.10

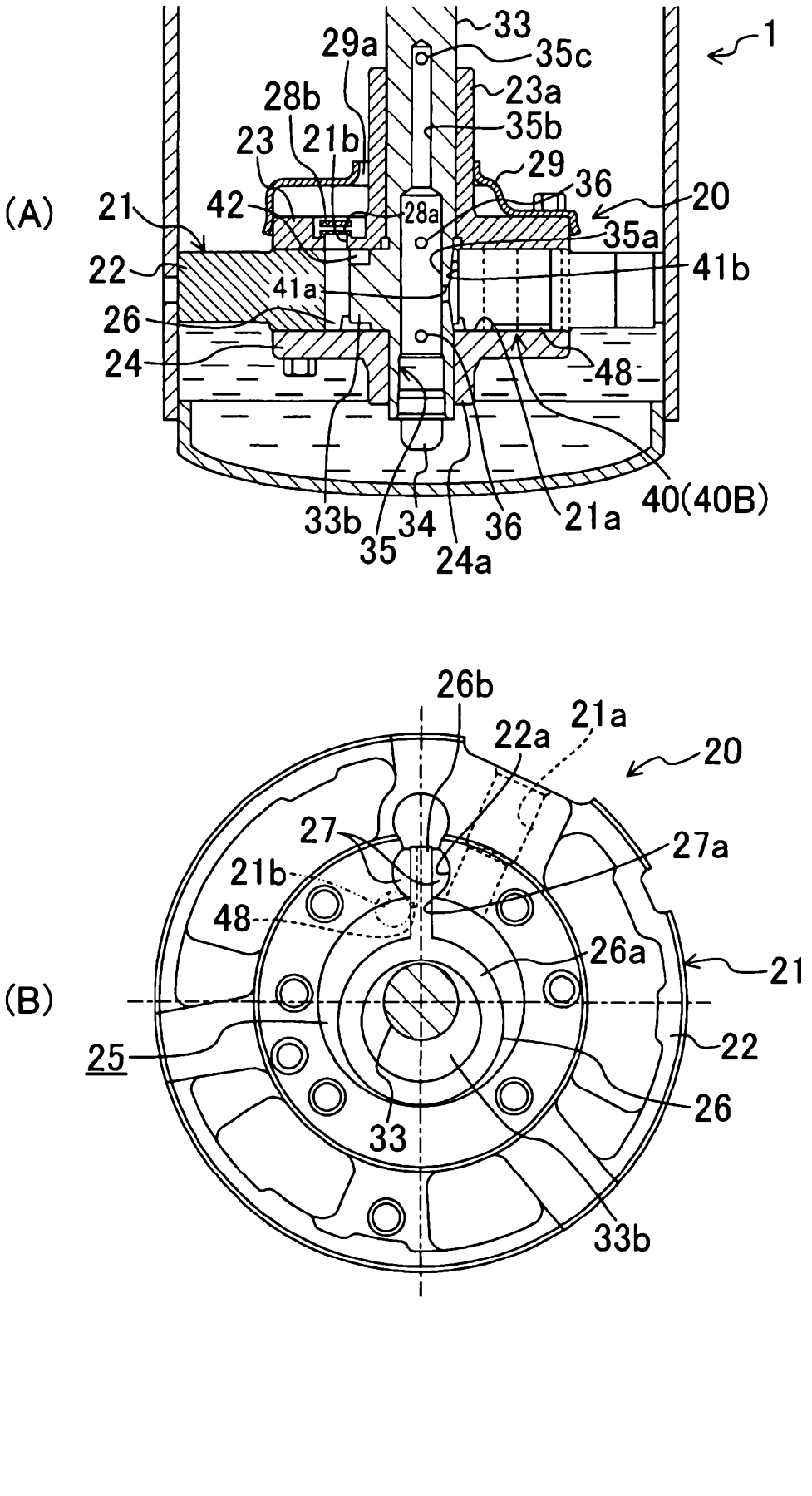
(A)
1
33
35c
29a
23a
28b
35b
23
21b
29
36
21
42
28a
20
35a
22
41b
41a
26
24
48
40(40B)
33b
34
36
21a
35
24a
(B)
26b
21a
22a
20
27
27a
21b
48
26a
21
25
22
26
33
33b

FIG.11

(A)

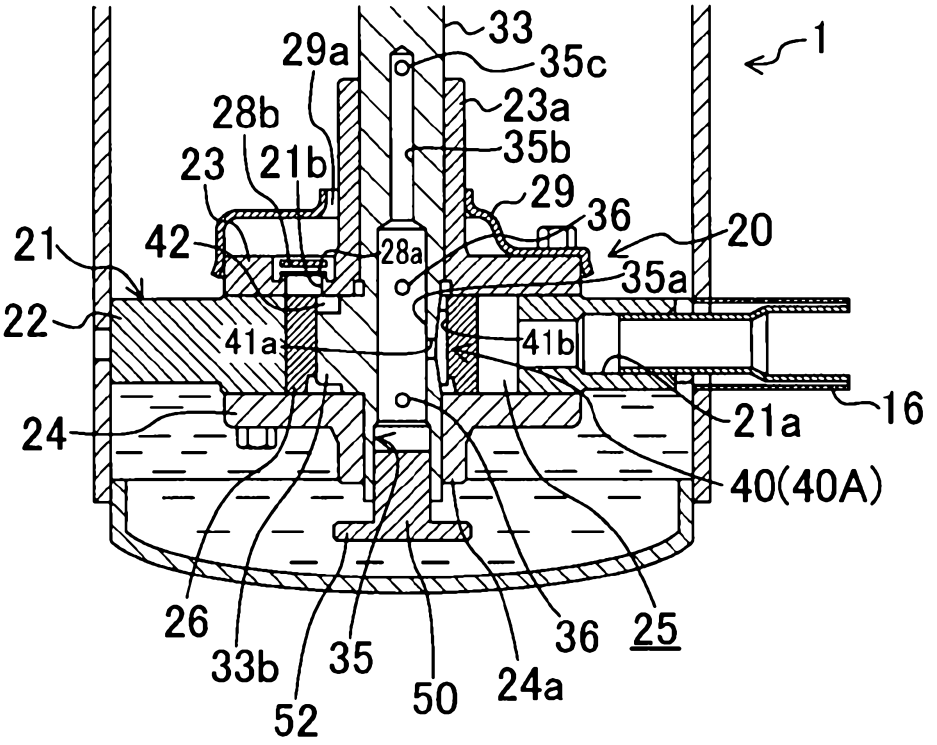
1
33
35c
29a
23a
28b
35b
23
21b
29
36
20
21
42
28a
35a
22
41a
41b
16
21a
24
40(40A)
26
33b
35
36
25
52
50
24a

(B)

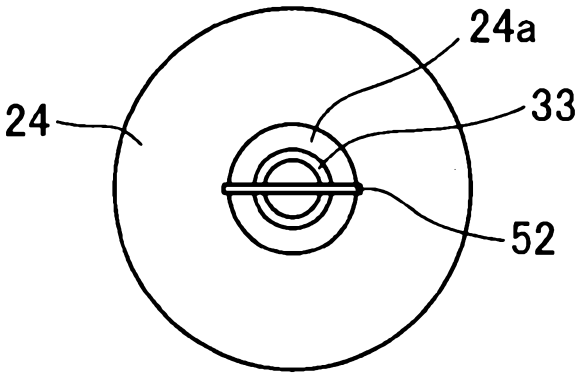
24a
24
33
52