March 13, 1934. L. C. YOUNG 1,950,535

FREQUENCY CONTROL APPARATUS

Filed Oct. 16, 1931 4 Sheets-Sheet 1

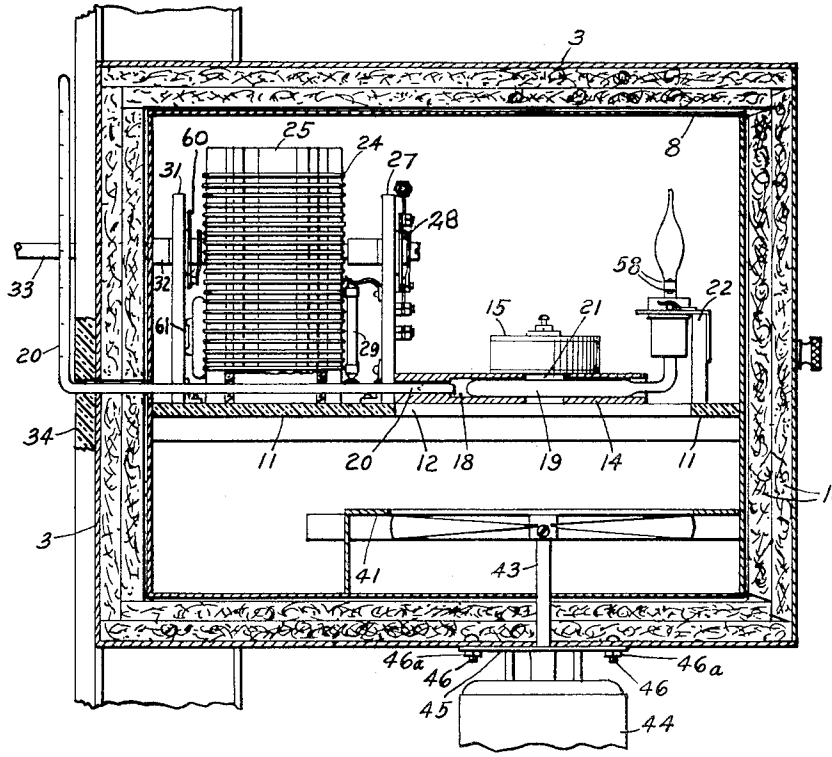

Fig. 2

Fig. 1

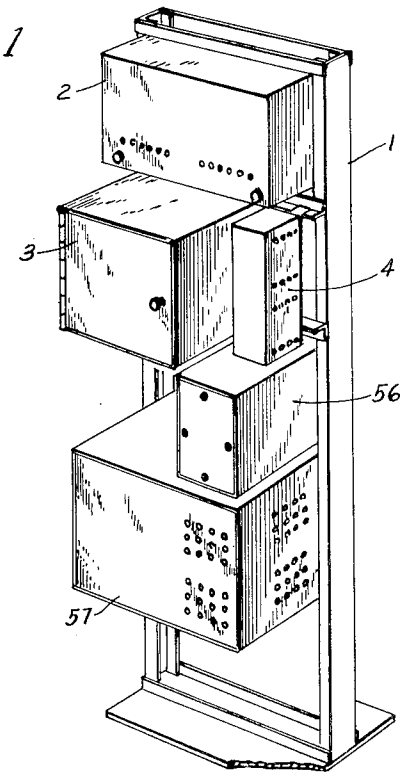

Fig. 11

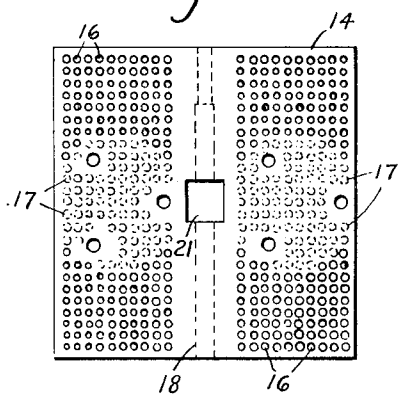

INVENTOR.
Leo C. Young
BY Robert A. Lavender
ATTORNEY

March 13, 1934. L. C. YOUNG 1,950,535

FREQUENCY CONTROL APPARATUS

Filed Oct. 16, 1931 4 Sheets-Sheet 2

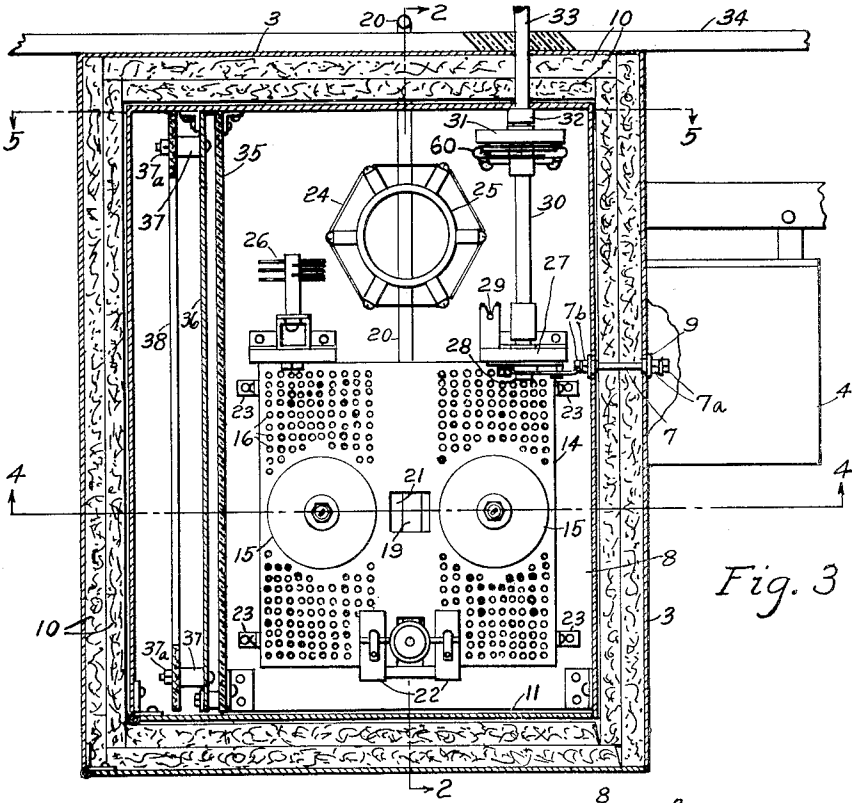

Fig. 3

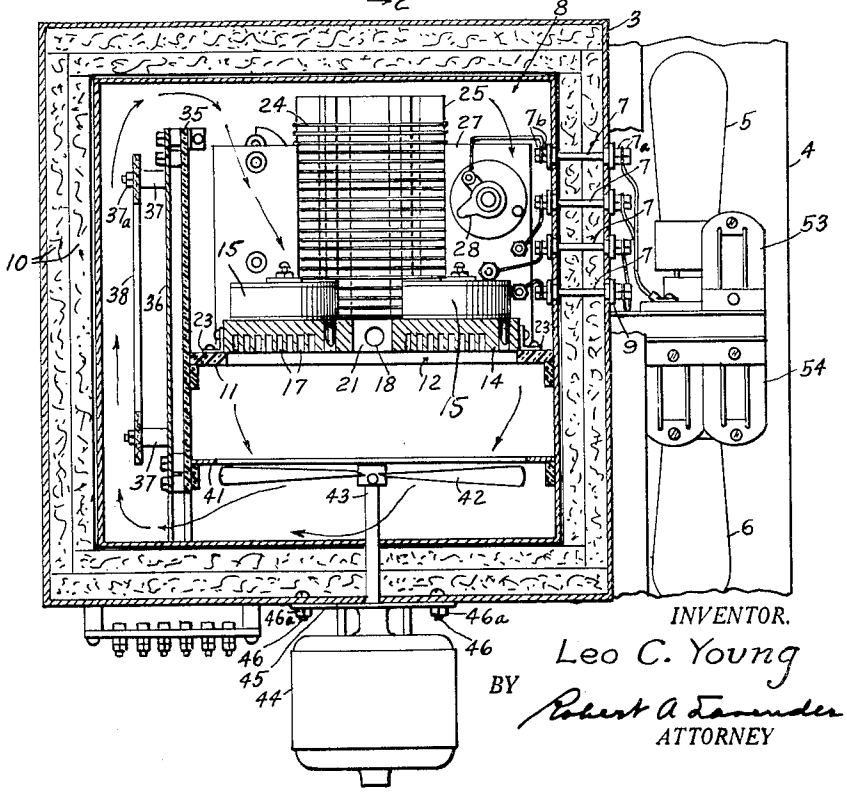

Fig. 4

INVENTOR.
Leo C. Young
BY
Robert A. Lavender
ATTORNEY

March 13, 1934. L. C. YOUNG 1,950,535

FREQUENCY CONTROL APPARATUS

Filed Oct. 16, 1931 4 Sheets-Sheet 3

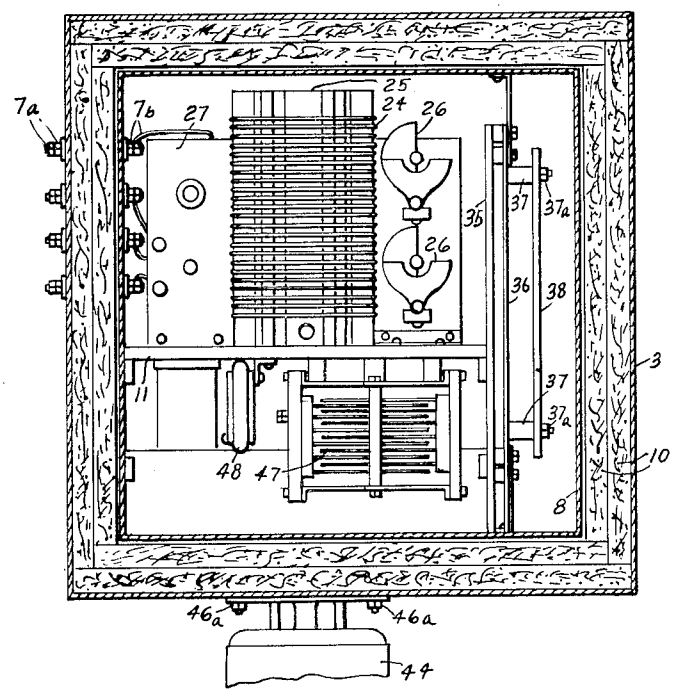

Fig. 5

Fig. 6

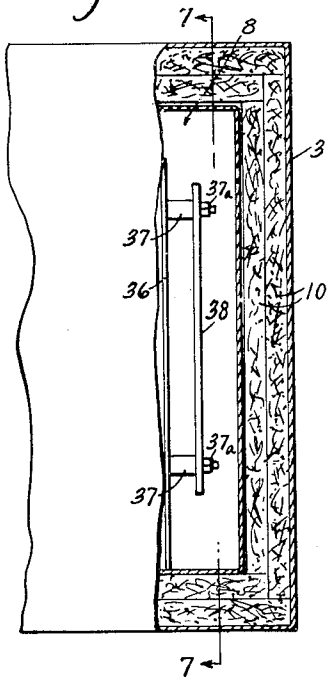

Fig. 7

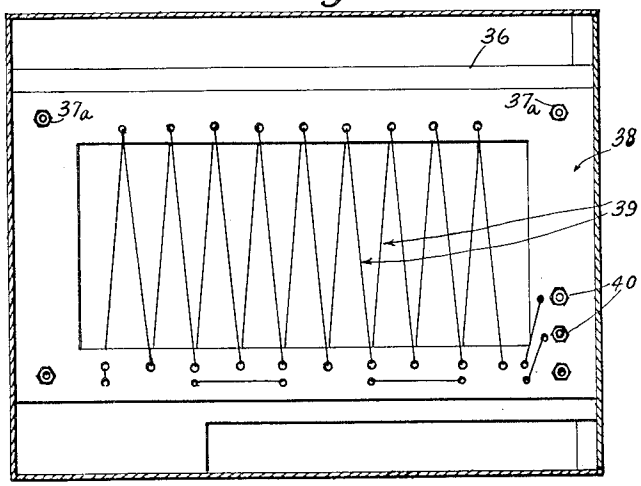

INVENTOR.
Leo C. Young
BY Robert A Lavender
ATTORNEY

March 13, 1934. L. C. YOUNG 1,950,535

FREQUENCY CONTROL APPARATUS

Filed Oct. 16, 1931 4 Sheets-Sheet 4

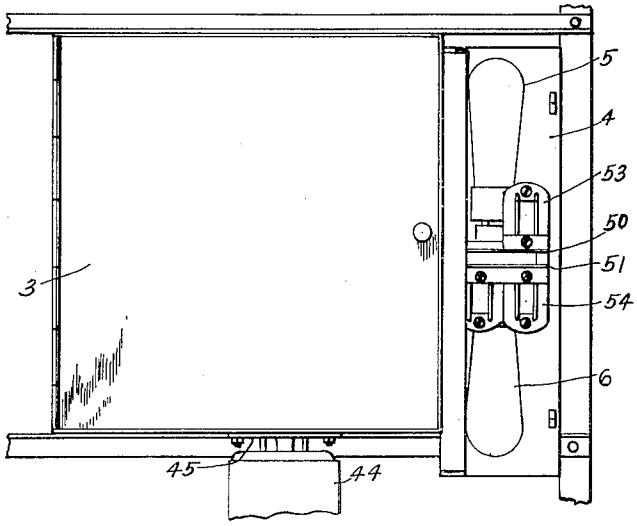

Fig. 8

Fig. 9

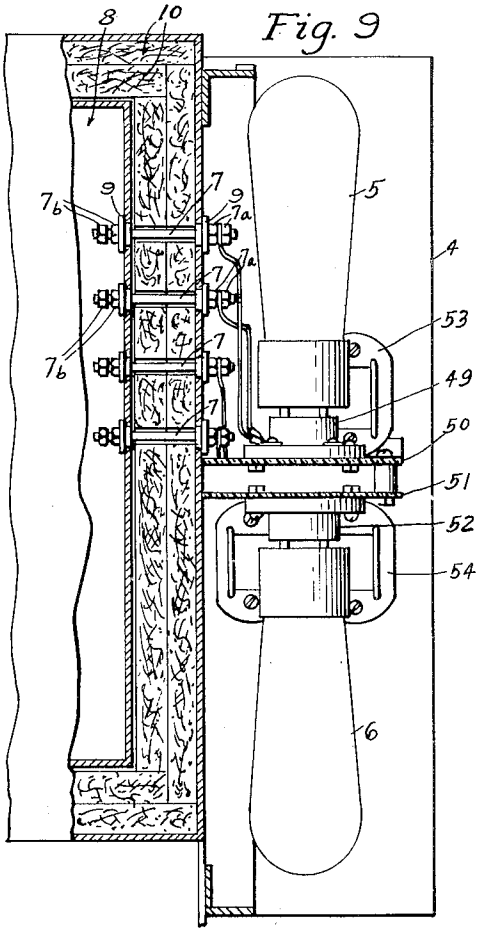

Fig. 10

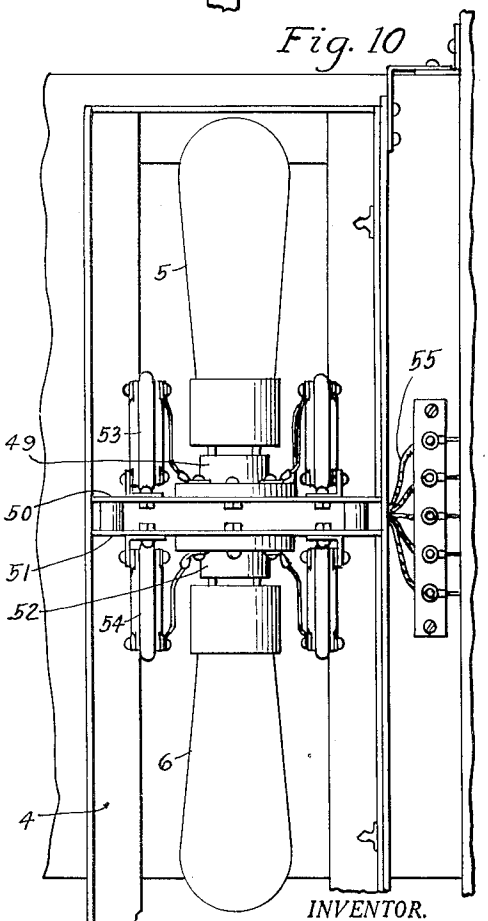

INVENTOR.
Leo C. Young
BY Robert A. Lavender
ATTORNEY

Patented Mar. 13, 1934 1,950,535

UNITED STATES PATENT OFFICE

1,950,535

FREQUENCY CONTROL APPARATUS

Leo C. Young, Washington, D. C.

Application October 16, 1931, Serial No. 569,348

2 Claims. (Cl. 250—36)

My invention relates broadly to high frequency transmission systems and more particularly to a constant frequency control apparatus for high frequency transmission systems.

One of the objects of my invention is to provide a constant frequency control apparatus for high frequency signaling systems wherein electromechanical vibrators and associated circuit elements for an oscillator system may be maintained at constant temperature for insuring the precision operation of the oscillator at constant frequency.

Another object of my invention is to provide a method of mounting a piezoelectric crystal element and associated thermostat and oscillator equipment in such manner that provision is made for control of the thermostat directly from the heat generated by the operation of the crystal itself for rendering the control of temperature adjacent the oscillator more precise.

Still another object of my invention is to provide a construction of constant frequency control apparatus in which piezoelectric crystal devices are mounted immediately adjacent the circuit elements of the oscillator within a temperature controlled cabinet and arranged for the circulation of air currents for insuring the maintenance of constant temperature conditions within the cabinet structure for the precision regulation of the operating frequency of the frequency control apparatus.

A further object of my invention is to provide a method of mounting piezoelectric crystal elements within a temperature controlled cabinet structure upon a perforated supporting plate in such manner that heated air may be circulated immediately adjacent the piezoelectric crystal elements from a position beneath the supporting plate for insuring the maintenance of constant temperature conditions adjacent the elements of the oscillator and adjacent the piezoelectric crystal elements constituting part of the oscillator.

A still further object of my invention is to provide a construction of constant temperature control apparatus for high frequency transmission systems having parts of the heater readily accessible within the constant temperature controlled cabinet for removal and renewal as occasion may require during the life of the frequency control apparatus.

Another object of my invention is to provide an arrangement of temperature control cabinet structure for frequency control devices which is readily insertable in or removable from a heat insulated cabinet to permit the convenient repair and adjustment of the oscillator and electromechanical vibrator equipment within the temperature control cabinet structure.

Still another object of my invention is to provide means for mounting the crystal oscillator tube and the buffer amplifier tube of the transmitter system immediately adjacent the temperature controlled cabinet structure with connections at minimum length to the piezoelectric crystal elements and oscillator elements within the cabinet structure.

A further object of my invention is to provide a method of assembling the various parts of a crystal controlled transmitter on a frame for the efficient transfer of energy from the crystal controlled oscillator tube through the buffer amplifier tubes of the transmitter.

Other and further objects of my invention reside in the construction of frequency control apparatus for high frequency transmission systems as set forth more fully in the specification hereinafter following by reference to the accompanying drawings, in which:

Figure 1 is a perspective view of a transmitter panel showing the arrangement of the parts of the signaling apparatus thereon in accordance with the principles of my invention; Fig. 2 is a lateral cross-sectional view taken through the constant temperature control oscillator cabinet as employed in association with the transmitter apparatus constituting part of my invention, the view being taken substantially on line 2—2 of Fig. 3; Fig. 3 is a plan view taken through the constant temperature controlled cabinet structure showing the arrangement of the elements within the temperature controlled cabinet disposed in accordance with my invention; Fig. 4 is a cross-sectional view taken through the temperature controlled cabinet structure on line 4—4 of Fig. 3; Fig. 5 is a cross-sectional view taken through the constant temperature controlled cabinet structure looking in the direction of line 5—5 in Fig. 3; Fig. 6 is a fragmentary sectional view of a part of the temperature controlled cabinet structure showing the arrangement of the movable heater element within the temperature controlled cabinet; Fig. 7 is an elevational view of the removable heater element looking in the direction of line 7—7 in Fig. 6; Fig. 8 is an elevational view of the temperature controlled cabinet and the cabinet structure which houses the crystal oscillator tube and the buffer amplifier tube according to the principles of my invention; Fig. 9 is an enlarged elevational view showing the manner of establishing connection between the piezoelectric crystal elements

and elements of the oscillator circuit within the temperature controlled cabinet structure; Fig. 10 is a side elevation showing the mounting of the crystal controlled oscillator tube and the buffer amplifier tube in the frequency control apparatus of my invention; and Fig. 11 is a plan view of the supporting plate for the casings which enclose the electro-mechanical vibrators.

The constant frequency control apparatus of my invention has been developed with particular application to high frequency signaling systems employing piezoelectric crystal elements for maintaining the transmission frequency constant. Heretofore it has been sufficient, in order to attain the desired frequency stability, that the temperature control of an electromechanical vibrator should be accurate to within a few degrees. With the advance in the art however, it has become necessary to maintain frequencies to within more precise limits and consequently the actual temperature of the crystal must be maintained constant to within a very small fraction of a degree. Hence the practice has been to raise the ambient temperature of the device in which the crystal is located to well above room temperature, and to have the temperature maintained constant at this high value by means of a thermostat. The thermostat has been actuated almost entirely by changes in the ambient temperature, little or no provision having been made to have the heat generated by the crystal directly affect the thermostat. In the device disclosed therein the crystal heat is conducted directly to the thermostat and by means of the novel design, furnishes part of the heat, when oscillating, necessary to maintain it at a fixed temperature.

To understand fully the reasons for the precision system described herein, it is necessary to review briefly what takes place in an oscillating crystal. The crystal is being mechanically flexed a number of times a second corresponding to the frequency of the crystal. If the crystal happens to be oscillating weakly, the bending of the crystal is small, the stresses are limited and little heat is generated. In the case of a strongly oscillating crystal such as is employed in power circuits, the bending and stresses are much greater and considerable heat is generated. In the course of the investigation leading to this invention, the amount of heat generated in the crystal, due to the stresses set up while the crystal is oscillating, has been measured. The heat generated by a crystal operating at medium power, is on the order of 30 gram calories. The operation of the temperature control equipment is made difficult by the heat generated in the crystal. When the crystal is at rest, no heat is generated. When the crystal is oscillating however, a very considerable amount is generated and must be radiated rapidly.

In the usual crystal temperature control mechanisms, no provision is made to handle the heat generated by the crystal, consequently a thermometer placed with its bulb embedded in the bottom crystal plate will invariably show a rise of temperature of several degrees when the crystal is made to oscillate. This rise of temperature of course causes a frequency shift of .001% to .01% at the end of a few minutes operation. The reasons for temperature control of quartz crystals is to minimize shifts in frequency due to changes in temperature which cause expansion or contraction of the crystal. The temperature control equipment of my invention avoids inaccuracies due to failure to take into consideration the heat generated by the piezoelectric crystal by directly employing the heat generated by the piezoelectric crystal for operating the thermostat in addition to the control of the thermostat by means of the heated air currents which are circulated through the temperature controlled cabinet.

The frequency control equipment of my invention is mounted within a cabinet structure which is readily insertable in or removable from a compartment carried by the transmitter panel, which compartment has a heat insulated lining. Short connectors are removably positioned through the heat insulated wall of the temperature controlled cabinet structure to provide electrical connection between the elements of the oscillator within the cabinet structure to the crystal oscillator tube supported exteriorly of the cabinet structure. Special provision is made for mounting the buffer amplifier tube with respect to the crystal oscillator tube. In order to secure leads of minimum length I mount the buffer amplifier tube immediately below the crystal oscillator tube so that the buffer amplifier tube is directed downwardly while the crystal oscillator tube projects upwardly. The heating element mounted within the oscillator cabinet is readily removable so that when one element is consumed a renewal element may be inserted, such repair and adjustment being made very conveniently by the withdrawal of the cabinet structure from the heat insulated compartment supported by the transmitter panel.

The apparatus of my invention will be more fully understood by a detailed reference to the drawings, wherein Fig. 1 illustrates in perspective view the relative arrangement of the different parts of the oscillator and buffer amplifier panel of a transmitter, constructed in accordance with my invention. The frame of the transmitter has been represented at 1 carrying a compartment 2 which contains the vacuum tube relay and control circuits for regulating filament temperature of the oscillator, controlling the speed of the air circulating fan in the oscillator cabinet and effecting other adjustments of the circuits of the frequency control apparatus. Reference character 3 designates the constant temperature controlled compartment in which the frequency control apparatus of my invention is housed. Reference character 4 designates the compartment which houses the crystal oscillator tube 5 and the buffer amplifier tube 6. The crystal controlled oscillator tube 5 may be for example of 7½ watt size while the buffer amplifier tube 6 may be for example of the screen grid type having a rating of 7½ watts. Extremely short connections are established between the crystal oscillator tube 5 and the elements of the oscillator circuit within the compartment 3 by means of connectors 7 which pass through the walls of the compartment 3 and the cabinet structure 8 as shown. Care is taken to provide insulated bushings 9 for supporting connectors 7 out of contact with the metallic walls of compartment 3 and cabinet structure 8. The ends of connectors 7 are each screw threaded to receive the removable nuts 7*a* at one end and 7*b* at the opposite end for establishing connections between the elements of the oscillator circuit within the cabinet structure 8 and the crystal oscillator tube 5. The entire cabinet structure 8 is readily removable from the compartment 3 by removal of the connectors 7 whereupon the cabinet structure 8 may be horizontally removed by sliding the cabinet structure 8 out of the heat insulating lining 10 provided therearound.

The interior of the cabinet structure 8 is provided with a horizontally extending shelf member 11 having a cut out portion 12 therein over which a massive plate member 14 extends providing the support for the piezoelectric crystal holders represented at 15. Suitable bracket members 23 may be employed centering massive plate 14 over the aperture 12 in the horizontally extending shelf 11. The massive plate 14 is provided with a multiplicity of air passages 16 drilled therethrough immediately around that portion of the supporting plate 14 on which the piezoelectric crystal holders are mounted whereby air may be circulated through the massive plate. In order to increase the radiation surface of the massive plate for heat directly generated by the piezoelectric crystal mounted in holders 15, I decrease the mass of the plate immediately beneath the area over which the piezoelectric crystal holders are supported by the drilling of holes partially into the plate from beneath as represented at 17. The massive plate 14 has an aperture 18 extending longitudinally therethrough for receiving the thermostat 19 and the thermometer 20 as shown. There is a central aperture 21 extending through the massive plate 14 for the passage of air around the thermostat 19 so that the thermostat 19 is subjected to the conductive transfer of heat generated by the piezoelectric crystal as well as the convection heat currents derived from the circulation of heated air through the cabinet structure 8. That is to say, the piezoelectric crystal in generating heat both directly and indirectly controls the thermostat 19, and similarly the circulation of air through the cabinet structure directly and indirectly controls the operation of the thermostat, thereby insuring precision control of the temperature within the cabinet structure.

I have shown the thermostat mounted from a support 22 erected upon the horizontally extending shelf 11. The horizontally extending shelf 11 provides a support for the elements of the oscillator which I have shown as constituted by inductance 24 mounted on vertically extending frame 25 and variable condensers 26. The elements of the oscillator are compactly assembled on the shelf and yet so spaced as to permit circulation of air therebetween. A pair of aligned panel members 27 and 31 are erected on shelf 11. A switch 28 and impedance element 29 is supported on panel 27, the switch 28 being employed to selectively connect the desired piezoelectric crystal element in circuit with the elements of the oscillator for operation upon a selected frequency. An actuating shaft 30 is journaled in bearings carried in panels 27 and 31 and terminates in a coupling head 32. Panel 31 provides a mounting for switch 60 and condenser 61. The switch 60 on panel 31 operates in conjunction with the switch 28 on panel 27 and serves the function of switching one of the variable capacities 26 at the same time that the crystal is changed; in other words, the capacity and the crystal device are switched simultaneously. Shaft 33 extends through the end wall of the cabinet structure 8, heat insulated lining 10, the end wall of the compartment 3 and the transmitter panel 34, to a control knob at the front of the panel. The shaft 33 is connected with shaft 30 through coupling head 32 and operates to rotate shaft 30 from the front of the transmitter panel 34. When the cabinet structure 8 is being moved into the compartment 3, the control knob is removed from the end of shaft 33 and allows shaft 33 to be moved through aligned apertures as heretofore described. The thermometer 20 is removable through aligned apertures in the cabinet structure 8, apertures in the heat insulated lining 10 and an aperture in the transmitter panel 34 as shown, so that the scale of thermometer 20 is visible from the front of the transmitter panel.

Other elements of the oscillator equipment are mounted from the lower surface of the horizontally extending shelf 11 as represented by condensers 47 and 48 suspended beneath the panel. A vertically extending baffle plate 35 is erected within the cabinet structure adjacent the elements of the oscillator and at one side of the horizontally extending shelf 11. The baffle plate 35 terminates short of the top of the compartment 8 and does not extend to the bottom of the compartment 8, thereby dividing the compartment 8 into two sections interconnected at the top and bottom for the circulation of air currents therebetween. The baffle plate 35 provides a mounting for a removable support carrying electric heating elements. The mounting comprises a heat resisting plate 36 which is supported in spaced relation to the baffle plate 35. The heat resisting baffle plate 36 provides a support for a plurality of projecting members 37 upon which the heater panel 38 may be removably mounted. Removable nuts 37*a* provide means for readily inserting the heater support 38 in position or readily removing the heater support from the position shown for allowing repair or renewal of the heater element carried thereby.

I have shown the heater wires on the heater panel placed in the positions indicated at 39 and terminating at binding posts 40 in the panel 38. When the cabinet structure 8 is removed for repair and adjustment, the heater panel 38 is readily removed for effecting repairs and again mounted in operative position. A fan compartment 41 is located adjacent the base of the cabinet structure 8. An air circulating fan 42 is disposed in the compartment 41 and is removably connected to shaft 43 of the removably mounted motor 44. Motor 44 is supported by a plate 45 which is attachable to depending bolt members 46 projecting from the bottom of compartment 3. The motor may be readily assembled or disassembled with respect to compartment 3 by removing fan 42 from shaft 43 and then removing nuts 46*a* from bolts 46 for withdrawing the motor and permitting withdrawal of the cabinet structure 8 from the insulated lining 10 of compartment 3 for effecting repairs upon the parts of the oscillator equipment. As heretofore pointed out, the leads passing through the cabinet structure 8, the insulated lining 10, and the side wall 3 of the compartment are readily disconnected by removing nuts 7*a* and 7*b*, removing connectors 7 and permitting the cabinet structure 8 to be readily withdrawn from the heat insulated lining 10.

The crystal oscillator tube 5 is mounted in a socket 49 carried by horizontally extending panel 50 and supported within the shielded compartment 4. A panel 51 extends parallel to panel 50 and supports socket 52 to provide a mounting for the screen grid buffer amplifier tube 6 as shown. This arrangement of mounting permits the tubes to be inspected and replaced readily and insures minimum length of leads which is highly important in high frequency transmission systems. The panels 50 and 51 provide convenient means for supporting the required fixed condensers 53 and 54 as shown. Fixed condensers 53 are erected vertically on panel 50 while fixed condenser 54 depends downwardly from panel 51 as shown.

The power supply leads for the tubes 5 and 6 are shown at 55. Connections from the buffer amplifier tube 6 extend to the tuning circuit elements housed within the shielded compartment 56 shown in Fig. 1. From the tuning circuit elements from the buffer amplifier 6 leads extend to the circuits of a buffer amplifier tube equipment of high power housed within the shielded compartment 57. From compartment 57 leads extend to an adjacent transmitter panel forming the succeeding unit of the transmission apparatus.

With the fan 42 operated by motor 44, the air within the heat insulated cabinet 8 is circulated as shown by the arrows, passing first around heater wires 39 which are supported by insulated frame 39, the air then being directed down through the holes 16 in the plate 14 and returning to the fan 42. When the temperature of the thermostat 19 reaches a certain value, the mercury will have expanded and contacts 58 will be short circuited which, by reason of relays in an external circuit, will open the supply current feeding heated wires 38 and these wires will cool off. Conversely, when the temperature at the thermostat 19 is of such value that contacts 58 are not short circuited by its mercury column, relays in the external circuit will act so that current is fed through wires 38 and these wires become hot, the heat being transferred then from the wires to the plate through medium of the circulating air.

It will be noted that the thermostat receives heat from three sources. The first source is that of the heater wires 38 from which it is transferred first to the plate through the medium of the circulating air being forced through the holes 16 in the plate 14, and second, from the piezocrystal through the medium of the bottom plate of the crystal holder 15 to the main plate 14 and thence to the thermostat 19 and also from the top electrode in the crystal holder 15 to the side walls thereof to the air and thence to the main plate 14 and thermostat. In both of these cases, the thermostat is acted upon through the medium of the main plate. An additional source of heat to the thermostat is by means of the circulating air column acting directly on the thermostat through the hole 21 in the main plate 14.

In the ordinary case of thermostatic control wherein the thermostat is embedded in a plate, or other object having some mass, there is considerable lag in the operation of the thermostat due to the fact that the mass must first be heated and then cooled by an amount sufficient to operate the thermostat. A considerable amount of time is necessary for the mass to become heated and cooled, so that the thermostat is always lagging and the device to be controlled is alternately warmer and cooler than the desired mean temperature. In the system of my invention however, air as the heating element is made to act in some degree directly upon the thermostat through hole 21 and in this manner the lag is eliminated. In actual operation my system of crystal temperature control has shown itself capable of maintaining the temperature of the crystal to within better than .1° C. at all times whether the crystal is oscillating or not.

While I have described my invention in one of its preferred embodiments, I desire that it be understood that modifications may be made and that no limitations upon my invention are intended other than are imposed by the scope of the appended claims.

What I claim as new and desire to secure by Letters Patent of the United States is as follows:

1. In a frequency control apparatus, a heat insulated cabinet structure, a thermally conductive horizontal shelf disposed in said cabinet structure, a casing containing an electromechanical vibrator supported upon said shelf, said shelf having a central aperture and a longitudinally extending aperture, a thermostat extending through said longitudinally extending aperture and exposed to the passage of air currents through the central aperture therein, said shelf being apertured around the areas thereof on which said electromechanical vibrator casing is supported, and means in said heat insulated cabinet for circulating heated air currents through said apertures for maintaining the temperature within said cabinet structure uniform while said thermostat is subjected directly and indirectly to the heat generated by said electromechanical vibrator and to the convection heat currents circulated within said cabinet structure.

2. A piezoelectric crystal apparatus comprising a temperature controlled cabinet structure, a piezoelectric crystal holder containing a piezoelectric crystal element, a massive thermally conductive plate for mounting said crystal holder, a thermostat mounted adjacent said piezoelectric crystal holder and extending through said massive thermally conductive plate, means for circulating heated air through said heat insulated cabinet structure, said plate being apertured immediately adjacent said thermostat for subjecting said thermostat both to the direct and indirect heat of said piezoelectric crystal element and to the heater air circulated around the casing enclosing said piezoelectric crystal element.

LEO C. YOUNG.