F. STOCK.

RAIL JOINT.

APPLICATION FILED SEPT. 6, 1912.

1,064,786. Patented June 17, 1913.

2 SHEETS—SHEET 1.

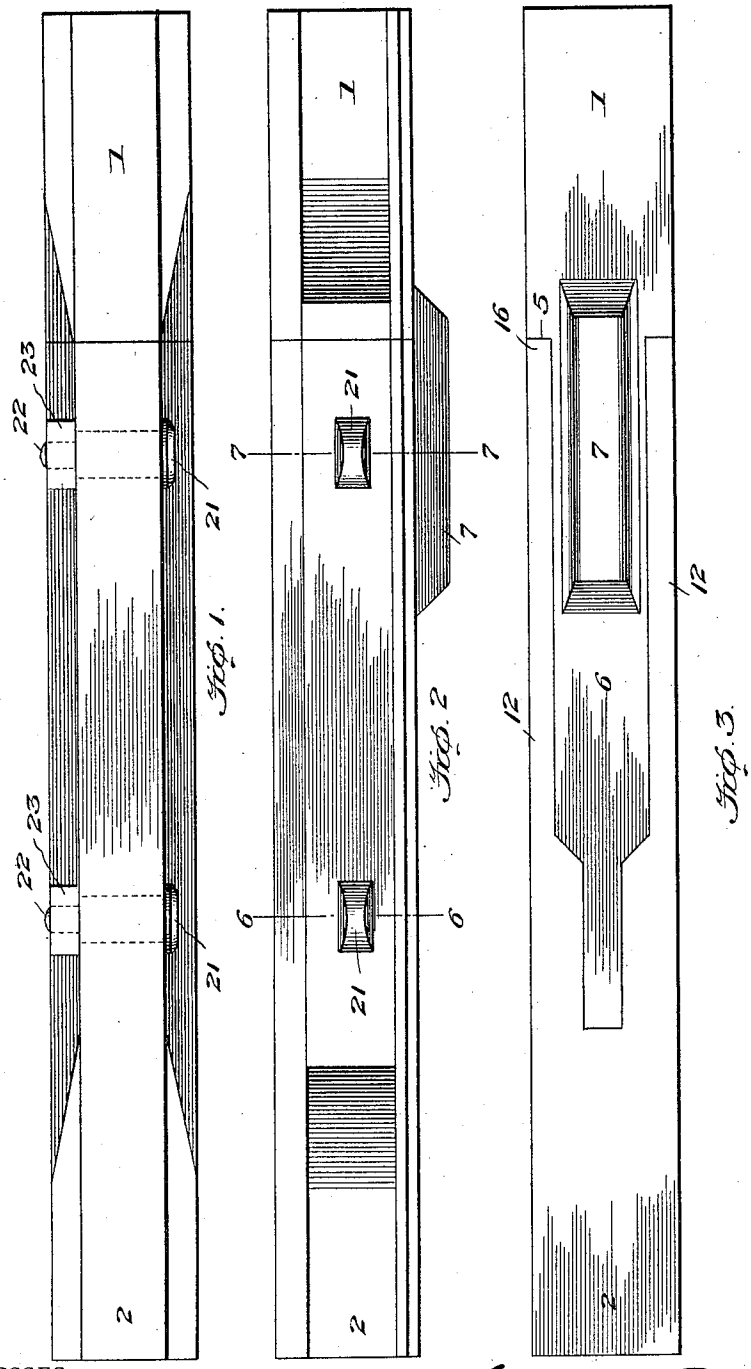

Fig. 1.

Fig. 2

Fig. 3.

WITNESSES

[signature]

S. V. Lockwood

INVENTOR

Ferdinand Stock

by G. O. Hamlin his Attorney

F. STOCK.

RAIL JOINT.

APPLICATION FILED SEPT. 6, 1912.

1,064,786.

Patented June 17, 1913.

2 SHEETS—SHEET 2.

Fig. 4.

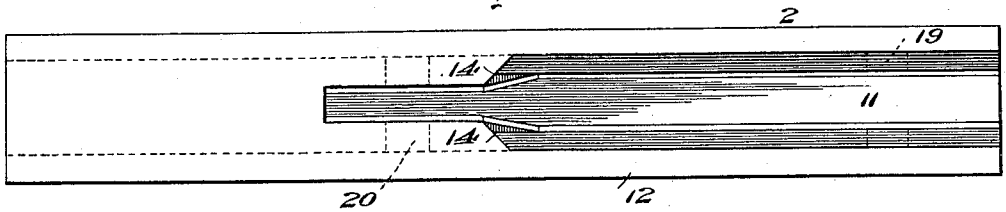

Fig. 5.

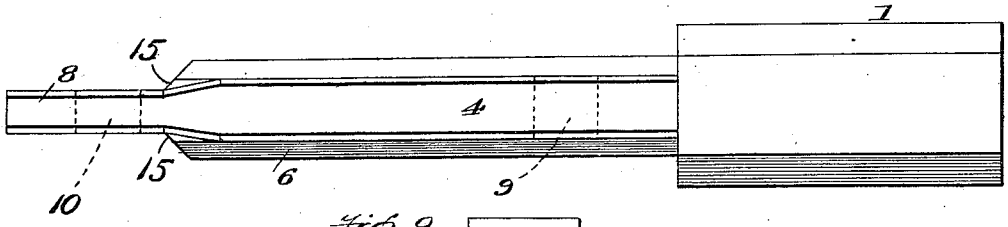

Fig. 9.

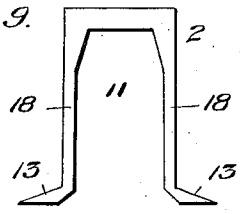

Fig. 6.

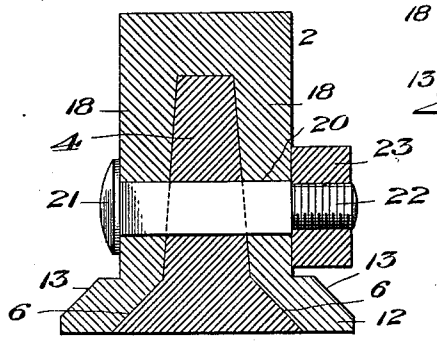

Fig. 7.

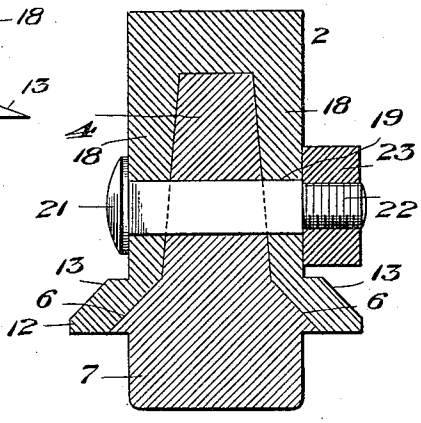

Fig. 8.

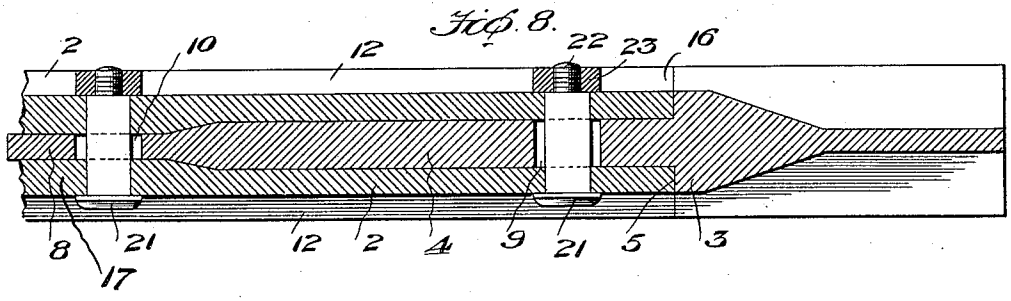

WITNESSES

S. V. Lockwood

INVENTOR

Ferdinand Stock

by G. H. Strauch Attorney

his

UNITED STATES PATENT OFFICE.

FERDINAND STOCK, OF LITTLE ROCK, ARKANSAS.

RAIL-JOINT.

1,064,786. Specification of Letters Patent. Patented June 17, 1913.

Application filed September 6, 1912. Serial No. 719,017.

To all whom it may concern:

Be it known that I, FERDINAND STOCK, a citizen of the United States, residing at Little Rock, county of Pulaski, and State of Arkansas, have invented certain new and useful Improvements in Rail-Joints, of which the following is a specification.

This invention relates to rail joints.

My object is to provide a rail joint of the scarf type wherein what have heretofore been the weak points of joints of this type, will be strengthened and reinforced; further, to provide a joint of this character of novel construction, relatively great length to give it greater strength; and to provide improved means for securing together the parts of the joint.

In my invention the joint is substantially as strong as any part of the rail itself, due to the improvements which I have provided.

The invention is set forth fully hereinafter and the novel features are recited in the appended claim.

In the accompanying drawings:—Figure 1 is a plan view; Fig. 2, a side elevation; Fig. 3, a bottom view; Fig. 4, a bottom view of the mortise section; Fig. 5, a plan view of the tenon section; Fig. 6, a section on line 6—6, Fig. 2; Fig. 7, a section on line 7—7, Fig. 2; Fig. 8, a longitudinal section through the complete joint; and Fig. 9, a detail end view of a modified form of mortise.

The rail ends are shown at 1 and 2, the former having its web thickened at 3 where the tenon 4 joins said rail end, said tenon being thicker than the web of the rail but of less thickness than the part 3 so that there is provided a shoulder 5 at the end of the rail 1, and because the upper edge of the tenon 4 is below the head of the rail 1 and the base 6 of the tenon is of less width than the base of the rail, this shoulder 5 extends on both sides of the tenon 4. The base 6 is provided with sloping edges where it joins the tenon 4 for a purpose which will appear hereinafter.

The base 6 and the base of the rail have a reinforce 7 which is provided at one of the points of greatest strain and of weakness in joints of this character, viz., at the heel of the tenon. This reinforce 7, by trussing the joint at this point, prevents any weakness or danger of breakage.

The end part 8 of the tenon is reduced in thickness and the base 6 terminates where this reduced part begins. As will presently appear, this reduced part is provided for the purpose of permitting reinforcing of the other part of the joint at a point which is usually weak in scarf joints. Through the main portion of the tenon 4 and the reduced part 8 thereof extend elongated openings 9 and 10, respectively.

The rail section 2 has an end which is box-like in form and constitutes a mortise 11 to receive the tenon of the rail section 1. Preferably, the body of the tenon 4 is downwardly flared in cross-sectional shape and the mortise 11 is upwardly flared, or the mortise may be only partly flared to mate or fit the tenon 4, as shown in Fig. 9. The base flange 12 of the section 2 is provided with outwardly flared parts 13 which are at an angle corresponding to that of the parts 6, and when the joint is connected, the parts 13 rest upon the parts 6 and the shoulders 14 bear against the corresponding shoulders 15 on the base 6. The end 16 of the section 1 abuts the shoulder 5.

The heel of the mortise of scarf joints is usually a weak part of the joint. To overcome this defect, I make the end part 8 of the tenon of reduced width or thickness so that the thickness of the web of the section 2 may be increased internally, as shown at 17, thus reinforcing this part and adding strength thereto just as the external reinforce 7 adds strength to what is usually the weakest part of the tenoned section of a scarf joint.

To obtain the requisite strength, the walls 18 of the mortise 11 are formed flush with the outer edges of the head of the section 2, and in said walls are provided elongated slots 19 and 20 adapted to aline with the slots 9 and 10 when the joint is together. The slots 9 and 10 are longer than the slots 19 and 20 to permit expansion and contraction of the rails.

Passing through the slots 9 and 19 and 10 and 20, respectively, are flat bolts 21 whose shanks are of a size to snugly fit the openings 19 and 20, but are somewhat shorter than the slots 9 and 10 to permit the expansion and contraction of the rails, the said bolts having screw-threaded ends 22 for the reception of suitable nuts 23.

In assembling my joint, the section 2 can be dropped on the section 1 and the slots then coming into register, the bolts 21 can be quickly passed through the slots and the

nuts 23 applied. The joint is practically as strong as any integral part of the rails.

Having thus described my invention, what I claim as new and desire to secure by Letters Patent, is:—

In a rail joint, the combination with a rail end having a tenon which flares downwardly and is provided with a beveled base and with a baseless end which is reduced in thickness, said rail end being thickened where it joins the tenon, and a truss being provided on the base of the rail end and the base of the tenon, of another rail end provided with a downwardly flared mortise and beveled lower parts respectively receiving and fitting the tenon and the base thereof, said mortise being provided with a constricted inner end portion receiving the reduced end portion of the tenon.

In testimony whereof, I hereunto affix my signature in presence of two witnesses.

FERDINAND STOCK.

Witnesses:
W. A. Hicks,
F. S. Wellman.

Copies of this patent may be obtained for five cents each, by addressing the "Commissioner of Patents, Washington, D. C."