Aug. 11, 1925. 1,549,400

H. WIMLER

FISHERMAN'S CABINET

Filed Oct. 9, 1922

Fig. 1.

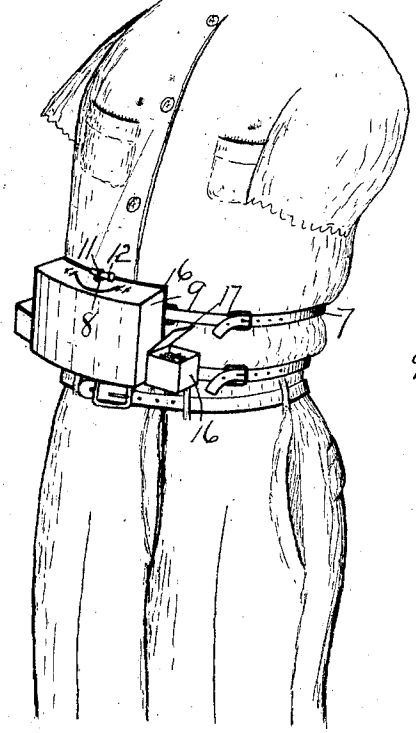

Fig. 2.

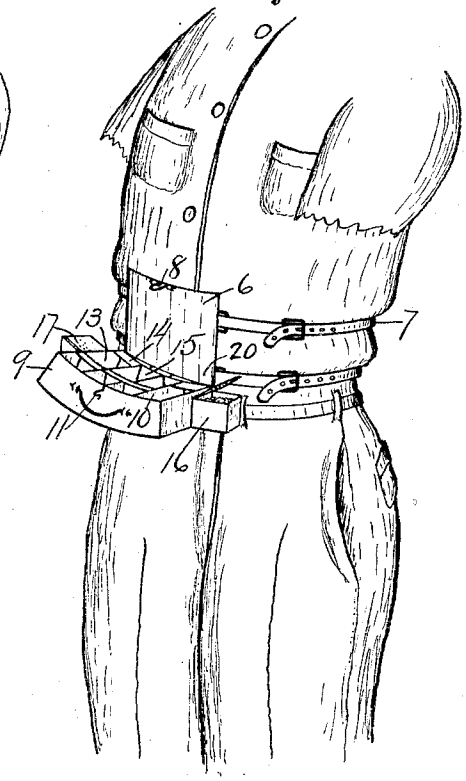

Fig. 3.

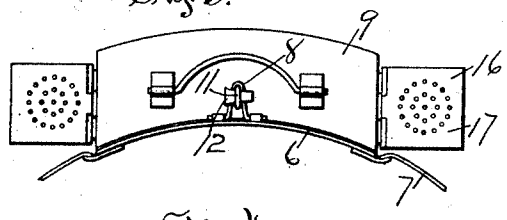

Fig. 4.

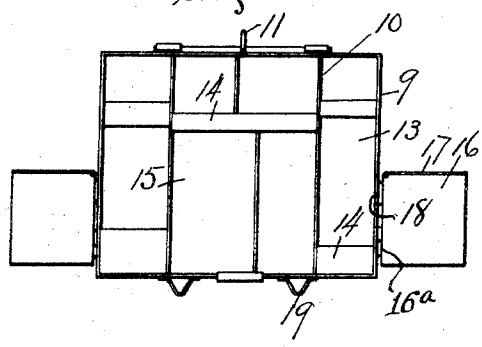

Fig. 5.

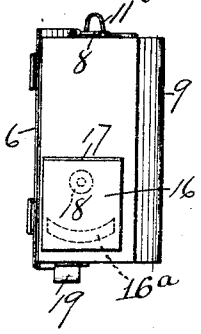

INVENTOR
Herman Wimler,
by
Arthur B. Jenkins,
ATTORNEY

Patented Aug. 11, 1925. 1,549,400

UNITED STATES PATENT OFFICE.

HERMAN WIMLER, OF MIDDLETOWN, CONNECTICUT.

FISHERMAN'S CABINET.

Application filed October 9, 1922. Serial No. 593,202.

To all whom it may concern:

Be it know that I, HERMAN WIMLER, a citizen of the United States, and a resident of Middletown, in the county of Middlesex and State of Connecticut, have invented a new and Improved Fishermen's Cabinet, of which the following is a specification.

My invention relates to the class of devices more commonly employed by fishermen to contain fishing tackle, bait, and the like, and an object of my invention, among others, is to provide a device that shall be extremely convenient for any of the uses common to the art of fishing.

One form of device embodying my invention, and in the construction and use of which the objects herein set out, as well as others, may be attained, is illustrated in the accompanying drawings, in which—

Figure 1 is a view showing my improved device as supported in place for use.

Figure 2 is a similar view but showing the device open.

Figure 3 is a detail top view of the device, scale enlarged over the showing of Figures 1 and 2.

Figure 4 is a view in elevation of the cabinet looking into the same, the cover being removed.

Figure 5 is an end view of the cabinet.

My improved cabinet comprises a back or base 6 that is formed of any suitable material, as thin metal or wood, and that is curved to fit the body of the wearer, the cabinet usually being worn immediately at the front or at one side of the front of the person. This back or base is provided with supporting straps 7 that may be passed around the body of the person and fastened in any suitable manner. The top of the back is provided with a hasp 8 as a means for securing the cabinet 9 in its closed position. A hinge or hinges of any suitable construction may be employed to secure the cabinet to the back, and such hinge or hinges may be located at or near the crosswise center, as shown in Figure 4 of the drawings.

Said cabinet is formed of any suitable material and is of box form with partitions 10 that may be arranged in any suitable manner, in such positions as may be desired to produce compartments of suitable shape. The cabinet as a whole is curved to correspond with the curve of the back or base 6, and a loop 11 projects from the top of the cabinet to be received within the hasp 8, a plug 12 being employed, if desired, to secure the parts together.

The back 6 is preferably a thin plate and the compartments 13, formed by the partitions 10, may have front pieces 14 closing the bottom portions of the pockets at the front thereof, forming pockets at the bottoms of the compartments, as shown in Figure 2 of the drawings, and other compartments 15 may be open for their whole dimensions, the pockets being for the reception of hooks, sinkers and the like, while the compartments 15 may be for the purpose of receiving lines, artificial bait, &c.

Bait boxes 16 are pivotally supported on opposite sides of the cabinet 9, these boxes being of any suitable form and having hinge covers 17. These boxes are pivotally mounted as upon pivots 18 horizontally arranged so that they will freely turn upon a horizontal axis and thereby always maintain an upright position irrespective of the position of the body of the wearer. Stops 19 extend from the bottom of the cabinet 9 to be received against the edge of the back or cover 6 and thereby limit the opening movement of the box or cabinet so that it will not swing too far downward. It will be noted that in lieu of these stops the corners 20 of the cover, owing to the curved construction of the parts, will pass underneath the bottom edge of the box as it is opened and thereby form stops to limit downward movement. The bait boxes 16 carry arcuate strips 16^a that engage the end walls of the cabinet 9 to maintain the boxes and the cabinet separated to insure free pivotal movement of the boxes.

In accordance with the provisions of the patent statutes I have described the principles of operation of my invention, together with the device which I now consider to represent the best embodiment thereof; but I

desire to have it understood that the device shown is only illustrative and that the invention may be carried out by other means.

I claim—

In a device of the class described, a pair of receptacles having hinged covers, the receptacles being disposed in end engagement and pivotally connected in a manner to permit one receptacle constantly to assume an upright position upon swinging movement of the other receptacle, the hinged cover of one receptacle maintaining a vertical position when the receptacle is swung to an open horizontal position and the other receptacle being automatically positioned to have the cover thereof swung upwardly.

HERMAN WIMLER.