Sheet 1-2 Sheets.

Richards & Wolcott.

Diving Bell.

No. 6,250. Patented Apr. 3, 1849.

Fig. 1

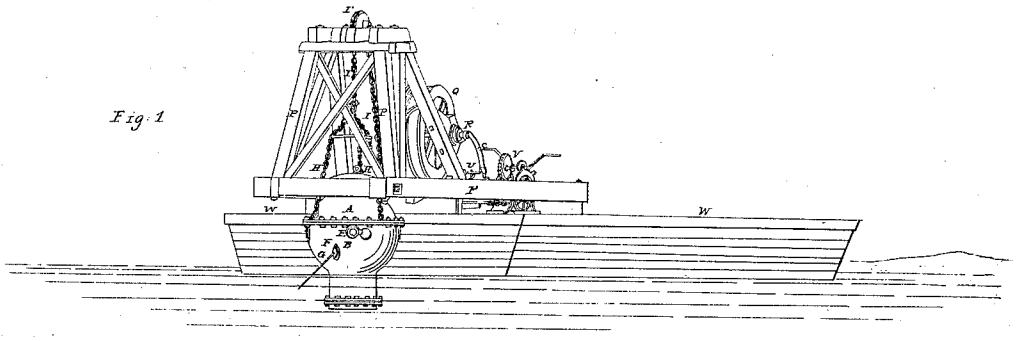

Fig. 2.

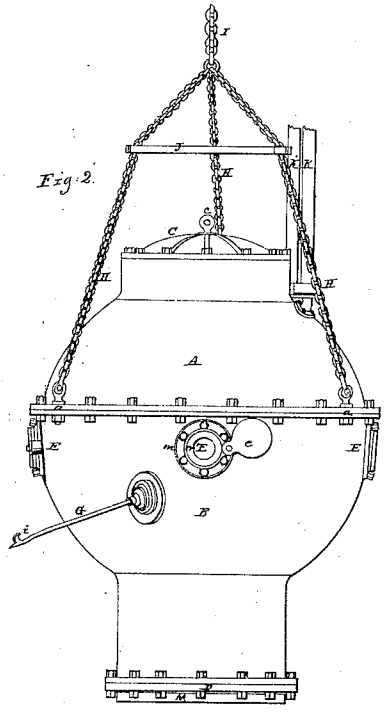

Fig. 3

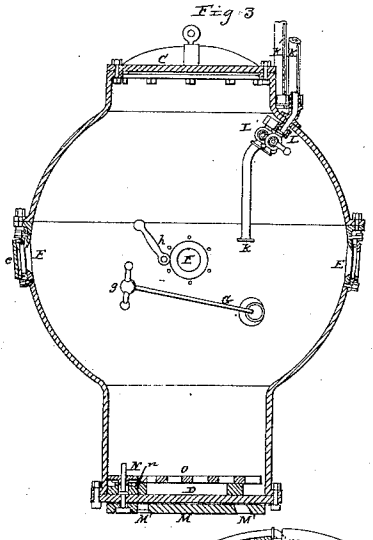

Fig. 4.

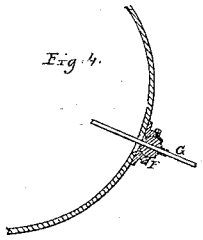

Fig. 5.

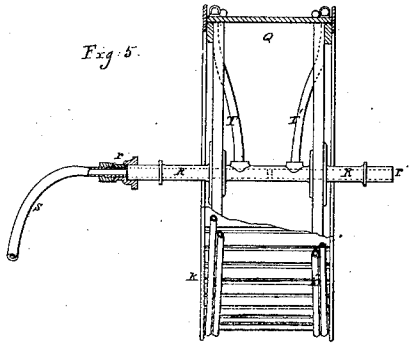

Fig. 6.

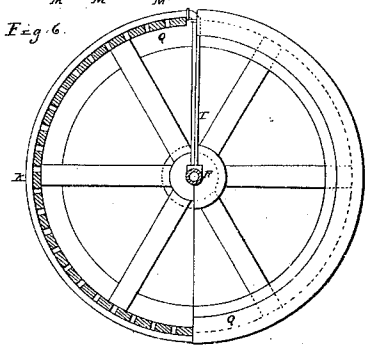

THE GRAPHIC CO. PHOTO-LITH. 39 & 41 PARK PLACE, N.Y.

Sheet 2-2 Sheets.

Richards & Wolcott.

Diving Bell.

No. 6,250. Patented Apr. 3, 1849.

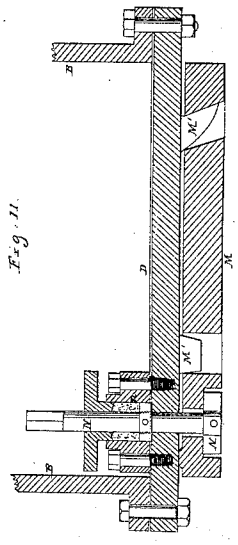

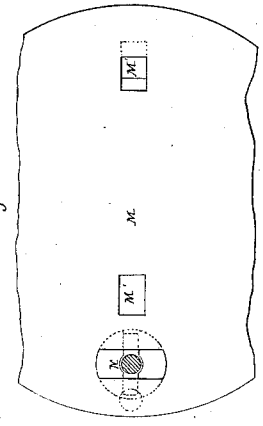

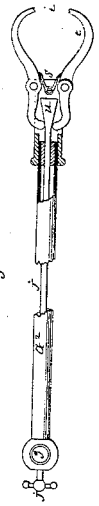

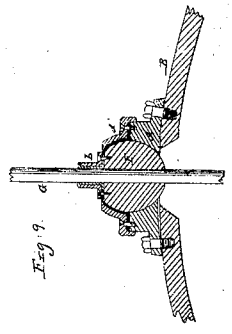

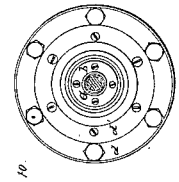

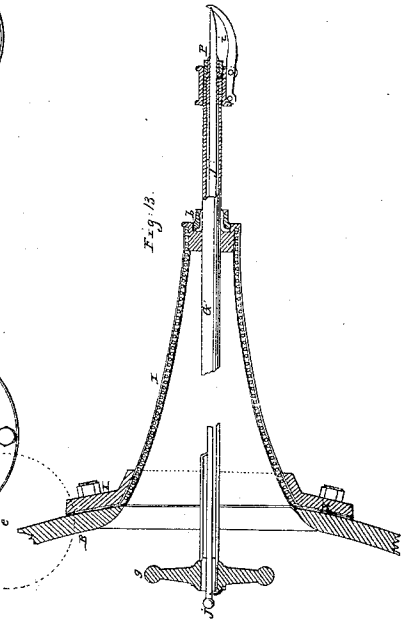

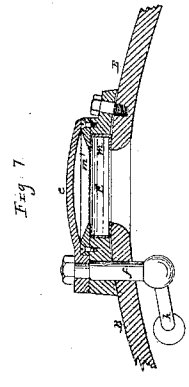

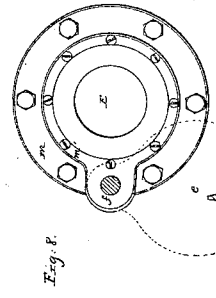

THE GRAPHIC CO. PHOTO-LITH. 39 & 41 PARK PLACE, N.Y.

UNITED STATES PATENT OFFICE.

J. AVERY RICHARDS AND JOHN W. WALCOTT, OF BOSTON, MASSACHUSETTS.

DEEP-SEA-DIVING BELL.

Specification of Letters Patent No. 6,250, dated April 3, 1849.

To all whom it may concern:

Be it known that we, J. AVERY RICHARDS and JOHN W. WALCOTT, of Boston, in the county of Suffolk and State of Massachusetts, have invented certain new and useful Improvements in Apparatus for Diving and Working in Deep Water, called a "Deep-Sea-Diving Bell"; and we do hereby declare that the following is a full, clear, and exact description of the construction and operation of the same, reference being had to the annexed drawings, making part of this specification, by which it may be distinguished from all other machines for like purposes.

Figure 1, of the drawings is a perspective view of the bell with its accompanying apparatus, mounted upon a scow and ready for operation. Fig. 2, is an elevation of the bell to a larger scale showing more particularly the manner of its construction. Fig. 3, is a vertical section of the same through the center. Figs. 4, to 14, represent the different parts of the apparatus in detail, and, will be severally referred to in the description as occasion shall require.

The letters refer to the same parts in all the figures.

The main part of the bell is formed of two large hemispherical pieces of cast iron A, B, of the form shown in the drawing, which are bolted together by flanges at *a*, as shown; and are made sufficiently strong to resist any required pressure.

C, is the cover which closes the upper extremity, and which also serves for a door or place for entrance, and is made to be removed at pleasure. *c* is an eye fixed on the top of the same by which it is raised and removed.

D, is the plate that closes the lower extremity, and is permanently fixed to the same by a flange and bolts as shown.

E, E, &c., are windows or lights of thick plate glass set in frames *m*, *m'*, and made perfectly water tight through which light is admitted into the bell, and exterior objects are examined. They are shown in detail in Figs. 7, and 8.

e, *e*, &c., are shutters to the same. They are made to fit close to the frame *m'* upon the outside, and swing laterally upon the stud *f* which passes through a stuffing box, into the bell, and is provided with a handle *h*, by which they are opened and closed. Their object is to protect the glass from accident and in case of breaking the same to prevent the bell from filling with water.

F *d* is a ball and socket joint made of brass and ground to fit each other water-tight, and firmly bolted to the bell as shown at Fig. 4, and in detail at Figs. 9, and 10; through which the rod G passes.

G is the working rod (so called) by means of which external objects are operated upon. It is made at its outer end *i* in the form of a hook, pike, scoop, forceps or other shape as experience shall show to be most convenient. The rest of the roll is turned straight and polished and passes through the ball F and is made water tight in the same by the leather packing *b*, or other similar contrivance which shall effect the same purpose. By this means the rod G can be drawn in or out or moved laterally in any direction.

g is a handle upon the end of the roll G within the bell which serves to assist in moving it and also to prevent it from being accidentally withdrawn. There may be as many of the rods G and windows E, and arranged in such position as experience shall show to be most convenient.

H, H, &c., are chains which are attached at one end to an eye bolt in the flange *a* and at the other to the main chain I by which the bell is suspended from the frame P upon the scow at the surface as shown in Fig. 1. The chain I passes over the pulley I' at the top of the frame P and downward to the windlass or crab V, by which the bell is raised or lowered as required.

J is a spreader to separate the chains H for greater convenience in raising the cover C.

K, K', are flexible pipes or hose, made like what is usually called "suction hose", and of sufficient strength to resist any required pressure, through which a circulation of air is maintained within the bell. They are attached to the bell at their lower ends in the manner shown and at their upper ends to the drum Q Fig. 1, upon which they are coiled when the bell is at the surface. The air is injected by a pump, bellows, fan-blower, or other similar means, into the pipe K and escapes by the other, K'.

L L' are cocks upon the air pipes K K', within the bell, to close in case of accidents.

k, is a continuation of the pipe K′ to which the operator applies his mouth when conversing with the manager at the surface.

M is a heavy piece of iron for ballast. It is suspended from the bottom of the plate D (Figs. 11 and 12) by the snugs M′ M′ (which are cast upon it) and the button-headed bolt N which passes through the stuffing box *n*, into the bell. By turning this the ballast piece M, can be detached at pleasure. It is made of such a weight that when detached, the bell with the inclosed workman becomes buoyant and floats to the surface. It is intended to be used only in case of breaking the suspending chains or other accident.

O is a wooden grating upon which the workman stands.

P is a frame made of timber and firmly attached to the scow W Fig. 1, as shown. It carries the large pulley I′ over which the chain I passes by which the bell is suspended; and also the drum Q upon which the air pipes K K′ are coiled as before described. The drum is shown on a larger scale in Figs. 5, and 6, which are two views of it, part of each in section. It is mounted upon the hollow shaft R upon which it revolves. The bore of the shaft does not extend through it but is separated in the middle as shown by the dotted lines Fig. 5.

T T′ are two pipes which lead from the bores of the hollow shaft R to the periphery of the drum; and to each of which, one of the air pipes K K′ are attached so that there is an unbroken and separate communication between each of the extremities of the shaft R and the interior of the bell.

r is a swivel coupling by which the pipe S which leads from the air pump U is attached to the shaft R and permits it to revolve. The air is injected into the bell through the end *r* of the shaft R and escapes from the opposite end *r′* of the same. Through this last, conversation can be held with the workman within the bell with ease.

W (Fig. 1,) is the scow upon which the whole apparatus is mounted.

X Fig. 13, represents a flexible arm which may be used instead of the ball and socket F in certain cases. It is made of caoutchouc or any impervious flexible substance; in the form of a conical tube with the small end outward; and fortified on its inside by a coil of wire or rings of sufficient strength to resist compression; in the same manner as the air-pipes before described. At its outer end it is provided with a brass socket and leather packing *b* which fits the rod G similar to the ball F, Fig. 9. The other end of the flexible arm X is attached to the bell by the flange *x*, as shown in the drawing. G′ in this figure represents another manner of constructing the working rods. It is made hollow and has another smaller rod *j* working within it; also provided with a leather packing at *p*. Its action is sufficiently obvious.

G², Fig. 14 represents another form of working rod furnished with a pair of forceps *t*, *t*, which are opened by the spring *s*, and closed by the wedge *u* which is attached to the rod *j*. The different forms of working rods may be used with the ball and socket F or elastic arm X as circumstances shall require.

When it is not required to work at great depths this bell may be used as a common diving bell by removing the bottom D and attaching to it a corresponding weight of ballast.

The operation of the machine is as follows: The workman being inside, with compass, lamp, and other necessary tools; and the cover C secured to its place the bell is lowered away and warped into any required position from directions given by him through the deduction air pipe K′ as already described. It may be moved small distances or swung round by means of the working rods. As the bell descends the air pipes K K′ are uncoiled from the drum Q to the extent required. The circulation of air is maintained by the air pump U as already described. When the bell is in the required position, the necessary examinations are made and reported to the manager at the surface; and by means of the working rods G various operations such as hooking chains, guiding grapnels, passing lines, picking up small bodies, etc., can be performed with facility as the objects are immediately under the eye of the workman. While by maintaining the air within the same at atmospheric pressure, the workman is enabled to remain in it as long as may be required.

It is well known to those familiar with the use of diving bells and diving dresses or submarine armor of the ordinary construction that it is impracticable to work them at a greater depth than sixty feet from the surface of the water on account of the external pressure. In the bell the air becomes so compressed as to render respiration exceedingly difficult and in the diving dresses or armor the pressure upon the body produces an equally pernicious effect and often serious accidents such as suffocation and rupturing blood vessels; and the pressure upon the limbs is such as to stop the circulation of the blood and render the diver incapable of using them. But it is often necessary to descend to much greater depths as in the case of operating upon wrecks and making submarine examinations and other works of like nature.

To meet such extreme cases is the object of this invention. By the closed bell the diver is entirely isolated from the surround-

ing pressure; by the combination of air pipes, drum and blowing apparatus with the bell, he is supplied with air at atmospheric pressure and communicates with the surface at any depth, and by the working rods he operates upon external objects.

Now we do not claim as our invention, the closed bell of itself, as a closed bell or vessel has already been used for submarine purposes; neither do we claim the attachment of two pipes both leading from the bell to the surface one for the ascending and the other for the descending current of air as that has heretofore been done, but

What we do claim as our invention and desire to secure by Letters Patent, is—

The combination of working rods with the diving bell by means of ball and socket joints or their equivalents substantially as herein set forth.

Signed by us this 19th day of Febraury A. D. 1849.

J. AVERY RICHARDS.
J. W. WALCOTT.

Witnesses:
THOS C. HIBBARD,
CALVIN BROWN.