April 26, 1960 WING G. CHENG 2,934,635

PORTABLE ILLUMINATING DEVICE

Original Filed June 22, 1956 2 Sheets-Sheet 1

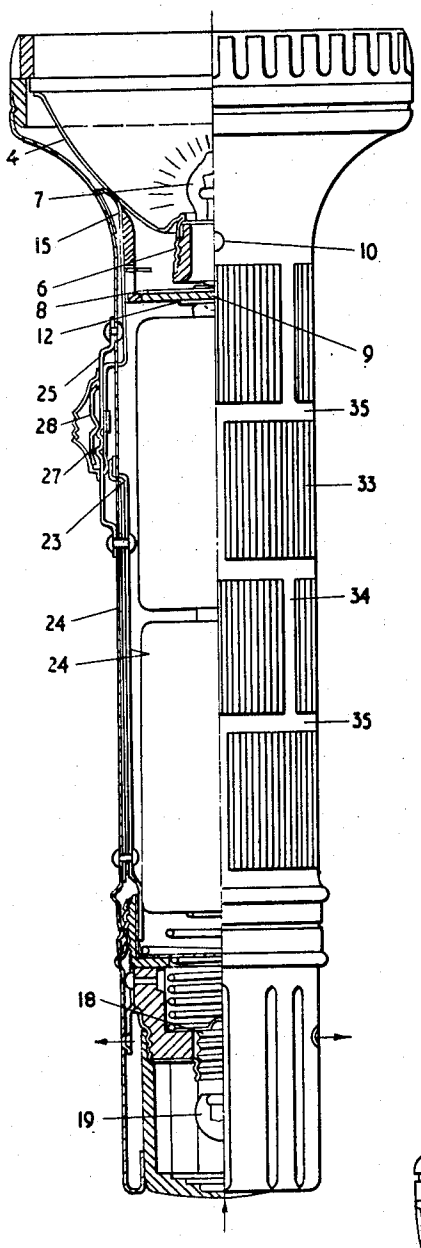

FIG.2

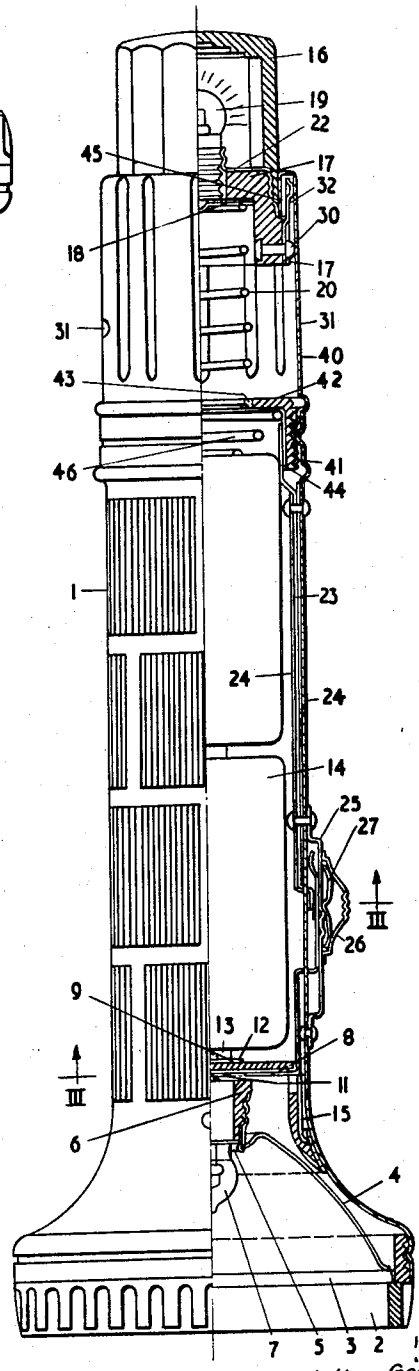

FIG.1

INVENTOR
Wing Gee Cheng
By Hokanson, Mitchell & Christie
ATTORNEYS

April 26, 1960 WING G. CHENG 2,934,635

PORTABLE ILLUMINATING DEVICE

Original Filed June 22, 1956 2 Sheets-Sheet 2

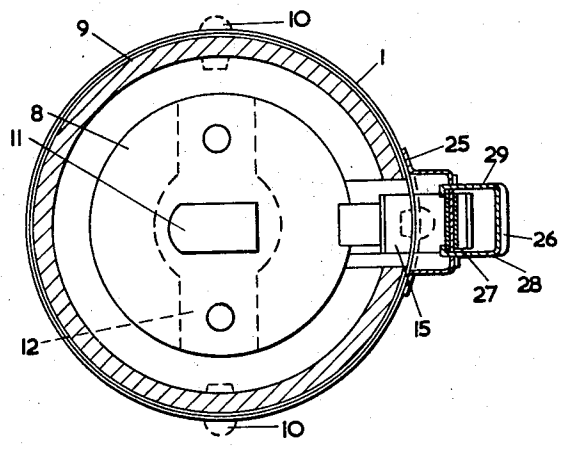

FIG. 3

INVENTOR
Wing Gee Cheng
By Holcomb, Wetherill & Brisbois
ATTORNEYS

United States Patent Office 2,934,635 Patented Apr. 26, 1960

2,934,635

PORTABLE ILLUMINATING DEVICE

Wing G. Cheng, Kowloon, Hong Kong, assignor to Meyer Manufacturing Company Limited, Kowloon, Hong Kong

Original application June 22, 1956, Serial No. 593,256, now Patent No. 2,900,493, dated August 18, 1959. Divided and this application May 10, 1957, Serial No. 658,417

Claims priority, application Great Britain November 9, 1955

7 Claims. (Cl. 240—10.66)

This invention relates to portable electric illuminating devices of the kind supplied by a dry battery and usually termed electric torches.

In the specification of my co-pending patent application Serial No. 593,256, filed June 22, 1956, now Patent No. 2,900,493 issued August 18, 1959 (from which the present application has been divided out) I have described a device of the above kind fitted with a lamp bulb at each end and with contact arrangements and a switch co-operating therewith for selectively switching on either one of the lamp bulbs so that the device can be used when desired either as an ordinary electric torch or by standing the device on one end as a table lamp the lower end then being extinguished whilst the lamp at the top end in illuminated.

The object of the present invention is to provide a device of the kind referred to which can also be used either as a hand torch or as a table lamp and in which the construction is such that the overall length can be reduced when the device is being carried, as when it is being used as a hand torch.

With the foregoing object in view a portable electric illuminating device of the kind referred to made in accordance with the present invention comprises a tubular body, two transverse partitions disposed respectively adjacent the two ends of said tubular body to divide the interior thereof into a central battery receiving compartment and two end compartments, two lamp bulbs mounted, respectively, one in each of said two end compartments, one of said lamp bulbs being intended for use as a table lamp, means comprising a movable switch member for selectively connecting either of said two lamp bulbs to the battery located in said central compartment of said tubular body, or for disconnecting both of said lamp bulbs from said battery, a translucent cap in which said table lamp bulb is fixedly mounted, means for slidably mounting said translucent cap with said table lamp bulb mounted therein into and out of the end compartment, in which said table lamp is mounted, and means for limiting the movement of said translucent cap into and out of said end compartment.

One construction of portable electric illuminating device of the kind referred to made in accordance with the invention is illustrated in the accompanying drawings in which:

Fig. 1 is a view in elevation partly in section illustrating the device adjusted for use as a table lamp;

Fig. 2 is a similar view but showing the device as adjusted for use as a hand torch, and

Fig. 3 is a cross section taken on line III—III, Fig. 1.

The device illustrated in the drawings comprises a substantially cylindrical body 1 of aluminum or other suitable metal, one end of which is flared or extended to form a base or foot. This end of the body 1 is provided with a ring member 2 of moulded plastic or other suitable material serving to secure in position a lens or cover glass 3 and a parabolic reflector 4, the ring member 2 being

screw threaded into the flared lower end of the body 1 as indicated.

A screw threaded metal lamp shell 5 is mounted in the apex of the reflector 4 and encloses a plastic lamp bulb holder 6 for the lower lamp bulb 7. When this lamp bulb is in position in the holder 6, its outer terminal or shell 5 is in electrical contact with the reflector 4, while the centre pin or terminal or the lamp bulb abuts against a metal disc 8 mounted on the lower face of a plastic cup 9. As shown more clearly in Fig. 3 the cup 9 is secured in the body 1 by rivets 10 and the disc 8 is provided with a stamped out tongue 11 engaging with the central pin of the lamp bulb 7.

A metal strip 12 is mounted on the upper face of the cup 9, the positive terminal or stud 13 of a dry battery 14 contained in the body 1 abutting against the strip 12. The disc 8 and the strip 12 are electrically connected together and secured to the cup 9 by means of rivets and the side wall of the cup 9 has a rectangular slot, as shown in Fig. 3, to accommodate a metal slider 15, which is arranged to make electrical contact in one of its extreme positions with the reflector 4, or, in its other extreme position with the disc 8, the slider, when in its intermediate position, not affecting either of these contacts.

The opposite end of the tubular body is fitted with a tubular metal extension 40 having an external screw thread at one end which engages with an internal screw thread 41 near the end of the tubular body 1. The inner end of this tubular extension is closed by a plastic cup 42 having a central aperture 43 and having secured to its under surface an unapertured metal cup 44. The outer edge of the extension 40 is turned over inwardly as shown at 45. Slidably mounted inside the extension 40 is a cup 17 made of insulating material and secured to a cylindrical cap 16 of transparent plastic or other suitable material, this cap constituting a shade or lens for a lamp bulb 19, the metal shell or outer terminal of which is screw threaded into a metal shell or socket 22 which is electrically connected to the wall of the extension 40 by means of a metal contact strip 32 secured to the side of the cap 17 by a rivet 30, the head of which projects beyond the strip 32. A metal contact plate 18 is secured to the inner surface of the cup 17 the arrangement being such that when the lamp 19 is screwed into its socket 22 the inner terminal of the lamp is in electric contact with the plate 18.

The cap 16 and cup 17 and parts carried thereby are slidingly mounted in the extension 40 and are constantly pressed into the extended position shown in Fig. 1 by a spring 20 one end of which bears against the plate 18 and the other end of which penetrates the aperture 43 in the cup and bears against the outer surface of the contact plate 18. The slidably mounted parts referred to can be retracted into the extension 40 against the spring pressure and held in this retracted position by engagement of the projecting head of the rivet in an aperture 31. In the construction illustrated two such apertures 31 are provided and disposed diametrically opposite each other, the second aperture 31 being engaged in the retracted position by a second rivet 30 not shown in the drawings. Outward movement of the slidable parts in the extended position is limited by contact between a shoulder formed on the outer periphery of the cup 17 and the turned over end 45 of the extension 40.

A second spring 46 is disposed so as to bear at one end against the inner surface of the cup 44 and against the negative terminal of the battery 14.

One end of a metal strip 23 is connected to the cup 44, this strip extending along the interior of the body 1 and being insulated therefrom as inidcated at 24. The switch controlling the supply of current to the lamps 7 and 19 is housed in a casing 25 fixed on the body 1, a

push button or knob **26** being slidably mounted on the casing **25**. Within the casing **25** is a spring member **27** having a projection at its centre. The button **26** is provided with two arms **28**, **29** (see Fig. 3) which extend through slots in the casing **25** and are secured to the slider **15** which is operated by the button **26**.

The outer surface of the cylindrical body **1** is formed with a plurality of fine vertically extending flutes or grooves **33** interrupted by relatively wide and smooth vertical bands **34** and circumferential bands **35**, which, in addition to providing an attractive appearance, also enable a good slip-free hand grip.

The operation of the device is as follows:

When the device is not in use and neither lamp is illuminated the push button **26** is in a neutral position intermediate the two "on" positions shown respectively in Figs. 1 and 2. When the push button is moved towards the cylindrical extension **40** into the "on" position to illuminate the lamp **19** for use as a table lamp, i.e. in the position shown in Fig. 1, the circuit of the lamp **19** is completed from the positive terminal **13** of the battery **14**, through the strip **11** and disc **8**, the slider **15**, the body **1**, extension **40**, strip **32**, socket **22**, the outer shell of the lamp **19**, the lamp filament, the inner lamp terminal, the plate **18**, spring **20**, metal cup **44**, and the spring **46** to the negative terminal of the battery **14**.

When on the other hand the device is to be used in the ordinary way as a hand torch the push button is moved in the opposite direction into the position shown in Fig. 2, so that a circuit is completed from the positive terminal **13** of the battery **14**, through contact strip **12**, disc **8**, the central pin of lamp **7**, the lamp filament, the outer shell of the lamp, reflector **4**, slider **15**, strip **23**, cup **44**, and spring **46** to the negative terminal of the battery **14**.

What I claim and desire to secure by Letters Patent is:

1. A portable electric illuminating device comprising a tubular body, two transverse partitions disposed respectively adjacent the two ends of said tubular body to divide the interior thereof into a central battery receiving compartment and two end compartments, two lamp bulbs mounted, respectively, one in each of said two end compartments, one of said lamp bulbs being intended for use as a table lamp, means comprising a movable switch member having two "on" positions and an "off" position for selectively connecting either of said two lamp bulbs to the battery located in said central compartment of said tubular body, or for disconnecting both of said lamp bulbs from said battery, a translucent cap in which said table lamp bulb is fixedly mounted, means for slidably mounting said translucent cap with said table lamp bulb mounted therein into and out of the end compartment in which said table lamp is mounted, and means for limiting the movement of said translucent cap into and out of said end compartment.

2. A device as claimed in claim 1 further comprising a lamp bulb support member secured to the inner end of said cap so as to be movable therewith and means for mounting said table lamp bulb on said support member.

3. A device as claimed in claim 1 further comprising a cup shaped lamp bulb support member made of insulating material secured to the inner end of said cap so as to be movable therewith, said support member being formed with a tapped aperture to receive said table lamp bulb, and means for retaining said cap and said support member in the retracted position.

4. A device as claimed in claim 1 in which said table lamp bulb is formed with a screw-threaded shell, further comprising a cup shaped lamp bulb support member made of insulating material secured to the inner end of said

cap, said support member being formed with a tapped aperture to receive said screw threaded shell of said table lamp bulb, and means for retaining said cap and said support member in a fully retracted position in the end compartment in which it is mounted, said means comprising at least one radial projection from the wall of said cup-shaped member and at least one aperture in the wall of said tubular body, which aperture is engaged by said projection when said table lamp bulb is in the fully retracted position.

5. A device as claimed in claim 1 also comprising a cup-shaped lamp bulb support member secured to the inner end of said cap so as to be movable therewith and further in which said means for limiting the movement of said translucent cap into and out of said end compartment comprises at least one stop depending from the open end of said tubular body, said stop being disposed so as to be contacted by said cup-shaped member when the latter is in its outermost position.

6. A device as claimed in claim 1 also comprising a cup-shaped lamp bulb support member secured to the inner end of said cap so as to be movable therewith and further in which said means for limiting the movement of said translucent cap into and out of said end compartment comprises at least one stop depending from the open end of said tubular body, said stop being disposed so as to be contacted by said cup-shaped member when the latter is in its outermost position, and further comprising spring means for pressing said cup-shaped member against said stop when said cup-shaped member is in its outermost position, said spring means forming part of the electric circuit between said dry battery and said table lamp bulb, and means for electrically connecting said table lamp bulb to the casing of said tubular member.

7. A device as claimed in claim 1 also comprising a cup-shaped lamp bulb support member secured to the inner end of said cap so as to be movable therewith and further in which said table lamp bulb is formed with a screw threaded shell and said means for limiting the movement of said translucent cap into and out of said end compartment comprises at least one stop depending from the open end of said tubular body, said stop being disposed so as to be contacted by said cup-shaped member when the latter is in its outermost position, and further comprising spring means for pressing said cup-shaped member against said stop when said cup shaped member is in its outermost position, said spring means forming part of the electric circuit between said dry battery and said table lamp bulb, and means for electrically connecting said table lamp bulb to the casing of said tubular member, said last mentioned means comprising a first electric contact strip in contact with the shell of said lamp, and a second electric contact strip secured on said cup-shaped insulating member so as to be in electrical contact with said first contact strip and with the casing of said tubular member.

References Cited in the file of this patent

UNITED STATES PATENTS

1,674,650	Leser	June 26, 1928
2,049,762	Darling et al.	Aug. 4, 1936
2,181,447	Ayotte et al.	Nov. 28, 1939
2,212,103	Rothenberg et al.	Aug. 20, 1940
2,538,332	Schaefer	Jan. 16, 1951
2,681,979	Manoloff	June 22, 1954
2,796,515	Waskie	June 18, 1957

FOREIGN PATENTS

1,045,860	France	July 1, 1953
700,958	Great Britain	Dec. 16, 1953